Gregg Residence

786 Aspen Bluff Lane - Lot 14 Red Sky Ranch
Wolcott, Colorado

Permit - 07/27/2018

CODE INFORMATION:
ALL WORK WILL BE COMPLETED IN ACCORDANCE WITH THE LATEST ADOPTED EDITIONS OF THE:
2015 INTERNATIONAL BUILDING CODE
2015 INTERNATIONAL RESIDENTIAL CODE
2015 INTERNATIONAL FIRE CODE
2015 INTERNATIONAL PLUMBING CODE
2015 INTERNATIONAL MECHANICAL CODE
2015 INTERNATIONAL FUEL GAS CODE
2015 INTERNATIONAL ENERGY CONSERVATION CODE

OCCUPANCY CLASS:
GROUP R3/310.5

TYPE OF CONSTRUCTION:
TYPE VB/602.5 WITH FIRE SUPPRESSION SYSTEM
SEPARATIONS PER R302.5

CLIMATE ZONE:
6B PER N1101.7

THERMAL ENVELOPE:
Prescriptive Method - Equals exterior walls & roof or ceilings @ trusses.

PROJECT INFO:
LOCATION:
786 Aspen Bluff Lane
Lot 14 Red Sky Ranch
Wolcott, Colorado

DATUM REFERENCE:
T.O. Plywood 100'-0" = 7833' USGS
LOT ACREAGE - 1.053 Acres
OF STORIES - 2

WILDFIRE:
Moderate Rating

PROJECT DIRECTORY:
OWNER:
Jim & Laurie Gregg
786 Aspen Bluff Lane
Lot 14 Red Sky Ranch
Wolcott, Colorado

ARCHITECT:
NDG Architecture
PO Box 634
Edwards, Co 81632
(970) 471-0698
Bill Nutkins, AIA
bnutkins@ndg-inc.com

STRUCTURAL ENGINEER:
Anderson Structural Engineering
823 Grand Ave.
Suite 340
Glenwood Springs, Co 81602
landon@anderson-structural.com

SHEET INDEX

Sheet Number	Sheet Name
A000	COVER
A001	GENERAL NOTES AND SCHEDULES
A002	SQUARE FOOTAGE CALC
C1	ENGINEERED GRADING AND DRAINAGE PLAN
A101	ARCHITECTURAL SITE GRADING PLAN
A102	LANDSCAPE PLAN
A200	MAIN LEVEL - OVERALL
A201	MAIN LEVEL - NORTH
A202	MAIN LEVEL - SOUTH
A203	UPPER LEVEL
A204	ROOF PLAN - OVERALL
A205	ROOF PLAN - NORTH
A206	ROOF PLAN - SOUTH
A207	MECHANICAL LEVEL PLAN
A301	EXTERIOR ELEVATIONS
A302	EXTERIOR ELEVATIONS
A303	EXTERIOR ELEVATIONS
A304	EXTERIOR ELEVATIONS
A401	BUILDING SECTIONS
A402	BUILDING SECTIONS
A601	MAIN LEVEL RCP - NORTH
A501	DETAILS
A502	DETAILS
A602	MAIN LEVEL RCP - SOUTH
A603	UPPER LEVEL RCP
S1.0	GENERAL NOTES
S1.1	FOUNDATION PLAN
S1.2	MAIN LEVEL FRAMING PLAN
S1.3	UPPER LEVEL FRAMING PLAN
S1.4	ROOF FRAMING PLAN
S5.1	SECTIONS AND DETAILS
S5.2	SECTIONS AND DETAILS
S5.3	SECTIONS AND DETAILS
S5.4	SECTIONS AND DETAILS
S5.5	SECTIONS AND DETAILS
S5.6	SECTIONS AND DETAILS
E101	MAIN LEVEL ELECTRICAL - NORTH
E102	MAIN LEVEL ELECTRICAL - SOUTH
E103	UPPER LEVEL ELECTRICAL
RADON	RADON PLAN

NDG NUTKINS DESIGN GROUP

STATE OF COLORADO
WILLIAM E. NUTKINS JR.
403359
SEAL
LICENSED ARCHITECT

Gregg Residence
786 Aspen Bluff Lane - Lot 14 Red Sky Ranch
Wolcott, Colorado

Job #
2013-006

Issue Date
Permit - 07/27/2018

COVER

Revision	No.	Date

A000

7/27/2018 1:47:55 PM D:\NDG\Gregg\Gregg - MainCurrent 7-27.rvt

MAIN LEVEL WINDOW SCHEDULE

Mark	Window Type	Height	Width	Head Height	Handing	Mulled Unit	Egress	Comments
101	Clad Ultimate Casement Picture Unit	2' - 0"	6' - 0"	8' - 0"		No	No	
102	Casement	5' - 0"	3' - 0"	8' - 0"		No	No	
103	Casement	5' - 0"	3' - 0"	8' - 0"		No	No	
104	Awning	2' - 0"	3' - 0"	8' - 0"		No	No	
105	Clad Ultimate Casement	5' - 0"	2' - 8"	8' - 0"		Yes	Yes	
106	Clad Ultimate Casement	5' - 0"	2' - 8"	8' - 0"		Yes	Yes	
107	Clad Ultimate Casement	5' - 0"	2' - 8"	8' - 0"		Yes	Yes	
108	Clad Ultimate Casement	5' - 0"	2' - 8"	8' - 0"		Yes	Yes	
109	Clad Ultimate Casement Picture Unit	2' - 0"	8' - 0"	8' - 0"		No	No	
110	Clad Ultimate Awning	2' - 6"	2' - 6"	8' - 0"		No	No	
111	Clad Ultimate Casement Picture Unit	2' - 0"	8' - 0"	8' - 0"		No	No	
112	Clad Ultimate Casement Picture Unit	7' - 0"	7' - 0"	9' - 0"		Yes	No	
113	Clad Ultimate Awning	2' - 0"	3' - 6"	2' - 0"		Yes	No	Tempered
114	Clad Ultimate Awning	2' - 0"	3' - 6"	2' - 0"		Yes	No	Tempered
115	Clad Ultimate Casement Picture Unit	7' - 0"	7' - 0"	9' - 0"		Yes	No	Tempered
116	Clad Ultimate Awning	2' - 0"	3' - 6"	2' - 0"		Yes	No	Tempered
117	Clad Ultimate Awning	2' - 0"	3' - 6"	2' - 0"		Yes	No	Tempered
118	Clad Ultimate Casement Picture Unit	7' - 0"	7' - 0"	9' - 0"		Yes	No	Tempered
119	Clad Ultimate Awning	2' - 0"	3' - 6"	2' - 0"		Yes	No	Tempered
120	Clad Ultimate Awning	2' - 0"	3' - 6"	2' - 0"		Yes	No	Tempered
121	Casement	5' - 0"	3' - 0"	8' - 0"		No	No	
122	Casement	5' - 0"	3' - 0"	8' - 0"		No	No	
123	Clad Ultimate Casement Picture Unit	7' - 0"	5' - 0"	9' - 0"		Yes	No	Tempered/See Elevations
124	Clad Ultimate Casement Picture Unit	4' - 0"	5' - 0"	13' - 0"		Yes	No	
124	Clad Ultimate Casement Picture Unit	7' - 0"	8' - 0"	9' - 0"		Yes	No	
126	Clad Ultimate Casement Picture Unit	4' - 0"	8' - 0"	13' - 0"		Yes	No	
127	Clad Ultimate Casement Picture Unit	7' - 0"	5' - 0"	9' - 0"		Yes	No	
128	Clad Ultimate Casement Picture Unit	4' - 0"	5' - 0"	13' - 0"		Yes	No	
130	Clad Ultimate Casement Picture Unit	5' - 0"	9' - 0"	8' - 0"		Yes	No	Triple Slider
132	Awning	2' - 6"	3' - 0"	10' - 6"		No	No	
133	Casement	4' - 6"	3' - 0"	8' - 0"		No	No	Tempered
134	Clad Ultimate Casement Picture Unit	8' - 0"	6' - 0"	8' - 0"		Yes	No	
135	Clad Ultimate Casement Picture Unit	8' - 0"	6' - 0"	8' - 0"		Yes	No	Tempered
136	Clad Ultimate Casement Picture Unit	8' - 0"	4' - 0"	8' - 0"		Yes	No	Tempered
137	Clad Ultimate Casement Picture Unit	8' - 0"	4' - 0"	8' - 0"		Yes	No	Tempered
138	Casement	5' - 0"	3' - 0"	8' - 0"		No	Yes	
139	Clad Ultimate Casement Picture Unit	2' - 0"	8' - 0"	8' - 0"		No	Yes	
140	Casement	5' - 0"	3' - 0"	8' - 0"		No	Yes	
141	Casement	5' - 0"	3' - 0"	8' - 0"		No	No	
142	Casement	5' - 0"	2' - 6"	8' - 0"		No	No	Tempered
143	Clad Ultimate Casement Picture Unit	5' - 0"	5' - 0"	8' - 0"		No	No	
144	Casement	5' - 0"	2' - 6"	8' - 0"		No	No	
145	Casement	5' - 0"	3' - 0"	8' - 0"		No	No	
146	Clad Ultimate Casement	3' - 5 1/8"	3' - 0"	8' - 0"		No	No	
147	Clad Ultimate Casement	3' - 5 1/8"	3' - 0"	8' - 0"		No	No	
148	Clad Ultimate Casement	3' - 5 1/8"	3' - 0"	8' - 0"		No	No	
149	Clad Ultimate Casement Picture Unit	2' - 0"	4' - 6"	8' - 0"		No	No	
150	Clad Ultimate Casement Picture Unit	8' - 0"	6' - 0"	8' - 0"		No	No	Tempered
151	Casement	7' - 0"	3' - 0"	9' - 0"		Yes	No	Tempered
152	Awning	2' - 0"	3' - 0"	2' - 0"		Yes	No	Tempered
153	Clad Ultimate Casement Picture Unit	7' - 0"	6' - 0"	9' - 0"		Yes	No	Tempered
154	Awning	2' - 0"	3' - 0"	2' - 0"		Yes	No	Tempered
155	Awning	2' - 0"	3' - 0"	2' - 0"		Yes	No	Tempered
156	Casement	7' - 0"	3' - 0"	9' - 0"		Yes	No	Tempered
157	Awning	2' - 0"	3' - 0"	2' - 0"		Yes	No	Tempered
158	Casement	5' - 0"	3' - 0"	8' - 0"		No	No	
160	Clad Ultimate Casement Picture Unit	2' - 6"	9' - 0"	10' - 6"		Yes	No	
164	Awning	2' - 6"	3' - 0"	10' - 6"		No	No	

UPPER LEVEL WINDOW SCHEDULE

Mark	Window Type	Height	Width	Head Height	Handing	Mulled Unit	Egress	Comments
201	Casement	5' - 0"	3' - 0"	6' - 8"		Yes	No	
202	Casement	5' - 0"	3' - 0"	6' - 8"		Yes	No	
203	Clad Ultimate Casement Picture Unit	5' - 0"	8' - 0"	6' - 8"		No	No	Tempered
204	Casement	5' - 0"	3' - 0"	6' - 8"		Yes	No	
205	Casement	5' - 0"	3' - 0"	6' - 8"		Yes	No	
206	Clad Ultimate Casement	3' - 11 1/8"	3' - 0"	6' - 8"		No	Yes	
207	Clad Ultimate Awning	2' - 6"	2' - 6"	6' - 8"		No	No	
209	Clad Ultimate Casement Picture Unit	2' - 6"	6' - 0"	6' - 8"		No	No	
210	Clad Ultimate Casement Picture Unit	2' - 6"	6' - 0"	6' - 8"		No	No	
211	Clad Ultimate Casement Picture Unit	2' - 6"	6' - 0"	6' - 8"		No	No	
212	Clad Ultimate Awning	2' - 6"	2' - 6"	6' - 8"		No	No	
213	Clad Ultimate Casement	3' - 11 1/8"	3' - 0"	5' - 7 1/8"		No	Yes	

GENERAL NOTES:
1. Do not scale drawings.
2. Dimensiosn to face of stud and/or concrete Dimensiosn to face of stud and/or concrete foundation unless noted otherwise.
3. Thorough effort is made to provide a complete and clear set of construction documents. In the case of discrepancies, ommisions, or missing information required to complete construction Contractor to contact Architect and.or Engineer for clarification.
4. Radon Mitigation system to be installed per Appendix F of the 2015 IRC and attached drawings.
5. Contractor to provide shop drawings for review by Engineer/Architect/Interior Designer for the following but not limited to: steel beams, steel columns, steel connections, casework.
6. Refer to manufactures shop drawings for exact window and door rough openings.

WALL STYTEMS:
1. Typical foundation wall to W-1, u.n.o.
2. Typical exterior wall to be Type W-2, u.n.o.
3. Typical furring wall to be W-3, u.n.o.
4. Typical interior walls to be either W-4 or W-5, u.n.o.
5. Typical double wall to be W-6, u.n.o.

FLOOR SYSTEMS:
1. Garage : Slab on Grade over 1-1/2" extruded polystyrene slab insulationfully taped on 6 mil. vapor barrier - See Structural for slab requirements
2. Main & Upper Levels: 3/4" t&g plywood sheathing on floor joists, RE: Structural. Main floor to have R-30 batt insulation below.

ROOF SYSTEMS:
1. R-1 - CeDUR Synthetic shake, multi-width & staggered on "W.R. Grace Ice and Water Shield" membrane on 5/8" CDX plywood sheathing on roof joists (RE: Structural), with 14" of blown-in batt full cavity to produce a minimum of R-50.
2. R-2 - Cor-ten Standing Seam Roof on "W.R. GraceHigh-Temp Ice and Water Shield" membrane on 5/8" CDX plywood sheathing on roof joists (RE: Structural), with 14" of blown-in batt full cavity to produce a minimum of R-50.

FRAMING NOTES:
1. Provide all necessary blocking in stud cavities in walls and ceiling for the following locations, but not limited to, toilet and bath accessories, wall and ceiling mounted electrical fixtures, window treatments, closet rod and shelf, cabinetry, and countertops.
2. All interior sill plates on concrete to be pressure treated.
3. All exterior sill plates on concrete to be pressure treated to be seperated from concrete with DOW - sill seal.
4. Any gaps between sill plate and concrete greater than 1/4" to be shimmed w/ metal shims and to be foamed with expanding urethane.
5. Framing gaps not able to be insulated to be foamed with expanding urethane spray foam.
6. Window and Door Jamb gaps to be foamed with expanding urethane spray foam.
7. All steel located below and exposed to grade to be coated with bituminous damproofing.

DRYWALL AND PAINT:
1. All drywall to be shimmed and screwed.
2. Drywall to have a Level 4 finish min. No joints, tape marks, screw heads, or patches should be visible.
3. Drywall texture to be selected by Owner.
4. Drywall corners and transitions to have square corner trim & moulding.
5. Paint to be of high quality acrylic, 2 coats over 1 coat latex primer.

MECHANICAL & PLUMBING NOTES:
1. All Mechanical Systems to be design-build.
2. Contractor to coordinate with Holland Creek Metro District for connection to sanitary waste system.
3. Coordinate all mechanical to fit within ceiling, floor, and wall cavity spaces.
4. Primary heating: Forced Air w/ Air Conditioning. Furnace to have min 95% efficiency rating. The following rooms to recieve in-floor electrica heat mat: Master Bath and Main Level Guest Bath.
5. Plumbing fixtures and fittings to be chosen by Owner. All finishes are to be the same as main fitting or adjacent fittings.
6. Hot water should be on an insulated hot water re-circulation line and pump.
7. Drain lines running in walls adjacent to living spaces to be in cast iron, transitioning to PVC below in crawl space.
8. Supply lines should be properly sized and run independently as required to prevent temperature change at the shower when other plumbing fixtures are being used.
9. Supply lines whether in-floor or wall, drain traps, or outlets should not be located as to interfere with roll out shelves in base cabinets.
10. Mechanical sub-contractor to provide the following information when applying for permit:
    a. Design Criteria
    b. System specs, including equipment types, sizes, and efficiencies.
    c. Equipment and system controls specification/cut sheets.

Fire Suppression Sytem:
1. Fire Suppresion System to be Design Build.
2. Fire Suppression sub-contractor to calculate required water storage for system.
3. Submit detailed locationof heads to Architect and Interior Designer for review and approval.
4. Sprinkler head covers to be factry painted to match adjacent ceiling. Dark Bronze covers to be used in wood ceilings.

Radon Mitigation
Install passive radon mitigation in crawl space per Appendix F of 2015 IRC

GENERAL SYMBOLS

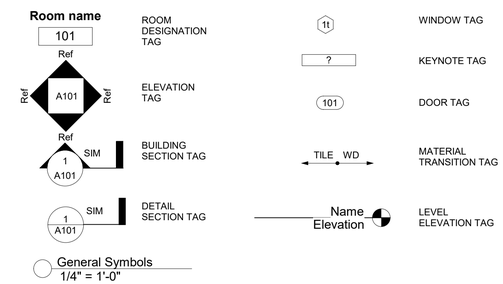

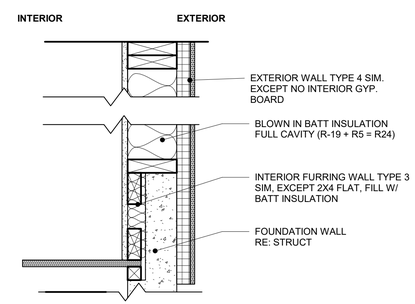

GUEST WING EXTERIOR FURRING WALL

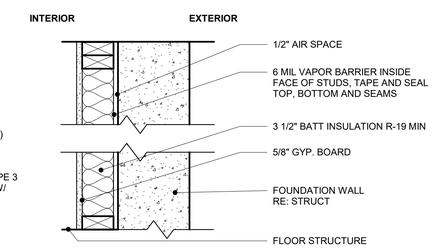

W-3: TYPICAL FURRING WALL

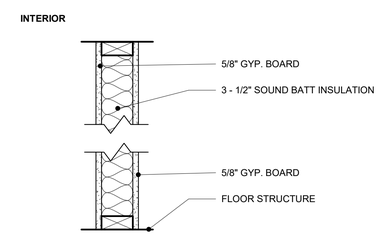

W-4: TYPICAL 2X4 INTERIOR WALL

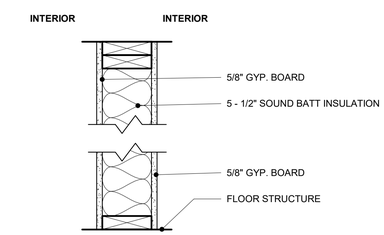

W-5: TYPICAL 2X6 INTERIOR WALL
- SUB DURAROCK IN WET AREAS

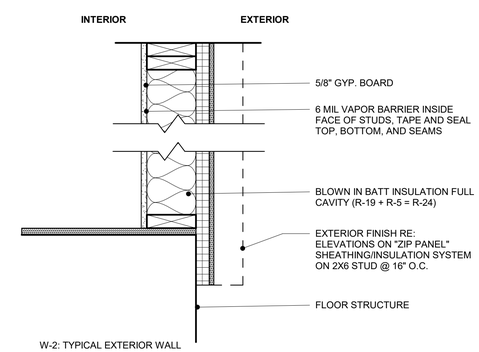

W-2: TYPICAL EXTERIOR WALL

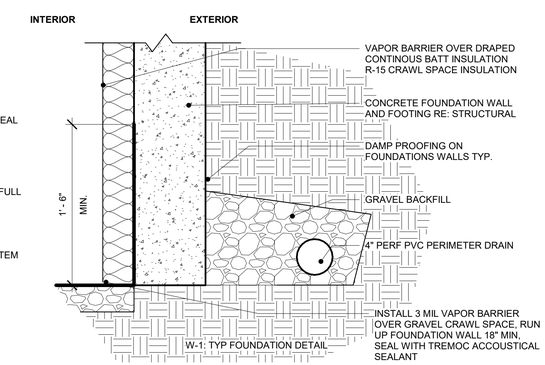

W-1: TYP FOUNDATION DETAIL

1 TYPICAL WALL TYPES
1 1/2" = 1'-0"

ABBREVIATIONS
AFF - ABOVE FINISHED FLOOR
ALUM - ALUMINUM
AB - ANCHOR BOLT
ARCH - ARCHITECT(URAL)
BM - BEAM
BRG - BEARING
BRD - BOARD
B.O. - BOTTOM OF
BLDG - BUILDING
CLG - CEILING
CL - CENTER LINE
C-C - CENTER TO CENTER
CPT - CARPET
COL - COLUMN
CONC - CONCRETE
CONT - CONTINUOUS, CONTINUE
CJ - CONTROL JOINT
DTL - DETAIL
DIAG - DIAGONAL
DIA - DIAMETER
DW - DISHWASHER
DWG - DRAWING
EA - EACH
ELEC - ELECTRIC(AL)
ELEV - ELEVATION
EXIST - EXISTING
EXP - EXPANSION
EXT - EXTERIOR
FD - FLOOR DRAIN
FG - FIBERGLASS
FF - FINISHED FLOOR
FT - FEET
FLUOR - FLUORESCENT
FP - FIREPLACE
GA - GAUGE
GYP - GYPSUM
GWB - GYPSUM WALL BOARD
HT - HEIGHT
HORZ - HORIZONTAL
HR - HOUR
HW - HOT WATER
INSUL - INSULATION/INSULATE
JT - JOINT
MFR - MANUFACTURER
MIN - MINIMUM
MAX - MAXIMUM
MECH - MECHANICAL
MTL - METAL
NO - NUMBER
OC - ON CENTER
OD - OUTSIDE DIAMETER
OSF - OUTSIDE FACE OF
PERF - PERFORATED
PL - PLATE
POLY - POLYETHYLENE
POLYST - POLYSTYRENE
PVC - POLYVINYL CHLORIDE
PSF - POUNDS PER SQUARE FOOT
PSI - POUNDS PER SQUARE INCH
REINF - REINFORCE (D), (ING)
RM - ROOM
SCH - SCHEDULE
SHT - SHEET
SIM - SIMILAR
SF - SQUARE FOOT
STL - STEEL
SPEC - SPECIFICATION
STN - STONE
STRUCT - STRUCTURAL
T&G - TONGUE & GROOVE
THK - THICK(NESS)
THRU - THROUGH
T.O. - TOP OF
TS - TUBE STEEL
TYP - TYPICAL
UNO - UNLESS NOTED OTHERWISE
VB - VAPOR BARRIER
VERT - VERTICAL
VEST - VESTIBULE
WD - WOOD
W/ - WITH
W/O - WITHOUT

NUTKINS DESIGN GROUP

STATE OF COLORADO
WILLIAM E. NUTKINS JR.
403359
SEAL
LICENSED ARCHITECT

Gregg Residence
786 Aspen Bluff Lane - Lot 14 Red Sky Ranch
Wolcott, Colorado

Job #
2013-006

Issue Date
Permit - 07/27/2018
DRB Final - 06/07/2018

GENERAL NOTES AND SCHEDULES

Revision	No.	Date

A001

7/27/2018 1:47:58 PM D:\NDG\Gregg\Gregg - MainCurrent 7-27.rvt

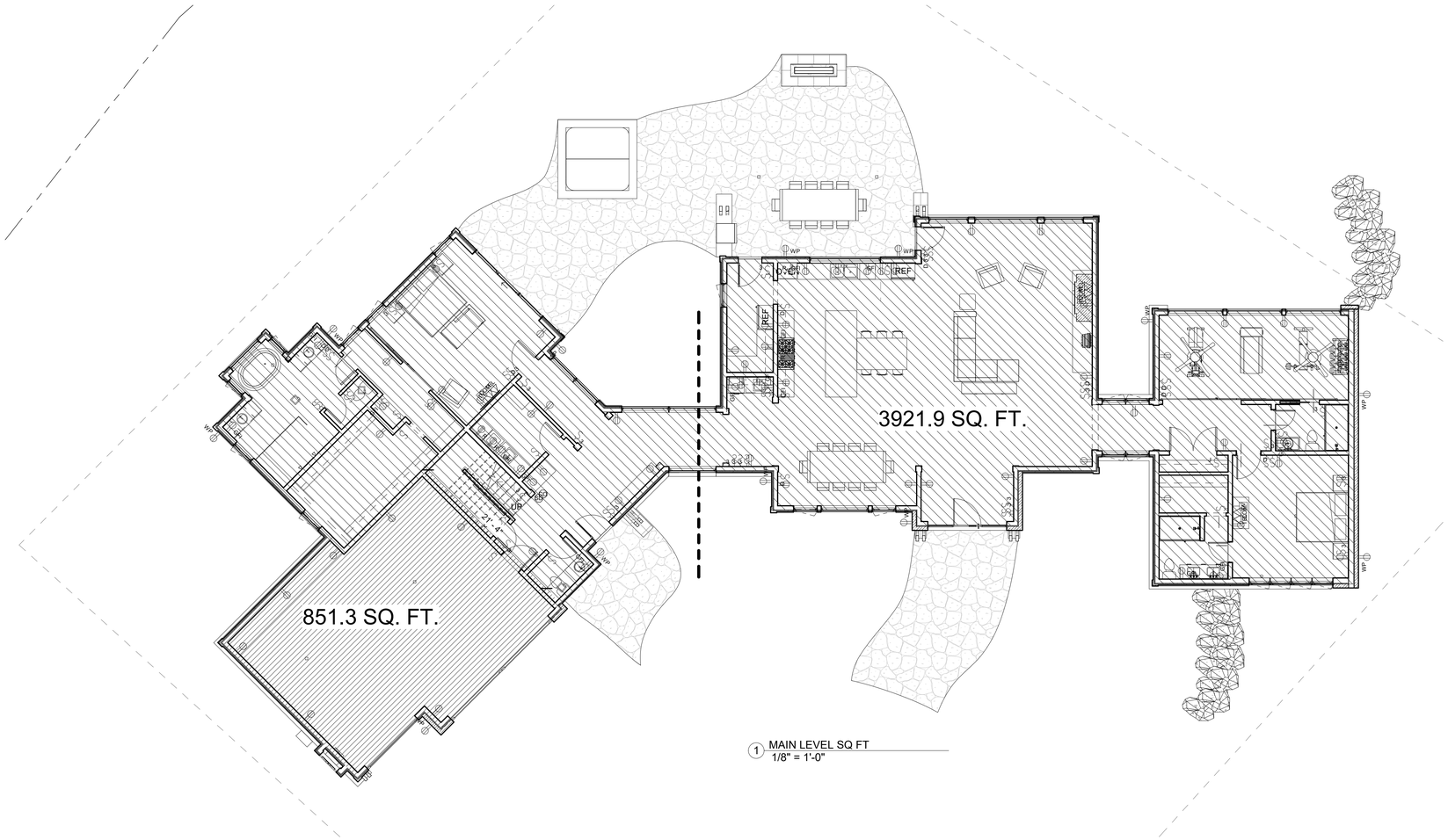

1 MAIN LEVEL SQ FT
1/8" = 1'-0"

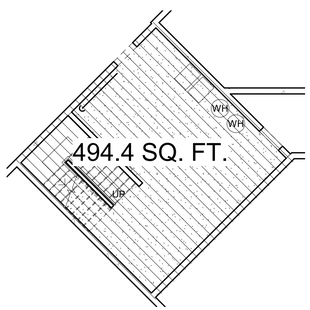

3 MECHANICAL SQ FT
1/8" = 1'-0"

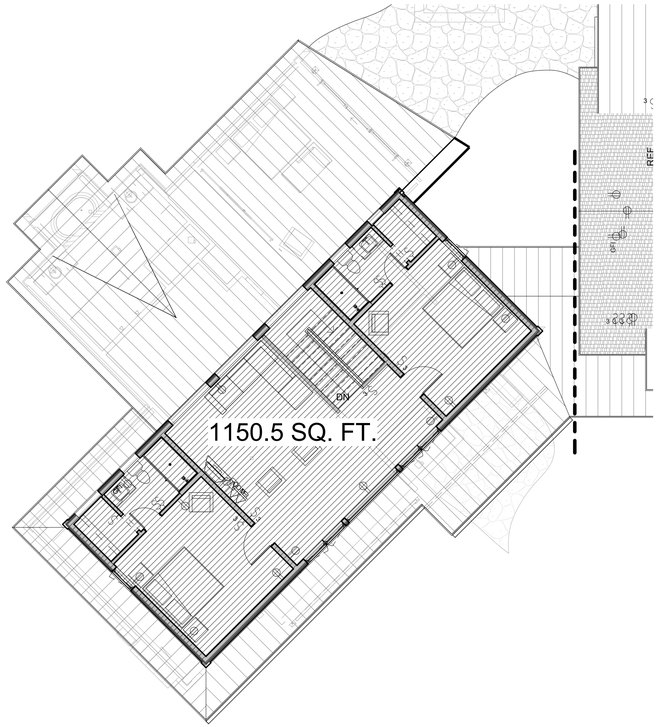

2 UPPER LEVEL SQ FT
1/8" = 1'-0"

7/27/2018 1:48:22 PM D:\NDG\Gregg\Gregg - MainCurrent 7-27.rvt

NUTKINS DESIGN GROUP

STATE OF COLORADO
WILLIAM E. NUTKINS JR.
403359
SEAL
LICENSED ARCHITECT

Gregg Residence

786 Aspen Bluff Lane - Lot 14 Red Sky Ranch
Wolcott, Colorado

Job #
2013-006

Issue Date
Permit - 07/27/2018
DRB Final - 06/07/2018

SQUARE FOOTAGE CALC

Revision	No.	Date

A002

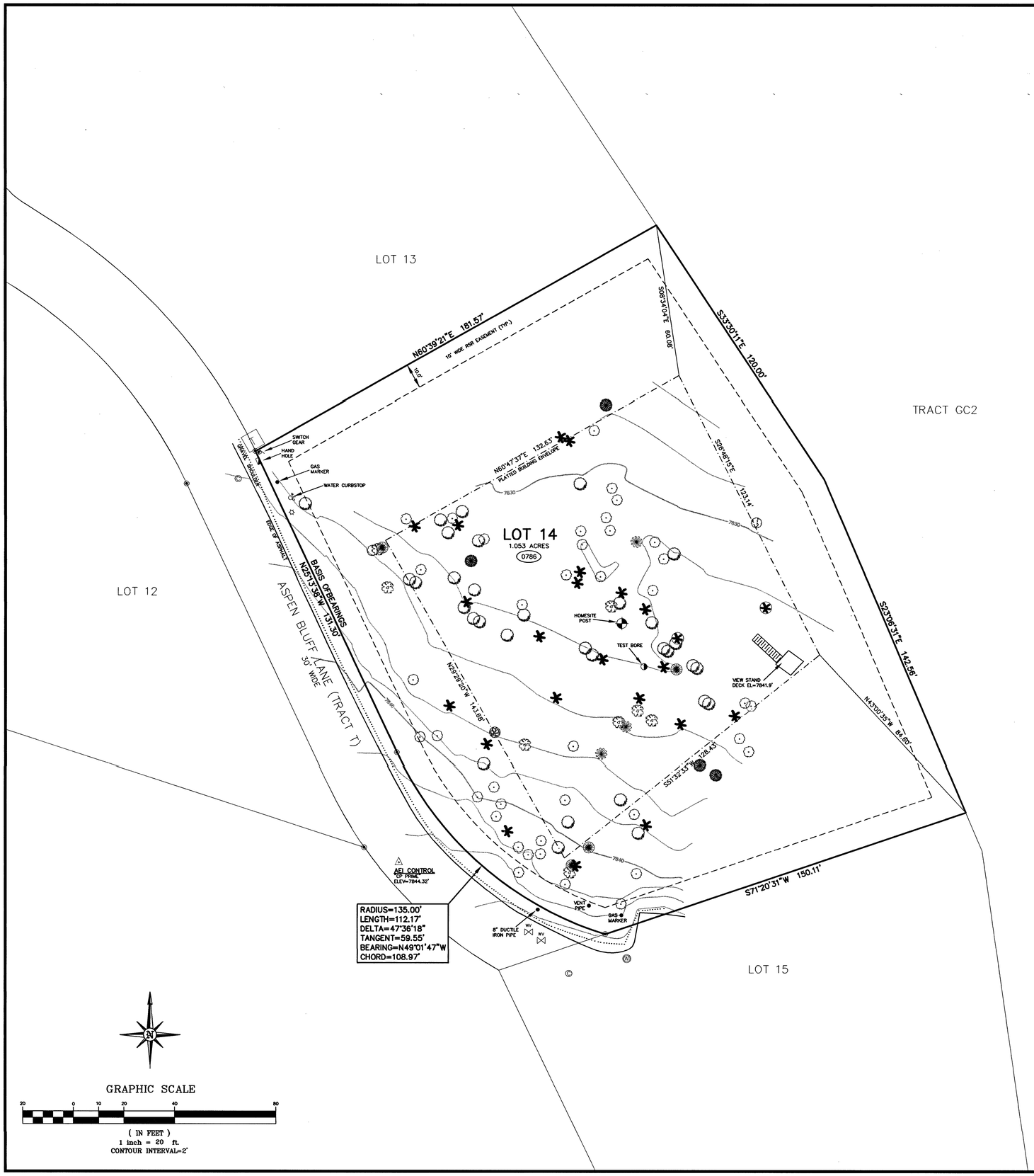

SURVEYOR'S NOTES

1. DATE OF SURVEY: OCTOBER 28, 2003.
2. BASIS OF BEARING: N25°13'38"W ALONG THE WESTERLY LINE OF LOT 14 BETWEEN FOUND SURVEY MARKERS AS SHOWN HEREON.
3. SEE LAND TITLE GUARANTEE COMPANY INC., COMMITMENT #V50003133 (DATED OCTOBER 24, 2003) FOR ALL TITLE INFORMATION.
4. ELEVATIONS ARE BASED ON EAGLE VALLEY SURVEYING, INC. VERTICAL CONTROL ESTABLISHED FROM NAVD 1988.
5. THE POSTED ADDRESS IS 0786 ASPEN BLUFF LANE.
6. ALL NOTES SET FORTH ON FINAL PLAT, RED SKY RANCH, RECEPTION No. 763566 ARE APPLICABLE.
7. THIS LOT WAS VACANT AT THE TIME OF THIS SURVEY.

SURVEYOR'S CERTIFICATE

I Dana B. Spigener a Registered Professional Land Surveyor in the State of Colorado, do hereby certify that this Survey is true and accurate to the best of my knowledge, information and belief, and that said survey is in accordance with applicable standards at the time of the survey. This certificate is not a guaranty or warranty, either expressed or implied.

Dana B. Spigener PLS #33655

11/4/03
Date

TREE LEGEND

- 4" ASPEN
- 6" ASPEN
- 8" ASPEN
- 10" ASPEN
- 12" ASPEN
- 4" PINYON
- 6" PINYON
- 8" PINYON
- 10" PINYON
- 12" PINYON

LEGEND

- WV — WATER VALVE
- WATER MANHOLE
- COMMUNICATION MANHOLE
- LIGHT POST
- T — ELECTRIC TRANSFORMER
- FOUND 5/8" RE-BAR AND ALUMINUM CAP. LS #16827

ALPINE ENGINEERING INC
EDWARDS BUSINESS CENTER • P.O. BOX 97
EDWARDS, COLORADO 81632
• 970 926-3373 • FAX 926-3390 •

TOPOGRAPHIC MAP
LOT 14
RED SKY RANCH
EAGLE COUNTY, COLORADO
RECEPTION No. 763566

NO.	DATE	REVISIONS
XX		

NOTICE: ACCORDING TO COLORADO LAW YOU MUST COMMENCE ANY LEGAL ACTION BASED UPON ANY DEFECT IN THIS SURVEY WITHIN THREE YEARS AFTER YOU FIRST DISCOVER SUCH DEFECT. IN NO EVENT MAY ANY ACTION BASED UPON ANY DEFECT IN THIS SURVEY BE COMMENCED MORE THAN TEN YEARS FROM THE DATE OF THE CERTIFICATION SHOWN.

SECTION 17, TOWNSHIP 4 SOUTH, RANGE 83 WEST OF THE 6th PRINCIPAL MERIDIAN

FIELD BOOK 377 PAGE 062

DRAWN BY: RDG CHECKED BY: DBS

DATE ISSUED: 11/04/03 JOB No. 30252

SHEET 1 OF 1

Z:\DWG\RED SKY\30252-L14topo.dwg, 11/04/03 10:10:28 AM, RAPHALPHA

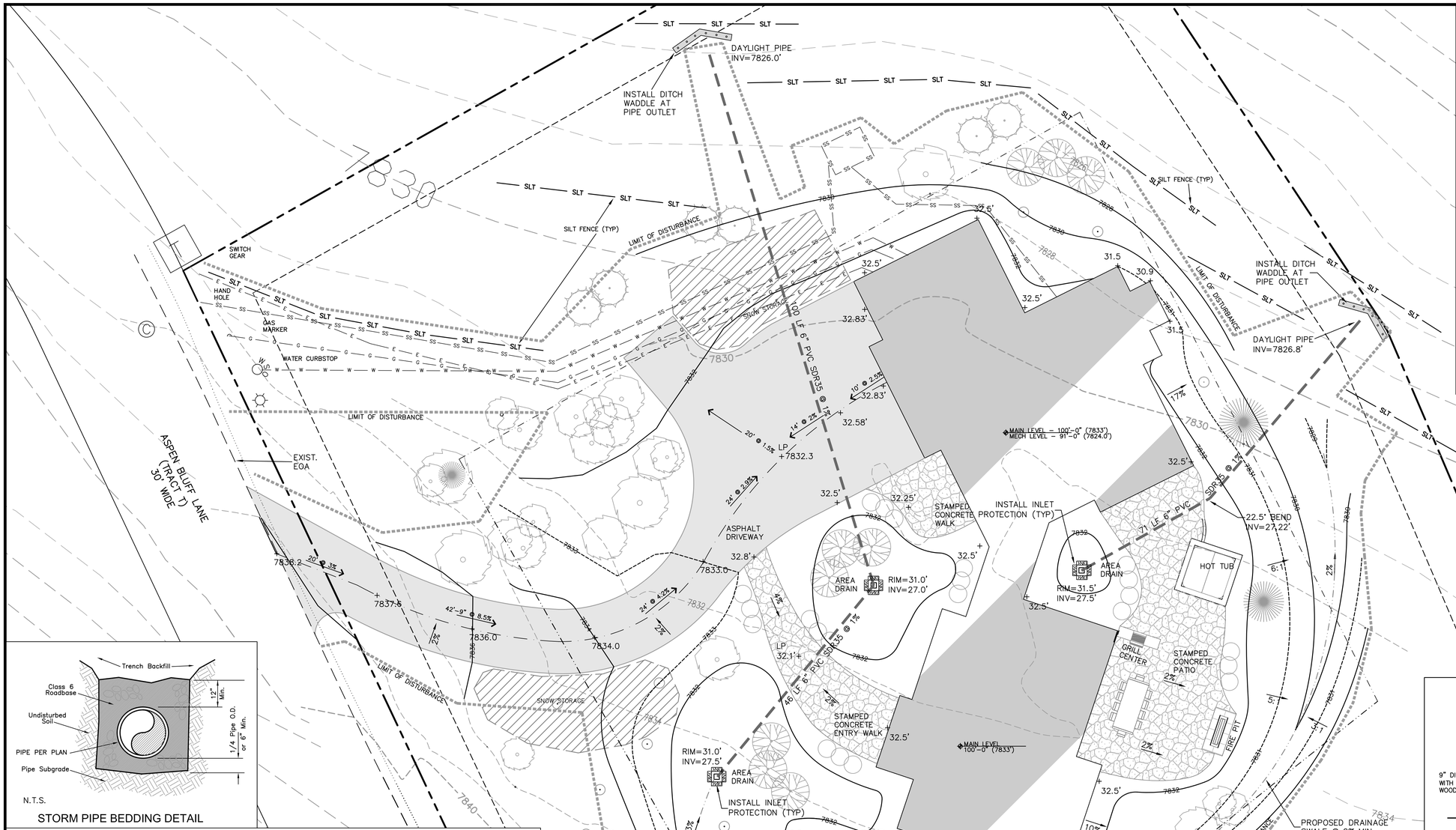

LEGEND

- PROPERTY LINE
- BUILDING ENVELOPE
- EASMENT LINE
- 7840 EXISTING CONTOUR
- PROPOSED CONTOUR
- LIMITS OF DISTURBANCE
- G GAS LINE
- SS SANITARY SEWER
- E ELECTRIC
- W WATER LINE
- T TELEPHONE
- PROPOSED BOULDER WALL
- SPOT ELEVATION
- STRAW LOG SEDIMENT CONTROL
- SLT SILT FENCE EROSION CONTROL

NOTES:
1) EXISTING CONTOURS AT PERIMETER OF LOT ARE BASED ON AERIAL MAPPING

STORM PIPE BEDDING DETAIL

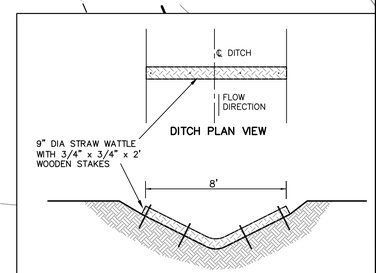

DITCH CROSS-SECTION

1. The height of a Straw Wattle is 9 in. The installed height is approximately 5–7 in. The standard length of Straw Wattles is 25 ft.
2. Straw Wattles should be installed in shallow trenches, 2–4 in. deep, depending on soil type and slope steepness. Dig the trench deeper for soft, loamy soils and steepest slopes; Dig the trench shallower for hard, rocky soils and gentler slopes. Use mattocks and shovel to dig the trench, throwing excavated soil to the uphill side to prevent runoff from undercutting the Wattle.
3. Install Wattle in perpendicular to flow direction.

DITCH WATTLE

GENERAL NOTES

1. Alpine Engineering, Inc., assumes no responsibility for utility locations. It is the Contractor's responsibility to field verify the location of all utilities prior to commencement of any construction.
2. The Contractor shall conform to all Red Sky Ranch construction rules and regulations.
3. The Contractor shall take all appropriate precautions to significantly reduce any potential pollution caused by his activities, including vehicle fueling, storage of fertilizers or chemicals, etc. The Contractor shall have identified procedures for handling potential pollutants and have identified spill prevention and response procedures prior to any activities at the project site.
4. Safety is the responsibility of the Contractor. The Engineer is not responsible for safety in, on, or about the project site, nor for compliance by the appropriate party with any regulations relating hereto.
5. It is the Contractor's responsibility to obtain (and conform to) all proper construction permits.
6. The Contractor shall minimize all off site tracking. All soil tracked off site shall be immediately cleaned up to the satisfaction of RSRMD and The Owner.
7. If any groundwater is encountered the Contractor shall contact Owner, Alpine Engineering, Inc., and the Project Geotechnical Engineer immediately.
8. The Contractor shall protect and preserve all trees, bushes, shrubs, and ground cover in a manner acceptable to The Owner.
9. Observations of the work in progress and on–site visits are not to be construed as a guarantee or warranty by the Engineer of the Contractor's contractual responsibilities.
10. Contractor shall conform to all recommendations in the subsoil study prepared by HP–Kumar (Report # 18–7–201, May 21, 2018)
11. All drain pipes shall be installed with the required bedding.
12. Elevations shown are at pipe invert unless otherwise shown.
13. Where any part of the storm drain system is located in a fill section, provide fill material compacted to 95% AASHTO T99 density from the original undisturbed ground up to pipe bedding.
14. Direct downspout drainage beyond building backfill per Geotechnical Engineer.
15. Grading adjacent to buildings shall slope away from the building of 12" in 10' per the geotechnical report.
16. The Contractor shall maintain existing drainage channels, culverts, and appurtenances during construction as necessary to protect roads and property.
17. The Contractor shall remove all topsoil and man placed fill prior to commencement of construction.
18. The ground surface surrounding the exterior of buildings shall be graded to slope away from the foundations in all directions.
19. The contractor shall maintain existing drainage channels, culverts and appurtenances during construction as necessary to protect roads and property.
20. Contractor shall minimize construction disturbance to the satisfaction of the owner.
21. It is the contractors responsibility to take appropriate measures to insure that no sediment laden water is discharged from the site.
22. The driveway pavement design is by others. It is recommended the driveway subgrade be proofrolled prior to placement of road base and asphalt.

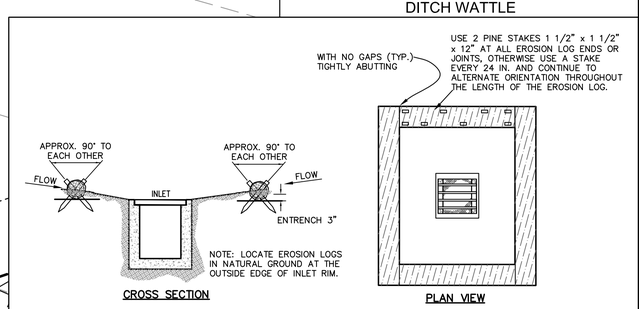

EROSION LOG INLET PROTECTION

ALPINE ENGINEERING INC.
34510 HWY 6 UNIT A9 / PO BOX 97
EDWARDS CO 81632 / 970.926.3373
WWW.ALPINECIVIL.COM

COLORADO LICENSED PROFESSIONAL ENGINEER MATTHEW C. KAK 39885 6-4-18

GREGG RESIDENCE
786 ASPEN BLUFF LANE, LOT 14
WOLCOTT, COLORAOD
GRADING & SEDIMENT CONTROL PLAN

NO.	DATE	REVISIONS	BY

DESIGNED	TSL
DRAWN	TSL
CHECKED	KAK
JOB NO.	XXX
DATE	06/06/2018

SHEET C1

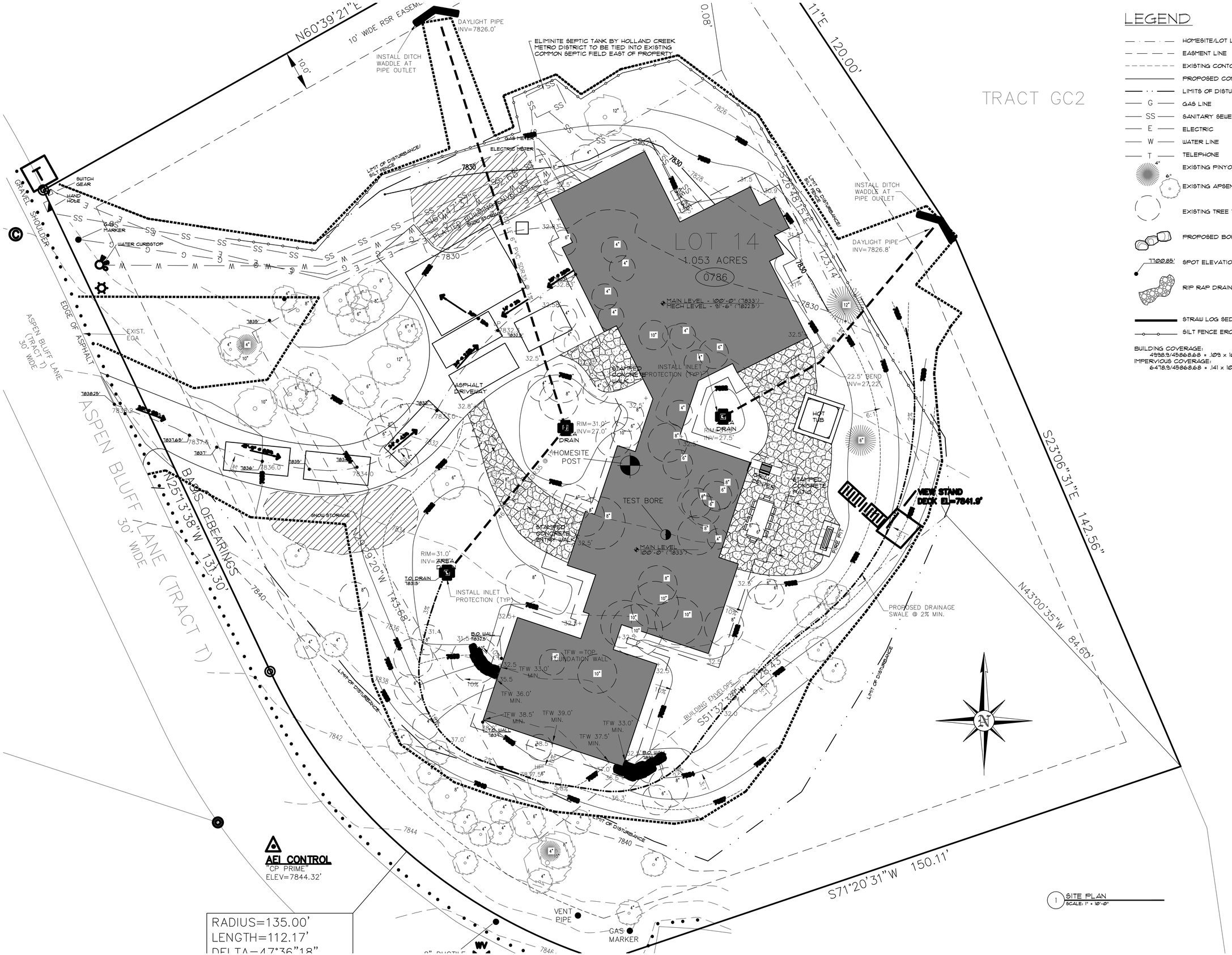

LEGEND

- HOMESITE/LOT LINE
- EASEMENT LINE
- EXISTING CONTOUR
- PROPOSED CONTOUR
- LIMITS OF DISTURBANCE
- G — GAS LINE
- SS — SANITARY SEWER
- E — ELECTRIC
- W — WATER LINE
- T — TELEPHONE
- EXISTING PINYON TO REMAIN
- EXISTING APSEN TO REMAIN
- EXISTING TREE TO BE REMOVED
- PROPOSED BOULDER WALL
- 7700.85' SPOT ELEVATION
- RIP RAP DRAINAGE SWALE
- STRAW LOG SEDIMENT CONTROL
- SILT FENCE EROSION CONTROL

BUILDING COVERAGE:
4998.9/45868.68 = .109 x 100 = 10.9%
IMPERVIOUS COVERAGE:
6478.9/45868.68 = .141 x 100 = 14.1%

NUTKINS DESIGN GROUP
P.O. BOX 3279 VAIL, CO 81658 (970) 471-1659

STATE OF COLORADO
WILLIAM E. NUTKINS JR.
403359
LICENSED ARCHITECT

Gregg Residence
786 Aspen Bluff Lane - Lot 14
Red Sky Ranch, Wolcott, Colorado

Job#:
2013-006

Issued:
DRB - 03/27/2018
Final DRB - 06/07/2018

Dwg. Name:
Site Grading Plan

Revision	No.	Date

Sheet
A101

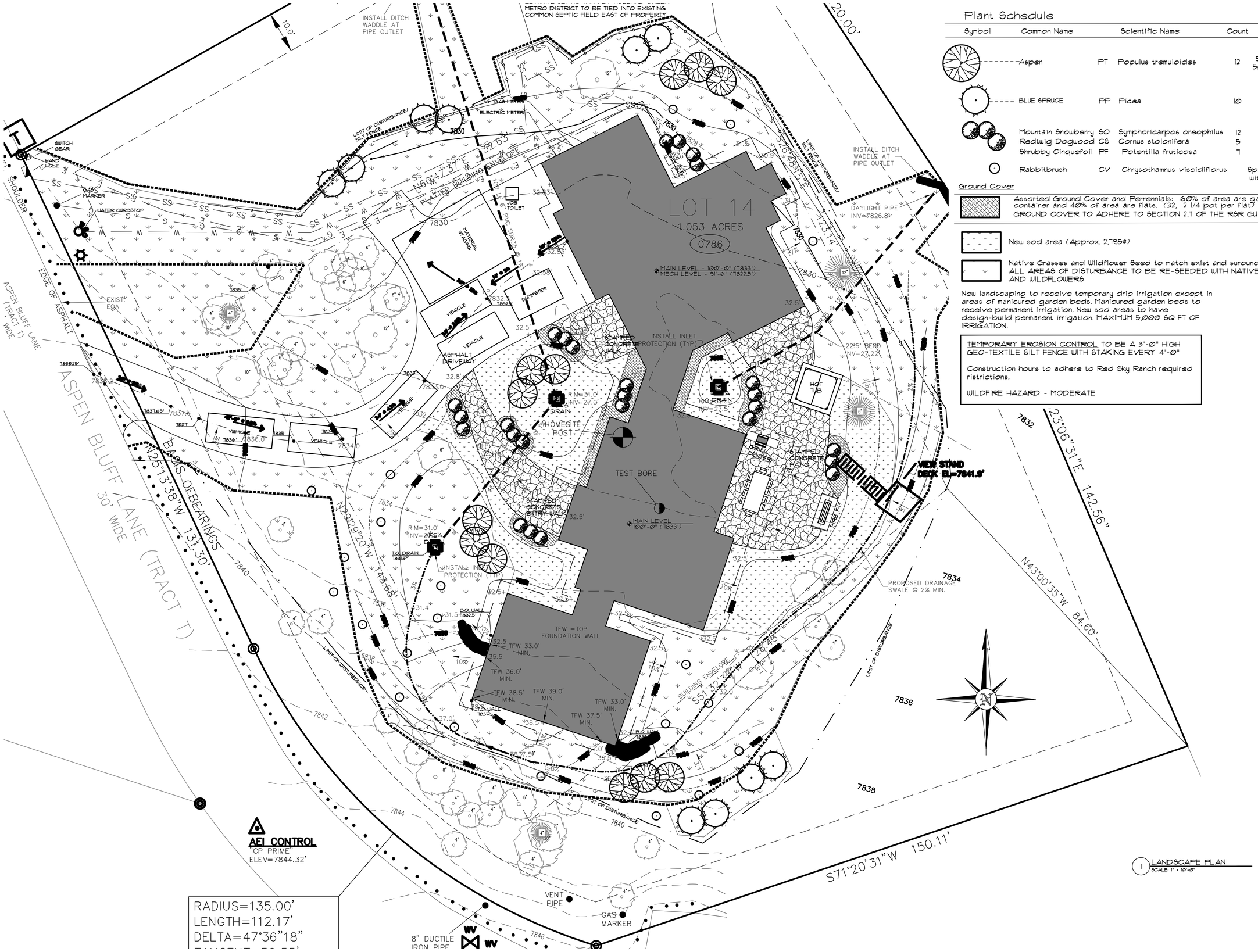

1 LANDSCAPE PLAN
SCALE: 1" = 10'-0"

Plant Schedule

Symbol	Common Name		Scientific Name	Count	Size
	Aspen	PT	Populus tremuloides	12	50% @ 2.5" Cal. 50% @ 3"-4" Cal.
	BLUE SPRUCE	PP	Picea	10	4 @ 8' 5 @ 10' 1 @12'
	Mountain Snowberry	SO	Symphoricarpos oreophilus	12	50% 5 gal
	Redtwig Dogwood	CS	Cornus stolonifera	5	40% 15 gal
	Shrubby Cinquefoil	PF	Potentilla fruticosa	7	10% B&B
	Rabbitbrush	CV	Chrysothamnus viscidiflorus		Sprinkled in with reveg

Ground Cover

Assorted Ground Cover and Perrennials: 60% of area are gallon container and 40% of area are flats. (32, 2 1/4 pot per flat) GROUND COVER TO ADHERE TO SECTION 2.7 OF THE RSR GUIDELINES

New sod area (Approx. 2,795#)

Native Grasses and Wildflower Seed to match exist and surounding area - ALL AREAS OF DISTURBANCE TO BE RE-SEEDED WITH NATIVE GRASSES AND WILDFLOWERS

New landscaping to receive temporary drip irrigation except in areas of manicured garden beds. Manicured garden beds to receive permanent irrigation. New sod areas to have design-build permanent irrigation. MAXIMUM 5,000 SQ FT OF IRRIGATION.

TEMPORARY EROSION CONTROL TO BE A 3'-0" HIGH GEO-TEXTILE SILT FENCE WITH STAKING EVERY 4'-0"

Construction hours to adhere to Red Sky Ranch required ristrictions.

WILDFIRE HAZARD - MODERATE

NUTKINS DESIGN GROUP
P.O. BOX 2279 EAGLE, CO 81631 (970) 471-0659

STATE OF COLORADO
Seal
WILLIAM E. NUTKINS JR.
403359
LICENSED ARCHITECT

Gregg Residence
786 Aspen Bluff Lane - Lot 14
Red Sky Ranch, Wolcott, Colorado

Job#:
2013-006

Issued:
DRB - 03/27/2018
Final DRB - 05/07/2018
Permit - 07/27/2018

Dwg. Name:
Landscape Plan

Revision	No.	Date

Sheet
A102

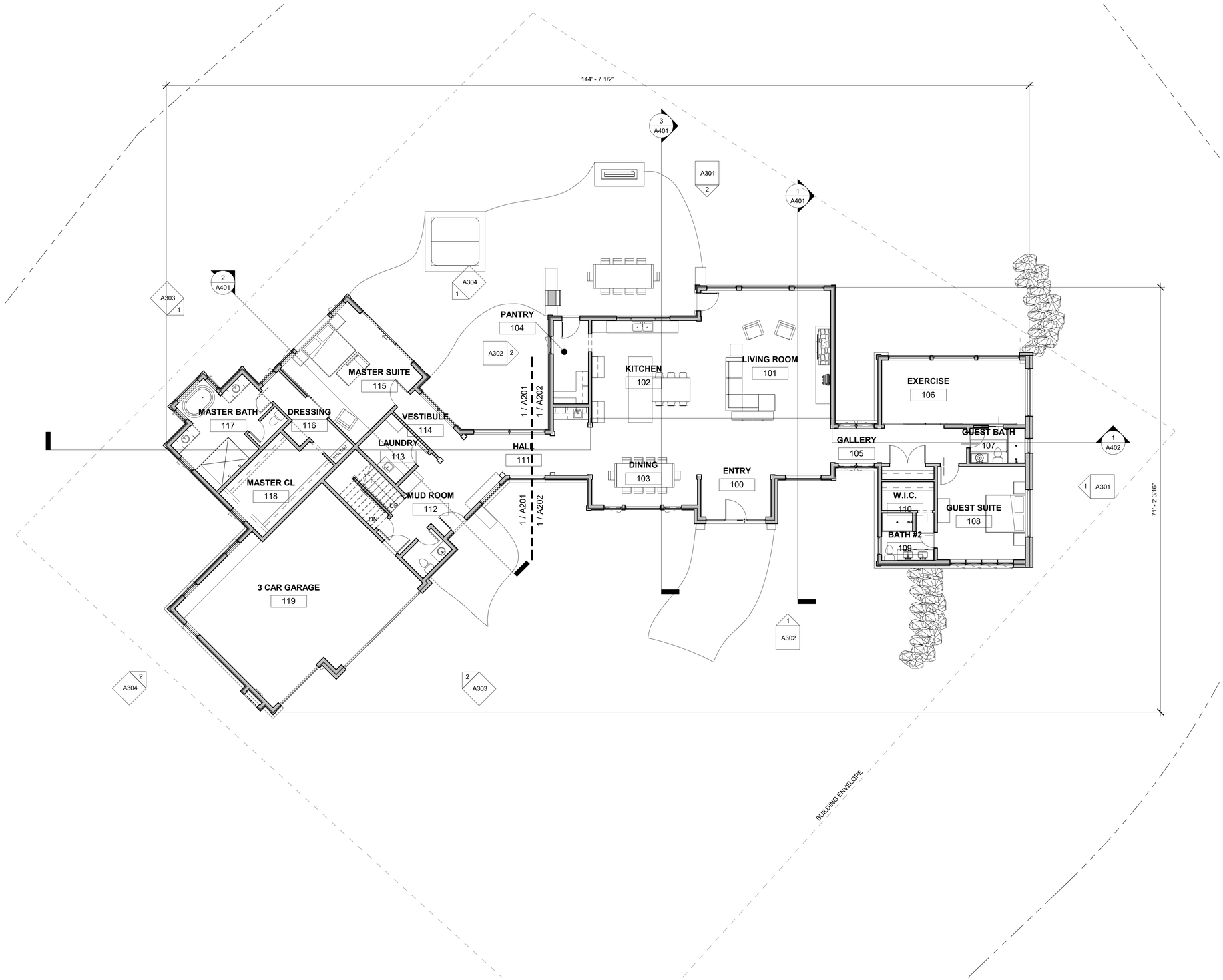

1 MAIN LEVEL - OVERALL
1/8" = 1'-0"

7/27/2018 1:48:26 PM D:\NDG\Gregg\Gregg - MainCurrent 7-27.rvt

NUTKINS DESIGN GROUP

STATE OF COLORADO
WILLIAM E. NUTKINS JR.
403359
SEAL
LICENSED ARCHITECT

Gregg Residence

786 Aspen Bluff Lane - Lot 14 Red Sky Ranch
Wolcott, Colorado

Job #
2013-006

Issue Date
Permit - 07/27/2018
DRB Final - 06/07/2018

MAIN LEVEL - OVERALL

Revision	No.	Date

A200

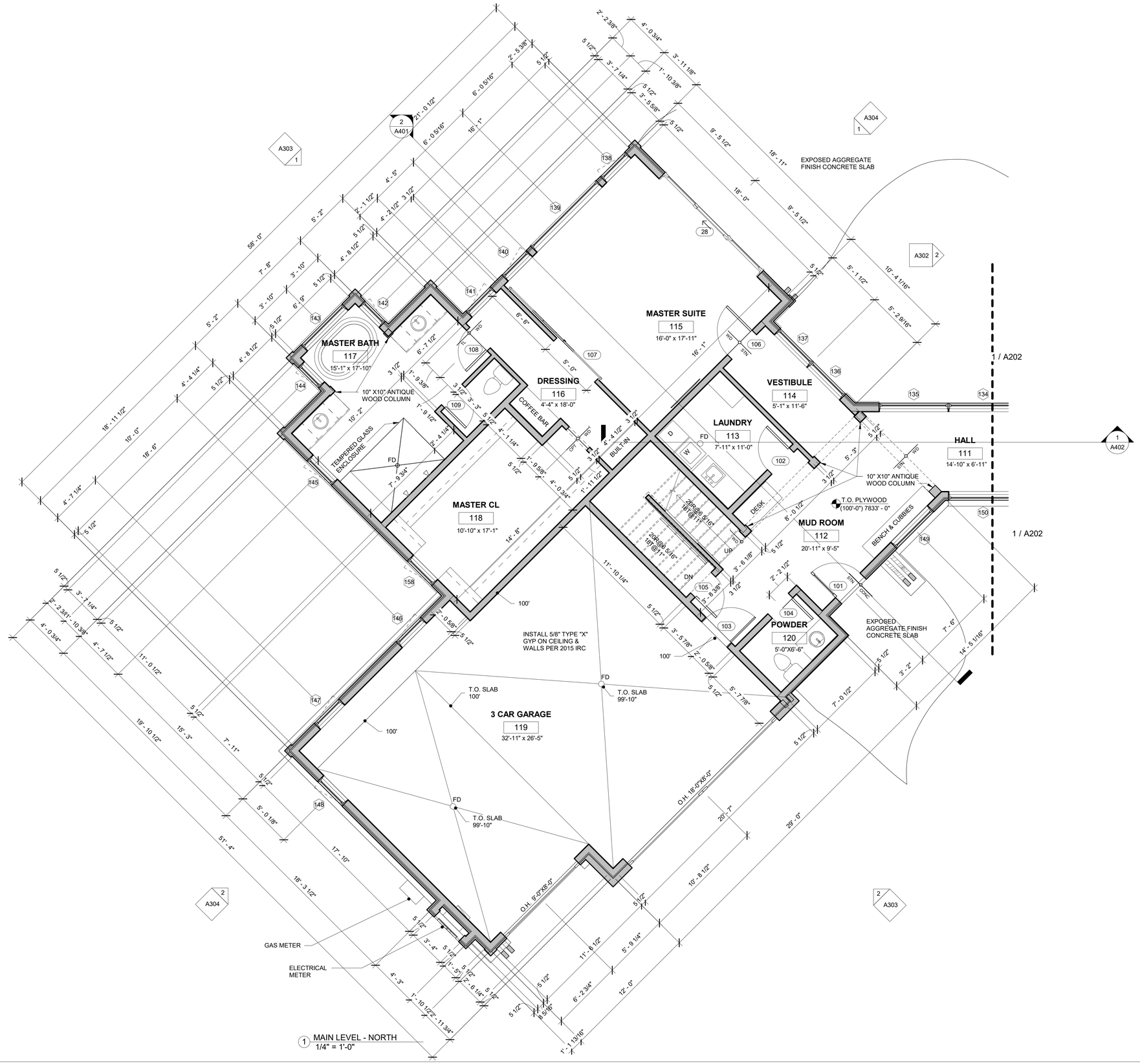

1 MAIN LEVEL - NORTH
1/4" = 1'-0"

7/27/2018 1:57:50 PM D:\NDG\Gregg\Gregg - MainCurrent 7-27.rvt

NUTKINS DESIGN GROUP

STATE OF COLORADO
WILLIAM E. NUTKINS JR.
403359
SEAL
LICENSED ARCHITECT

Gregg Residence
786 Aspen Bluff Lane - Lot 14 Red Sky Ranch
Wolcott, Colorado

Job #
2013-006

Issue Date
Permit - 07/27/2018
DRB Final - 06/07/2018

MAIN LEVEL - NORTH

Revision	No.	Date

A201

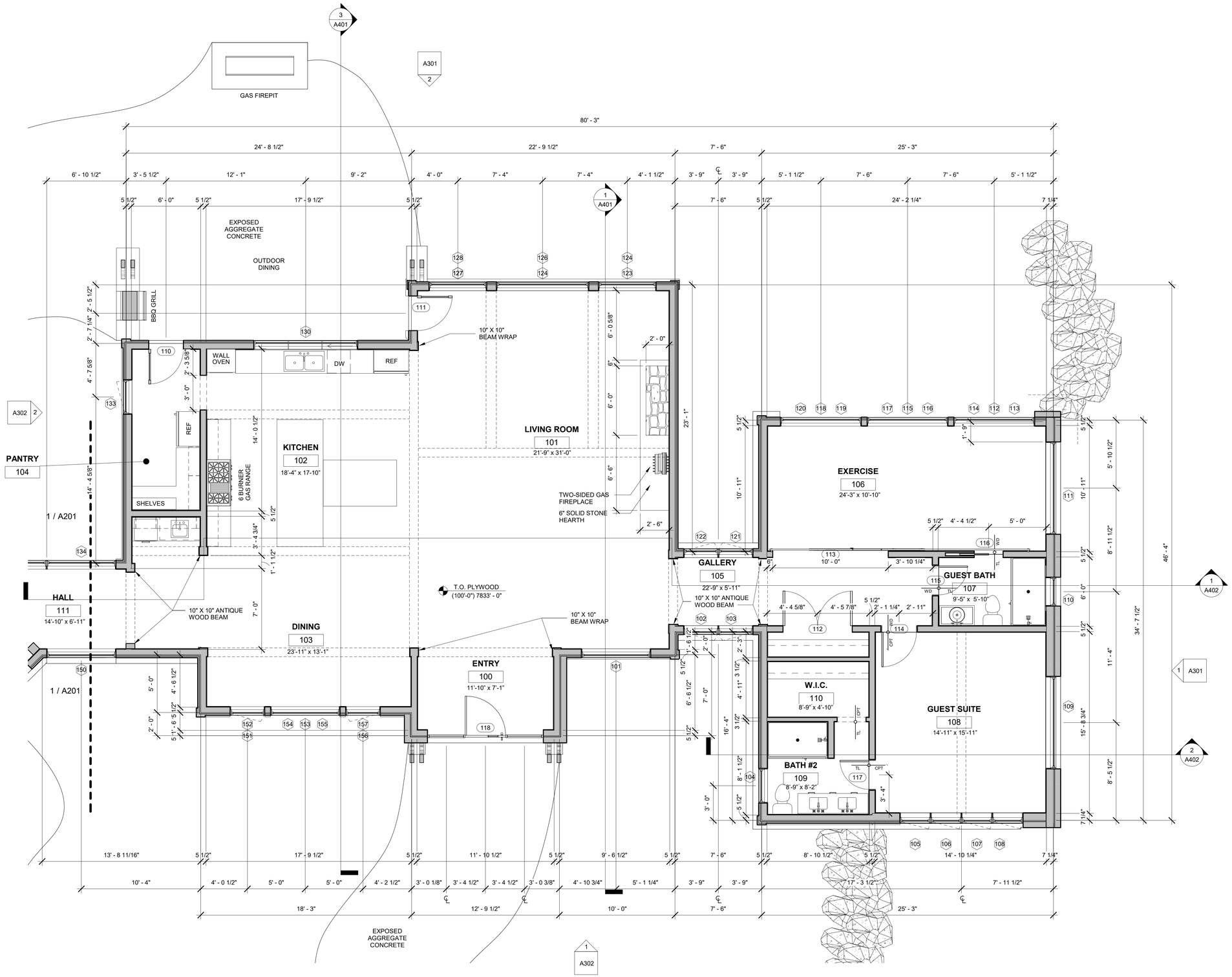

1 MAIN LEVEL - SOUTH
1/4" = 1'-0"

7/27/2018 1:48:37 PM D:\INDG\Gregg\Gregg - MainCurrent 7-27.rvt

NUTKINS DESIGN GROUP

STATE OF COLORADO
WILLIAM E. NUTKINS JR.
403359
SEAL
LICENSED ARCHITECT

Gregg Residence
786 Aspen Bluff Lane - Lot 14 Red Sky Ranch
Wolcott, Colorado

Job #
2013-006

Issue Date
Permit - 07/27/2018
DRB Final - 06/07/2018

MAIN LEVEL - SOUTH

Revision	No.	Date

A202

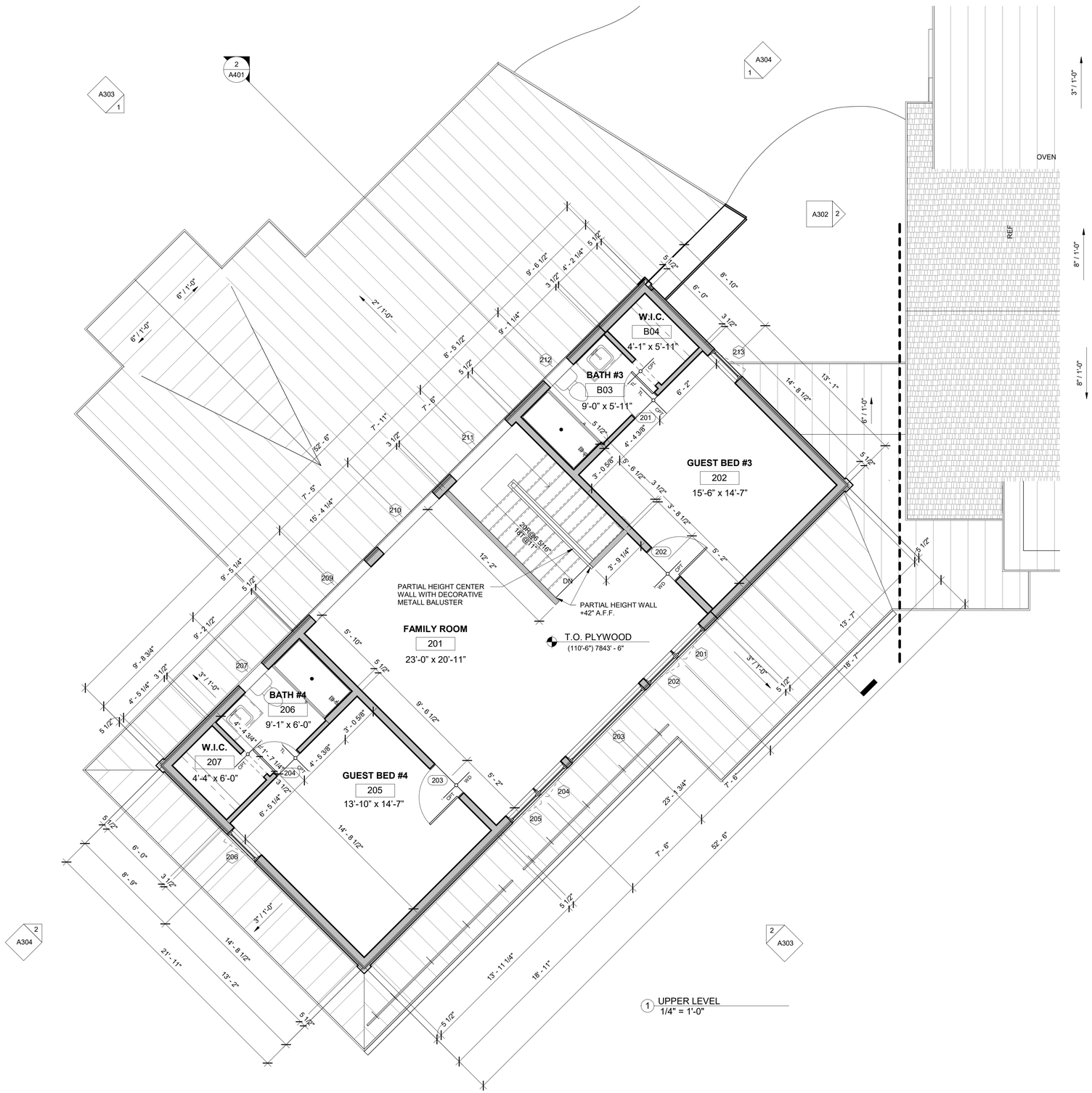

1 UPPER LEVEL
1/4" = 1'-0"

7/27/2018 1:48:46 PM D:\INDG\Gregg\Gregg - MainCurrent 7-27.rvt

NUTKINS DESIGN GROUP

STATE OF COLORADO
WILLIAM E. NUTKINS JR.
403359
SEAL
LICENSED ARCHITECT

Gregg Residence
786 Aspen Bluff Lane - Lot 14 Red Sky Ranch
Wolcott, Colorado

Job #
2013-006

Issue Date
Permit - 07/27/2018
DRB Final - 06/07/2018

UPPER LEVEL

Revision	No.	Date

A203

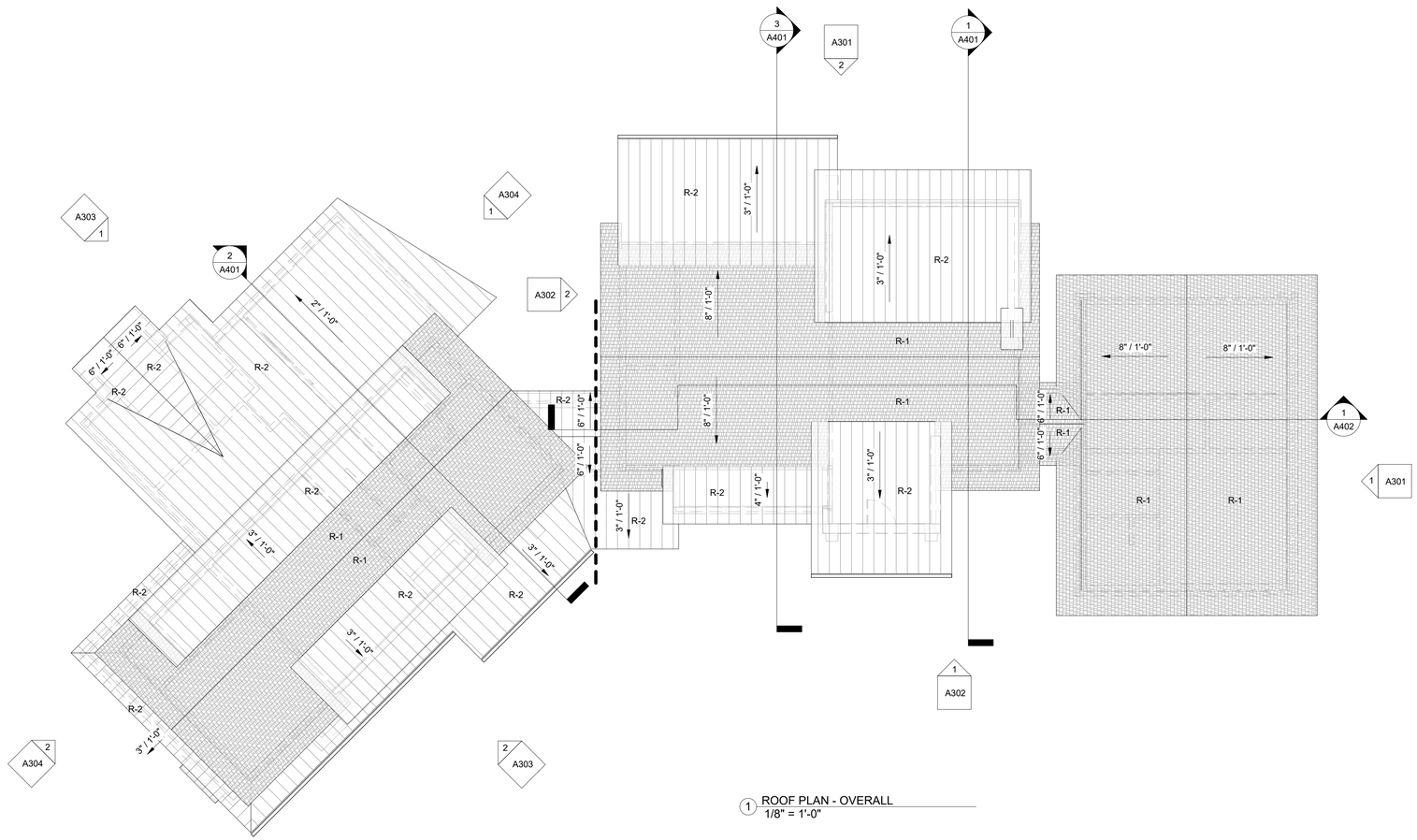

1 ROOF PLAN - OVERALL
1/8" = 1'-0"

ROOF MATERIALS
R-1 SYNTHETIC SHAKE (CeDUR OR DaVinci)

R-2 METAL STANDING SEAM ROOF - NATURALLY RUSTED

SNOW FENCES -
R-2 - 2 BAR CLAMP TO SEAM SNOWFENCE

FLASHING, GUTTERS & DOWNSPOUTS: STEEL TO MATCH ROOF (ALL DOWNSPOUT TO TERMINATE INTO PVC LEADER AND DRAIN TO DAYLIGHT)

GENERAL NOTES:
1. HATCHED AREAS INDICATE OVER-BUILD
2. ALL GUTTERS & DOWNSPOUTS TO RECEIVE HEAT TAPE FULL LENGTH
3. OVERHANG DIMENSIONS TAKEN FROM F.O. FRAMING U.N.O.
4. CONTRACTOR TO VERIFY CHIMNEY DIMENSIONS WITH FIREPLACE MANUFACTURER.
5. SOFFITED OVERHANGS OVER 4'-0" TO RECIEVE 5/8" TYPE X GYP BELOW 1X6 SOFFIT MATERIAL.
6. TYPICAL ROOF DETAILS:
   A. SOFFITED ROOF EAVE - 5 / A502
   B. EXPOSED JOIST ROOF EAVE - 8 / A502
   C. ROOF PITCH TRANSITION DETAIL - 3 / A502
   D. ROOF AT WALL DETAIL - 4 / A502

ROOF NOTES
1/4" = 1'-0"

NUTKINS DESIGN GROUP

STATE OF COLORADO
WILLIAM E. NUTKINS JR.
403359
SEAL
LICENSED ARCHITECT

Gregg Residence
786 Aspen Bluff Lane - Lot 14 Red Sky Ranch
Wolcott, Colorado

Job #
2013-006

Issue Date
Permit - 07/27/2018

DRB Final - 06/07/2018

ROOF PLAN - OVERALL

Revision	No.	Date

A204

7/27/2018 1:49:09 PM D:\NDG\Gregg\Gregg - MainCurrent 7-27.rvt

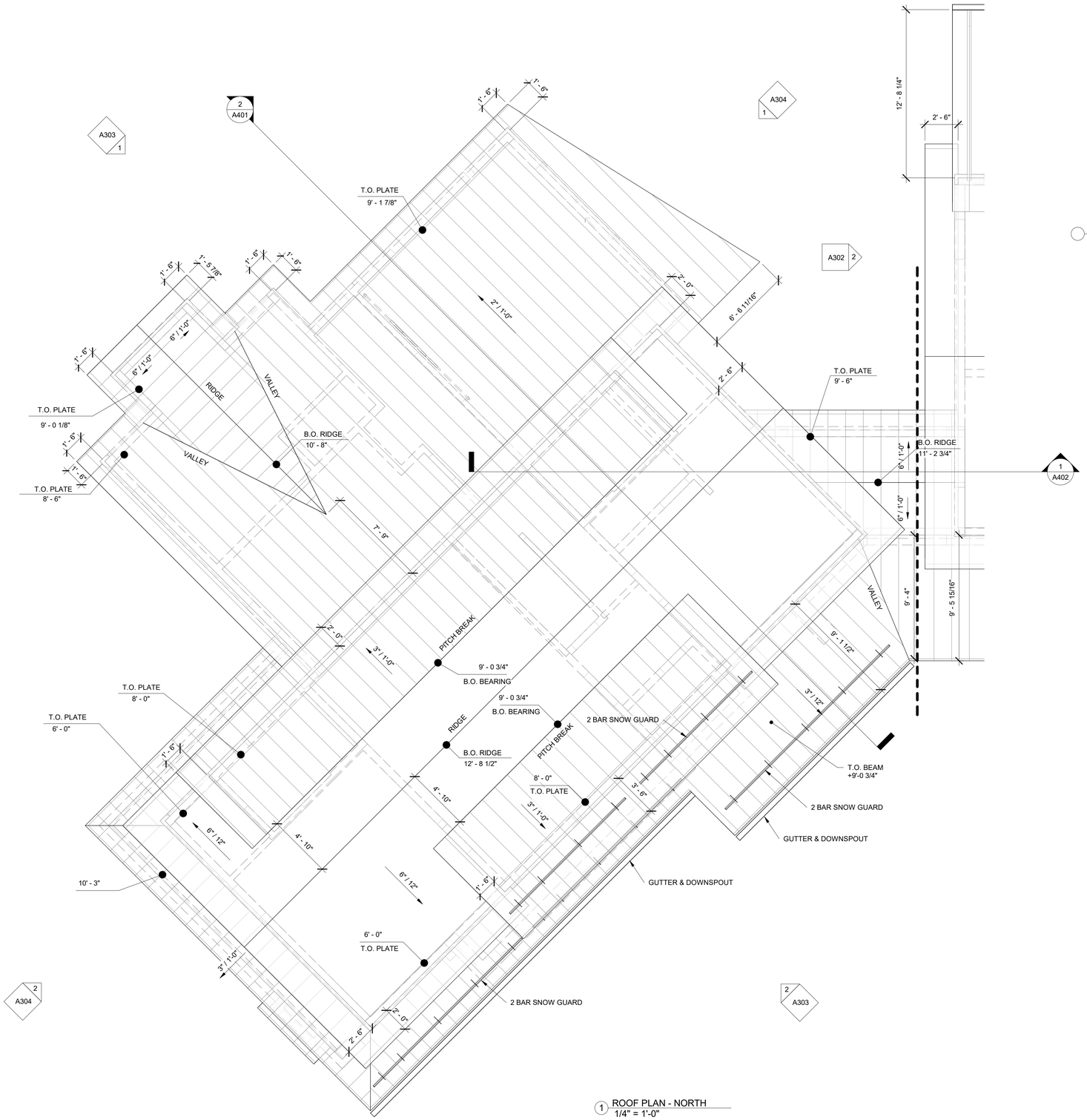

1 ROOF PLAN - NORTH
1/4" = 1'-0"

ROOF MATERIALS
R-1 SYNTHETIC SHAKE (CeDUR OR DaVinci)

R-2 METAL STANDING SEAM ROOF - NATURALLY RUSTED

SNOW FENCES -
R-2 - 2 BAR CLAMP TO SEAM SNOWFENCE

FLASHING, GUTTERS & DOWNSPOUTS: STEEL TO MATCH ROOF (ALL DOWNSPOUT TO TERMINATE INTO PVC LEADER AND DRAIN TO DAYLIGHT)

GENERAL NOTES:
1. HATCHED AREAS INDICATE OVER-BUILD
2. ALL GUTTERS & DOWNSPOUTS TO RECEIVE HEAT TAPE FULL LENGTH
3. OVERHANG DIMENSIONS TAKEN FROM F.O. FRAMING U.N.O.
4. CONTRACTOR TO VERIFY CHIMNEY DIMENSIONS WITH FIREPLACE MANUFACTURER.
5. SOFFITED OVERHANGS OVER 4'-0" TO RECIEVE 5/8" TYPE X GYP BELOW 1X6 SOFFIT MATERIAL.
6. TYPICAL ROOF DETAILS:
   A. SOFFITED ROOF EAVE - 5 / A502
   B. EXPOSED JOIST ROOF EAVE - 8 / A502
   C. ROOF PITCH TRANSITION DETAIL - 3 / A502
   D. ROOF AT WALL DETAIL - 4 / A502

ROOF NOTES
1/4" = 1'-0"

NUTKINS DESIGN GROUP

STATE OF COLORADO
WILLIAM E. NUTKINS JR.
403359
SEAL
LICENSED ARCHITECT

Gregg Residence
786 Aspen Bluff Lane - Lot 14 Red Sky Ranch
Wolcott, Colorado

Job #
2013-006

Issue Date
Permit - 07/27/2018
DRB Final - 06/07/2018

ROOF PLAN - NORTH

Revision	No.	Date

A205

7/27/2018 1:49:33 PM D:\NDG\Gregg\Gregg - MainCurrent 7-27.rvt

ROOF MATERIALS
R-1 SYNTHETIC SHAKE (CeDUR OR DaVinci)

R-2 METAL STANDING SEAM ROOF - NATURALLY RUSTED

SNOW FENCES -
R-2 - 2 BAR CLAMP TO SEAM SNOWFENCE

FLASHING, GUTTERS & DOWNSPOUTS: STEEL TO MATCH ROOF (ALL DOWNSPOUT TO TERMINATE INTO PVC LEADER AND DRAIN TO DAYLIGHT)

GENERAL NOTES:
1. HATCHED AREAS INDICATE OVER-BUILD
2. ALL GUTTERS & DOWNSPOUTS TO RECEIVE HEAT TAPE FULL LENGTH
3. OVERHANG DIMENSIONS TAKEN FROM F.O. FRAMING U.N.O.
4. CONTRACTOR TO VERIFY CHIMNEY DIMENSIONS WITH FIREPLACE MANUFACTURER.
5. SOFFITED OVERHANGS OVER 4'-0" TO RECIEVE 5/8" TYPE X GYP BELOW 1X6 SOFFIT MATERIAL.
6. TYPICAL ROOF DETAILS:
   A. SOFFITED ROOF EAVE - 5 / A502
   B. EXPOSED JOIST ROOF EAVE - 8 / A502
   C. ROOF PITCH TRANSITION DETAIL - 3 / A502
   D. ROOF AT WALL DETAIL - 4 / A502

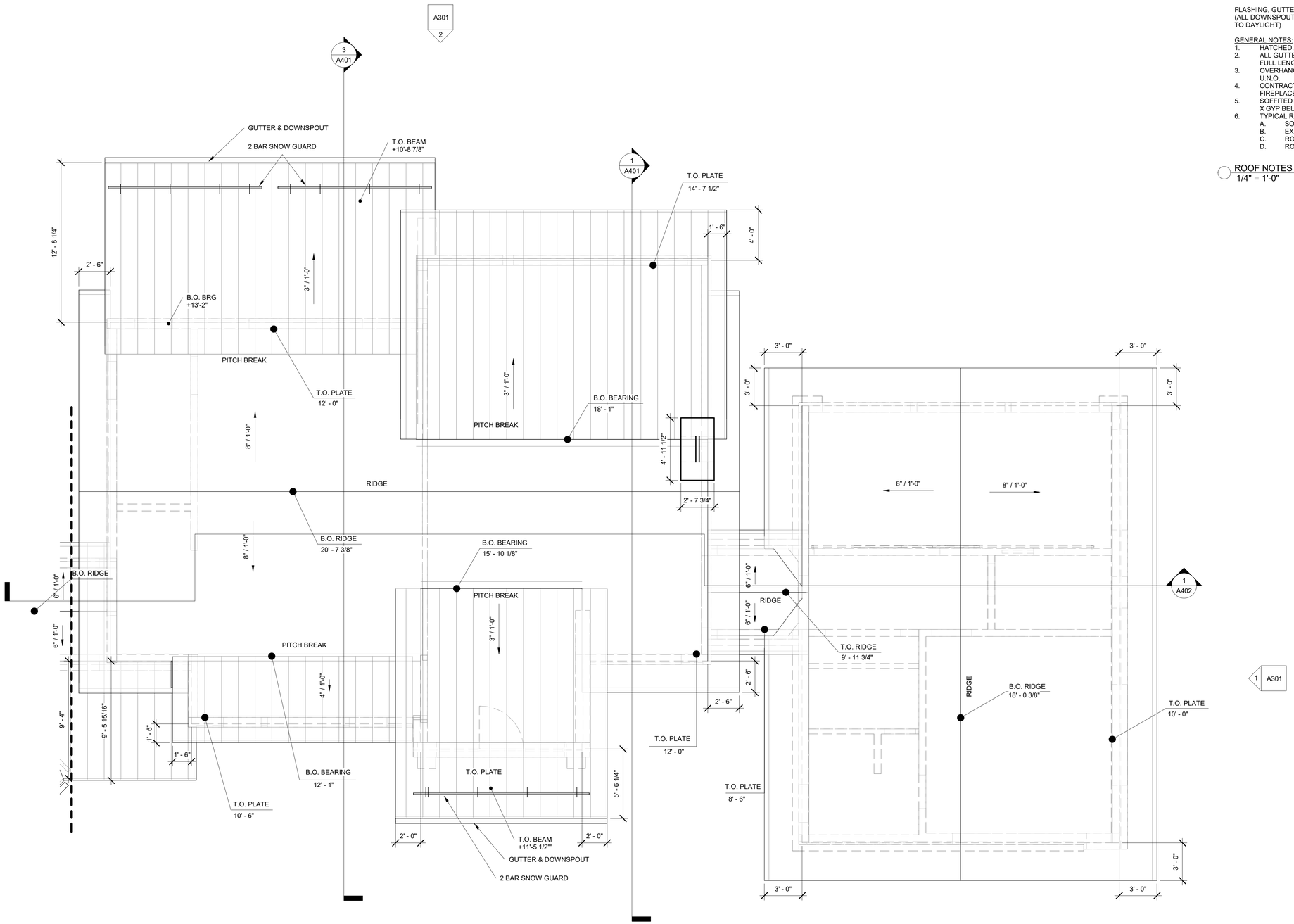

1 ROOF PLAN - SOUTH
1/4" = 1'-0"

1
A302

7/27/2018 1:49:39 PM D:\INDG\Gregg\Gregg - MainCurrent 7-27.rvt

NUTKINS DESIGN GROUP

STATE OF COLORADO
WILLIAM E. NUTKINS JR.
403359
SEAL
LICENSED ARCHITECT

Gregg Residence
786 Aspen Bluff Lane - Lot 14 Red Sky Ranch
Wolcott, Colorado

Job #
2013-006

Issue Date
Permit - 07/27/2018
DRB Final - 06/07/2018

ROOF PLAN - SOUTH

No.	Date	Revision

A206

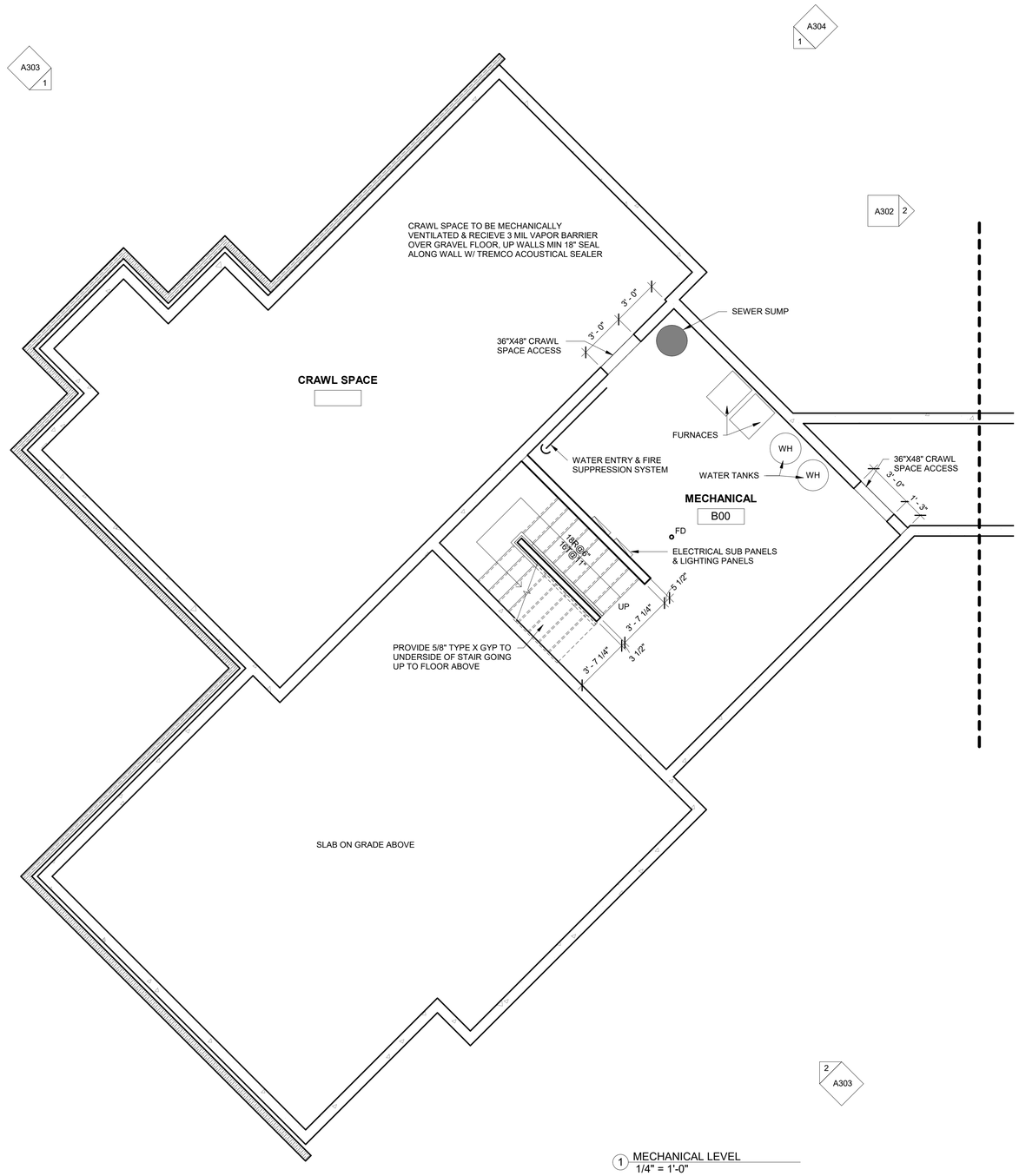

1 MECHANICAL LEVEL
1/4" = 1'-0"

7/27/2018 1:49:43 PM D:\NDG\Gregg\Gregg - MainCurrent 7-27.rvt

NUTKINS DESIGN GROUP

STATE OF COLORADO
WILLIAM E. NUTKINS JR.
403359
SEAL
LICENSED ARCHITECT

Gregg Residence

786 Aspen Bluff Lane - Lot 14 Red Sky Ranch
Wolcott, Colorado

Job #
2013-006

Issue Date
Permit - 07/27/2018
DRB Final - 06/07/2018

MECHANICAL LEVEL PLAN

Revision	No.	Date

A207

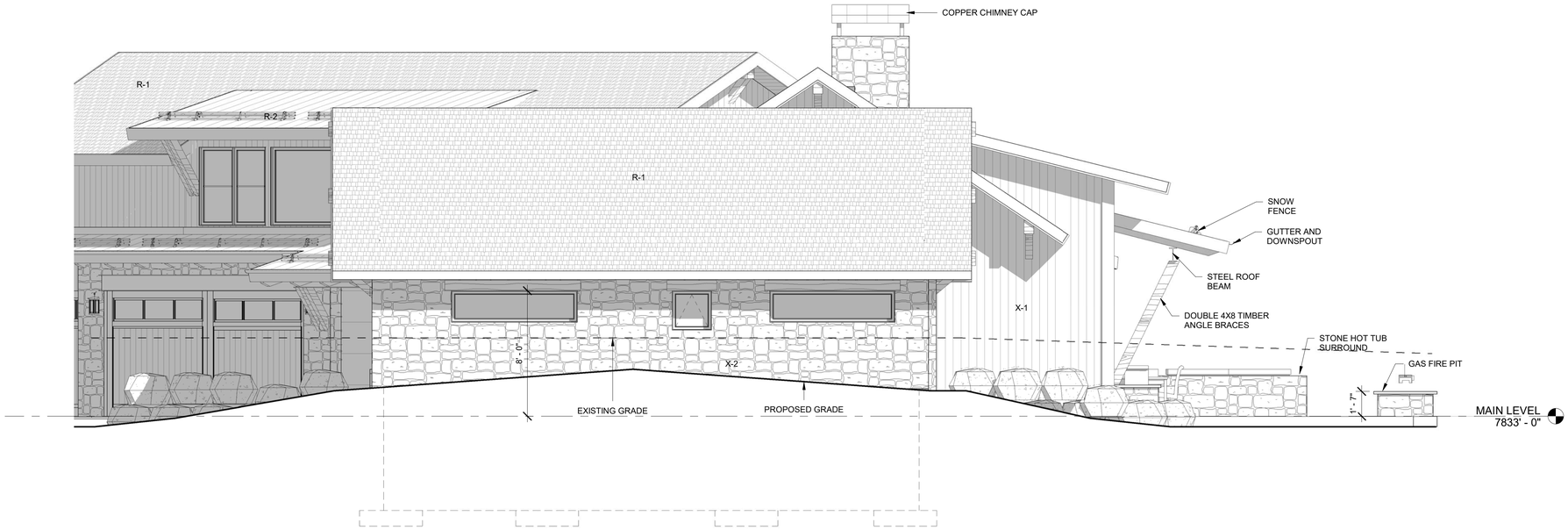

1 GUEST SUITE - SOUTH ELEVATION
1/4" = 1'-0"

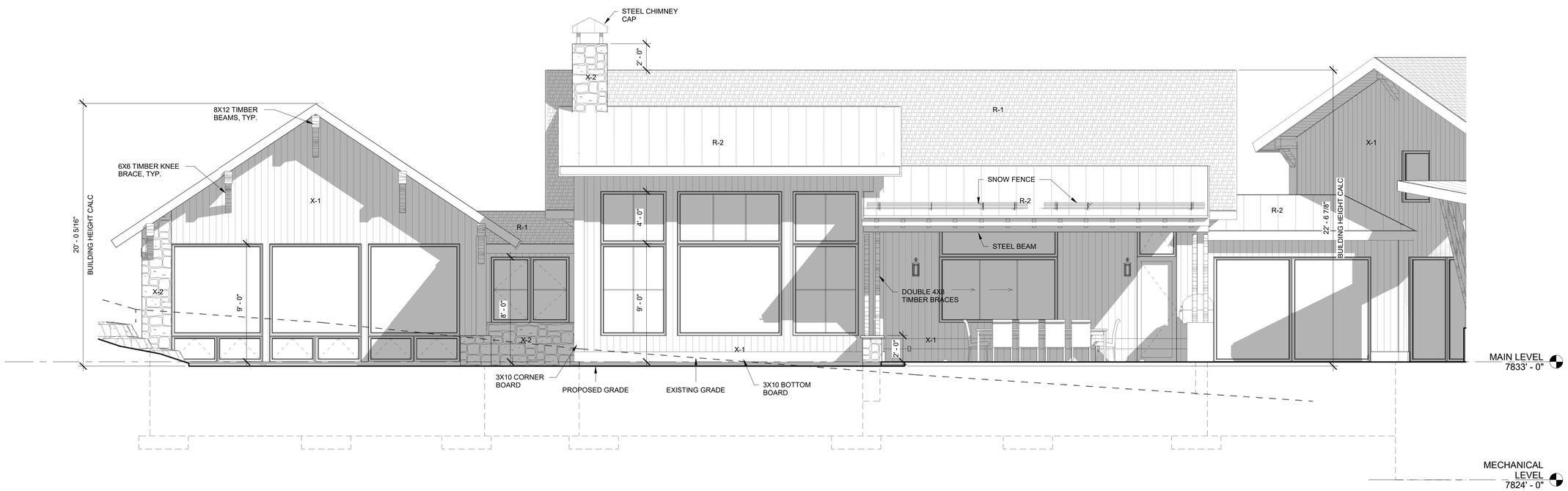

2 EAST ELEVATION
1/4" = 1'-0"

EXTERIOR FINISH

X-1 STONE VENEER - DRYSTACK MOSS ROCK W/ RUBBLE CAP

X-2 VERTICAL RUSTIC ANTIQUE WOOD

X-3 STEEL PANELS - NATURALLY WEATHERED

R-1 SYNTHETIC SHAKES - CeDUR, COLOR - SHILO

R-2 STANDING SEAM STEEL ROOF - NATURALLY WEATHERED

METAL ROOF SNOW FENCES: SNOW FENCES BY TRA SNOW GUARDS - 2 BAR CLAMP DOWN SNOW FENCE
SHAKE ROOF SNOW FENCES: TRA SNOW GUARDS - 2 BAR DECK MOUNTED

FLASHING, GUTTERS & DOWNSPOUTS: STEEL - NATURALLY WEATHERED

DOORS & WINDOWS: METAL CLAD WINDOWS, COLOR - BLACK

HEAD TRIM	- 6X10 WD IN X-1 - 2X4 WD FLAT IN X-2 - 2X4 WD FLAT IN X-3
JAMB/SILL TRIM	- 2X4 WD FLAT IN X-3
FASCIA	- 2x8 RS CEDAR
RAFTER TAILS	- 4X8 RS CEDAR

EXTERIOR LIGHT FIXTURE LOCATION - SEE ELEVATIONS

EXTERIOR MATERIALS
1/4" = 1'-0"

NDG NUTKINS DESIGN GROUP

STATE OF COLORADO
WILLIAM E. NUTKINS JR.
403359
SEAL
LICENSED ARCHITECT

Gregg Residence
786 Aspen Bluff Lane - Lot 14 Red Sky Ranch
Wolcott, Colorado

Job #
2013-006

Issue Date
Permit - 07/27/2018
DRB Final - 06/07/2018

EXTERIOR ELEVATIONS

Revision	No.	Date

A301

7/27/2018 1:49:50 PM D:\NDG\Gregg\Gregg - MainCurrent 7-27.rvt

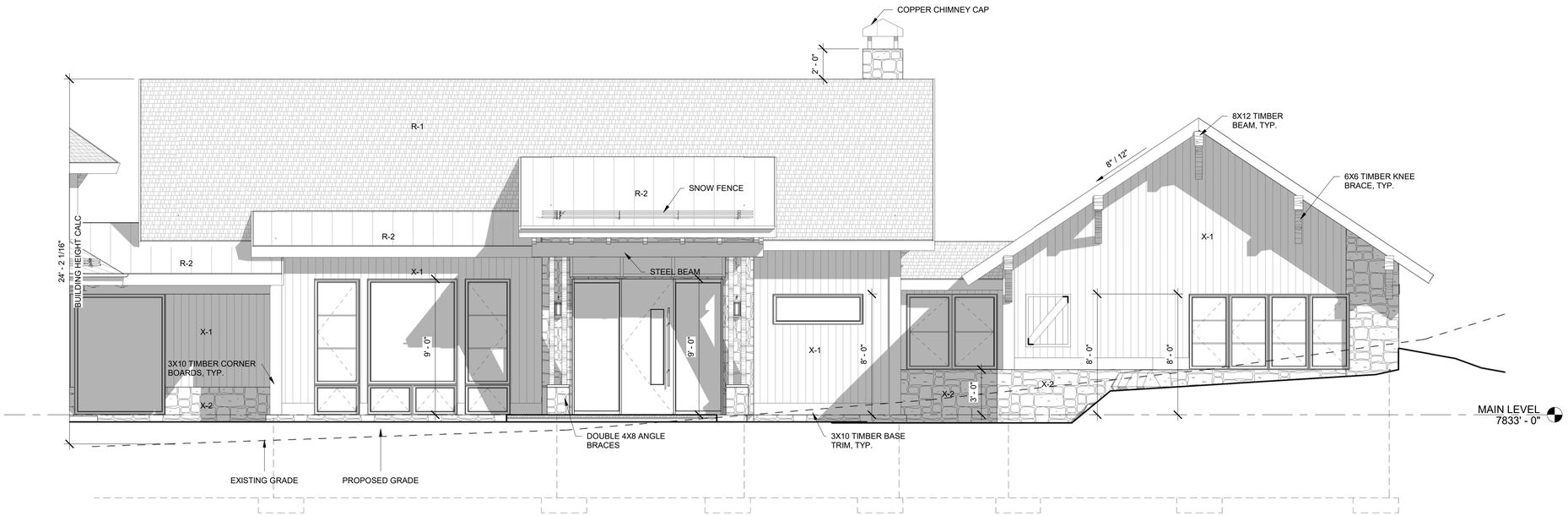

1 WEST ELEVATION
1/4" = 1'-0"

EXTERIOR FINISH

X-1 STONE VENEER - DRYSTACK MOSS ROCK W/ RUBBLE CAP

X-2 VERTICAL RUSTIC ANTIQUE WOOD

X-3 STEEL PANELS - NATURALLY WEATHERED

R-1 SYNTHETIC SHAKES - CeDUR, COLOR - SHILO

R-2 STANDING SEAM STEEL ROOF - NATURALLY WEATHERED

METAL ROOF SNOW FENCES: SNOW FENCES BY TRA SNOW GUARDS - 2 BAR CLAMP DOWN SNOW FENCE
SHAKE ROOF SNOW FENCES: TRA SNOW GUARDS - 2 BAR DECK MOUNTED

FLASHING, GUTTERS & DOWNSPOUTS: STEEL - NATURALLY WEATHERED

DOORS & WINDOWS: METAL CLAD WINDOWS, COLOR - BLACK

HEAD TRIM	- 6X10 WD IN X-1
	- 2X4 WD FLAT IN X-2
	- 2X4 WD FLAT IN X-3
JAMB/SILL TRIM	- 2X4 WD FLAT IN X-3
FASCIA	- 2x8 RS CEDAR
RAFTER TAILS	- 4X8 RS CEDAR

EXTERIOR LIGHT FIXTURE LOCATION - SEE ELEVATIONS

EXTERIOR MATERIALS
1/4" = 1'-0"

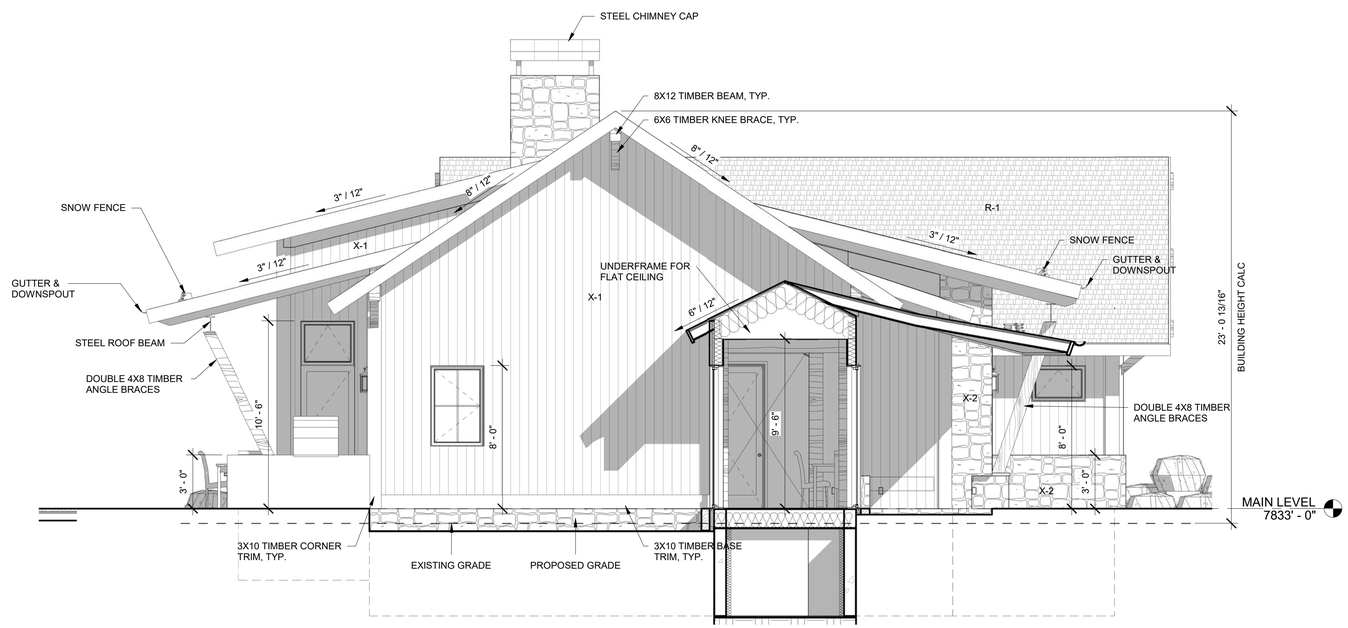

2 LIVING NORTH
1/4" = 1'-0"

7/27/2018 1:49:57 PM D:\NDG\Gregg\Gregg - MainCurrent 7-27.rvt

NUTKINS DESIGN GROUP

STATE OF COLORADO
WILLIAM E. NUTKINS JR.
403359
SEAL
LICENSED ARCHITECT

Gregg Residence

786 Aspen Bluff Lane - Lot 14 Red Sky Ranch
Wolcott, Colorado

Job #
2013-006

Issue Date
Permit - 07/27/2018
DRB Final - 06/07/2018

EXTERIOR ELEVATIONS

Revision	No.	Date

A302

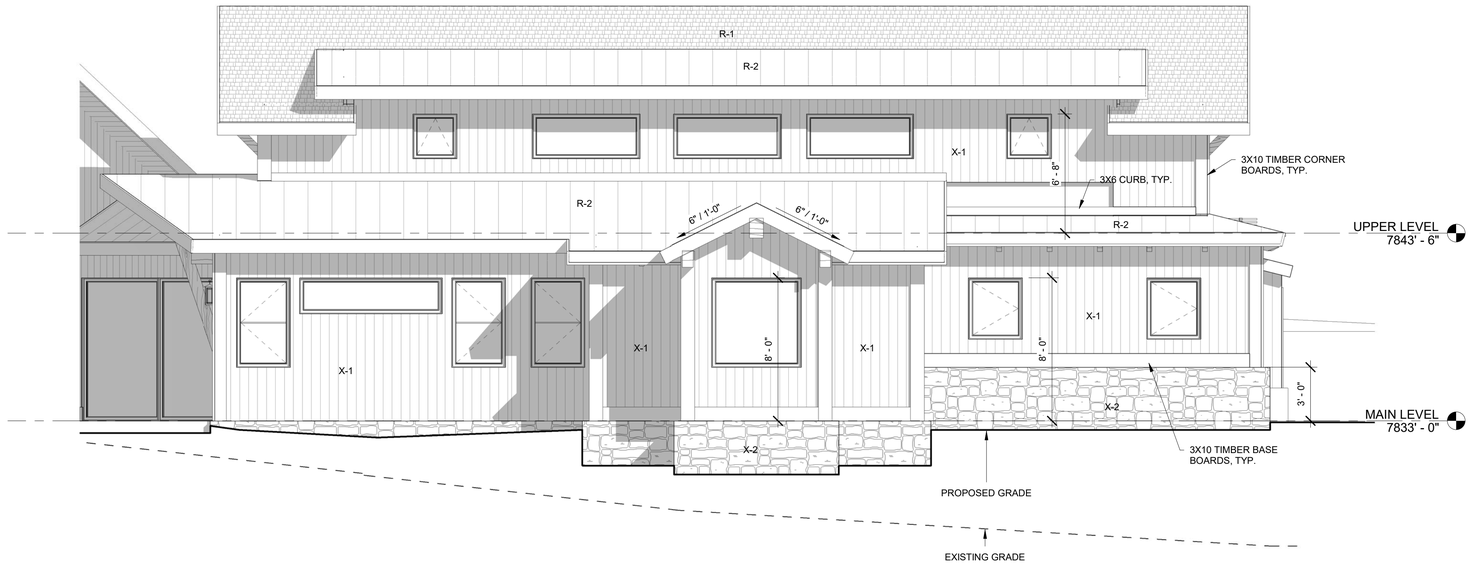

1 MASTER - NORTHWEST ELEVATION
1/4" = 1'-0"

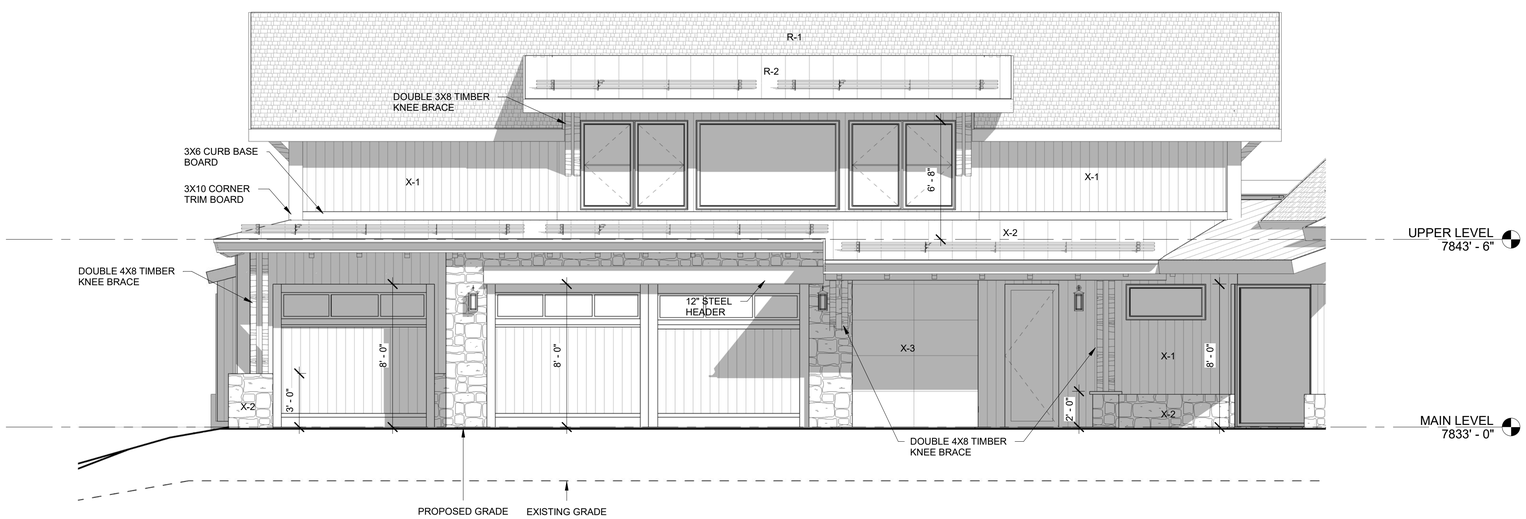

2 GARAGE - SOUTHEAST ELEVATION
1/4" = 1'-0"

EXTERIOR FINISH

X-1 STONE VENEER - DRYSTACK MOSS ROCK W/ RUBBLE CAP

X-2 VERTICAL RUSTIC ANTIQUE WOOD

X-3 STEEL PANELS - NATURALLY WEATHERED

R-1 SYNTHETIC SHAKES - CeDUR, COLOR - SHILO

R-2 STANDING SEAM STEEL ROOF - NATURALLY WEATHERED

METAL ROOF SNOW FENCES: SNOW FENCES BY TRA SNOW GUARDS - 2 BAR CLAMP DOWN SNOW FENCE
SHAKE ROOF SNOW FENCES: TRA SNOW GUARDS - 2 BAR DECK MOUNTED

FLASHING, GUTTERS & DOWNSPOUTS: STEEL - NATURALLY WEATHERED

DOORS & WINDOWS: METAL CLAD WINDOWS, COLOR - BLACK

HEAD TRIM	- 6X10 WD IN X-1 - 2X4 WD FLAT IN X-2 - 2X4 WD FLAT IN X-3
JAMB/SILL TRIM	- 2X4 WD FLAT IN X-3
FASCIA	- 2x8 RS CEDAR
RAFTER TAILS	- 4X8 RS CEDAR

EXTERIOR LIGHT FIXTURE LOCATION - SEE ELEVATIONS

EXTERIOR MATERIALS
1/4" = 1'-0"

NUTKINS DESIGN GROUP

STATE OF COLORADO
WILLIAM E. NUTKINS JR.
403359
SEAL
LICENSED ARCHITECT

Gregg Residence
786 Aspen Bluff Lane - Lot 14 Red Sky Ranch
Wolcott, Colorado

Job #
2013-006

Issue Date
Permit - 07/27/2018
DRB Final - 06/07/2018

EXTERIOR ELEVATIONS

Revision	No.	Date

A303

7/27/2018 1:50:02 PM D:\NDG\Gregg\Gregg - MainCurrent 7-27.rvt

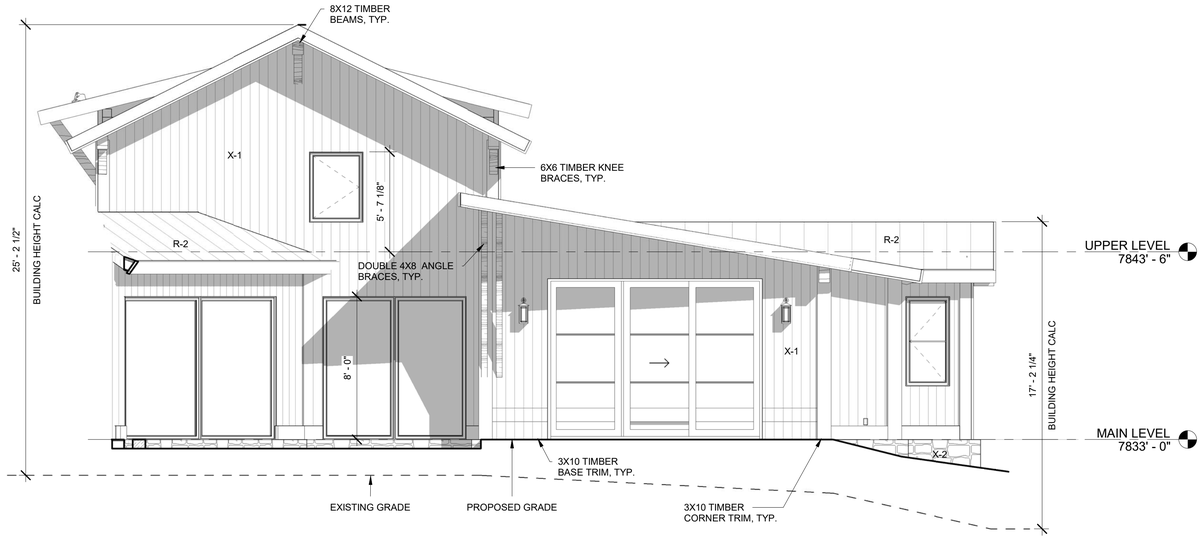

1 MASTER - NORTHEAST ELEVATION
1/4" = 1'-0"

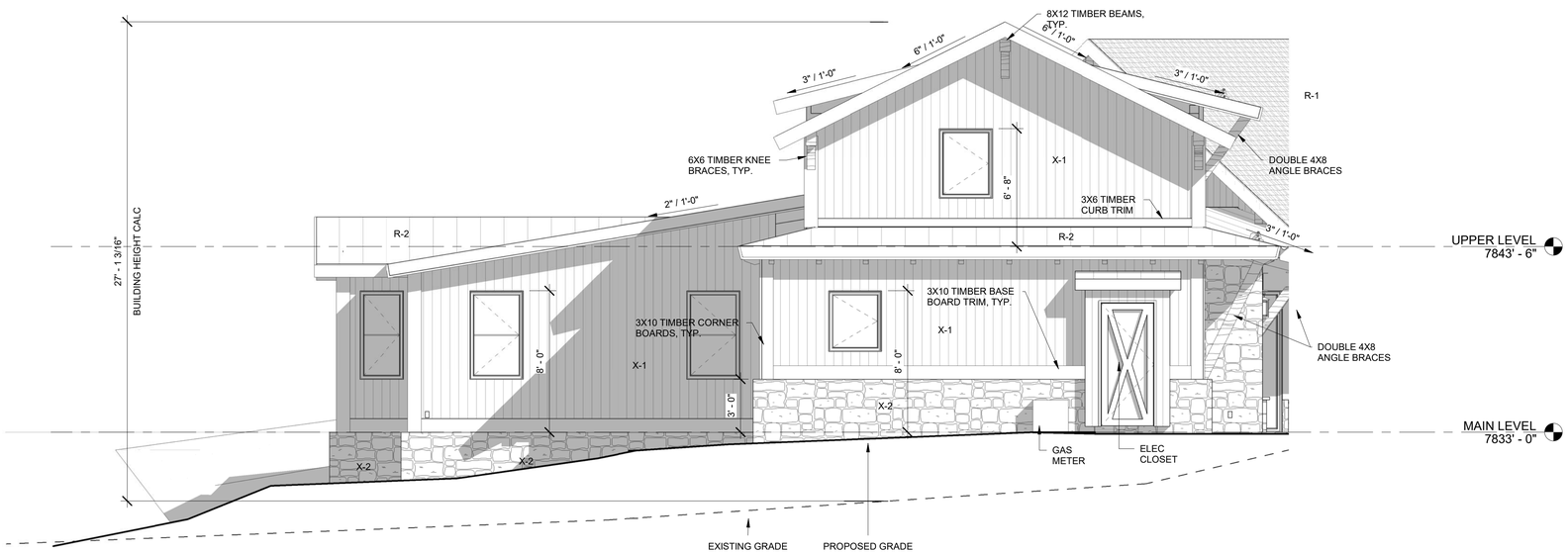

2 GARAGE - SOUTHWEST ELEVATION
1/4" = 1'-0"

EXTERIOR FINISH

X-1 STONE VENEER - DRYSTACK MOSS ROCK W/ RUBBLE CAP

X-2 VERTICAL RUSTIC ANTIQUE WOOD

X-3 STEEL PANELS - NATURALLY WEATHERED

R-1 SYNTHETIC SHAKES - CeDUR, COLOR - SHILO

R-2 STANDING SEAM STEEL ROOF - NATURALLY WEATHERED

METAL ROOF SNOW FENCES: SNOW FENCES BY TRA SNOW GUARDS - 2 BAR CLAMP DOWN SNOW FENCE
SHAKE ROOF SNOW FENCES: TRA SNOW GUARDS - 2 BAR DECK MOUNTED

FLASHING, GUTTERS & DOWNSPOUTS: STEEL - NATURALLY WEATHERED

DOORS & WINDOWS: METAL CLAD WINDOWS, COLOR - BLACK

HEAD TRIM	- 6X10 WD IN X-1 - 2X4 WD FLAT IN X-2 - 2X4 WD FLAT IN X-3
JAMB/SILL TRIM	- 2X4 WD FLAT IN X-3
FASCIA	- 2x8 RS CEDAR
RAFTER TAILS	- 4X8 RS CEDAR

EXTERIOR LIGHT FIXTURE LOCATION - SEE ELEVATIONS

EXTERIOR MATERIALS
1/4" = 1'-0"

NUTKINS DESIGN GROUP

STATE OF COLORADO
WILLIAM E. NUTKINS JR.
403359
SEAL
LICENSED ARCHITECT

Gregg Residence

786 Aspen Bluff Lane - Lot 14 Red Sky Ranch
Wolcott, Colorado

Job #
2013-006

Issue Date
Permit - 07/27/2018

DRB Final - 06/07/2018

EXTERIOR ELEVATIONS

Revision	No.	Date

A304

7/27/2018 1:50:07 PM D:\NDG\Gregg\Gregg - MainCurrent 7-27.rvt

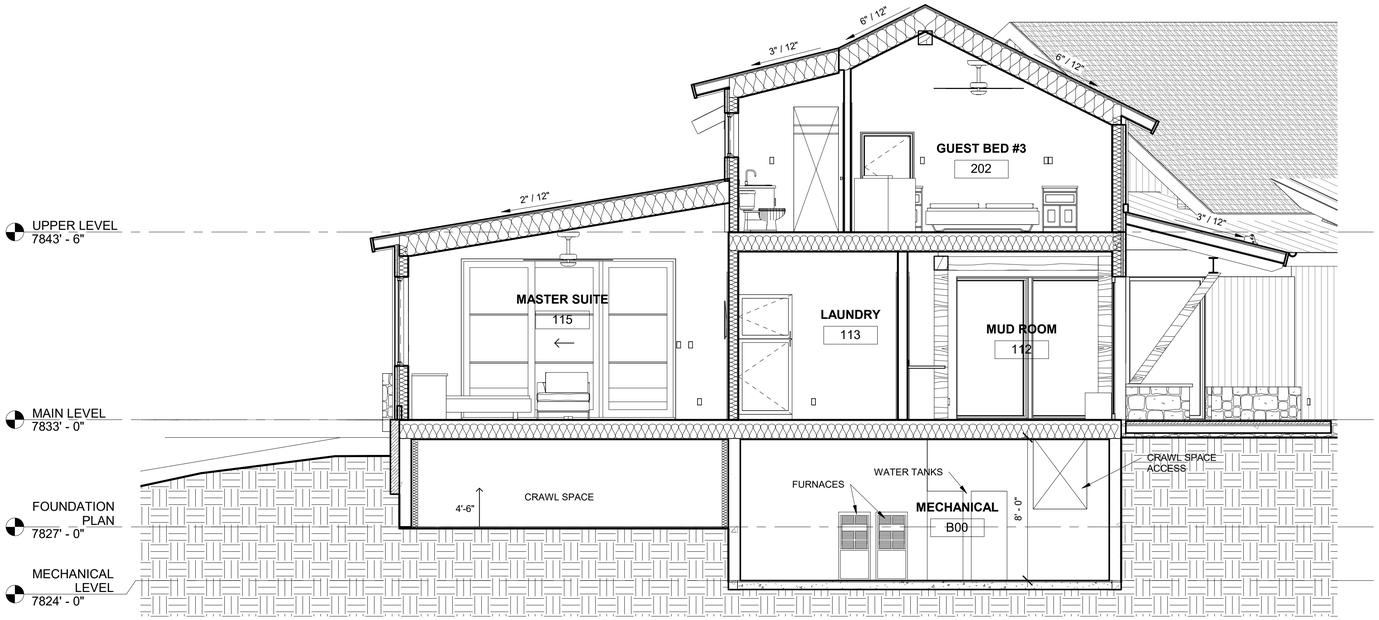

2 MASTER / MUD SECTION
1/4" = 1'-0"

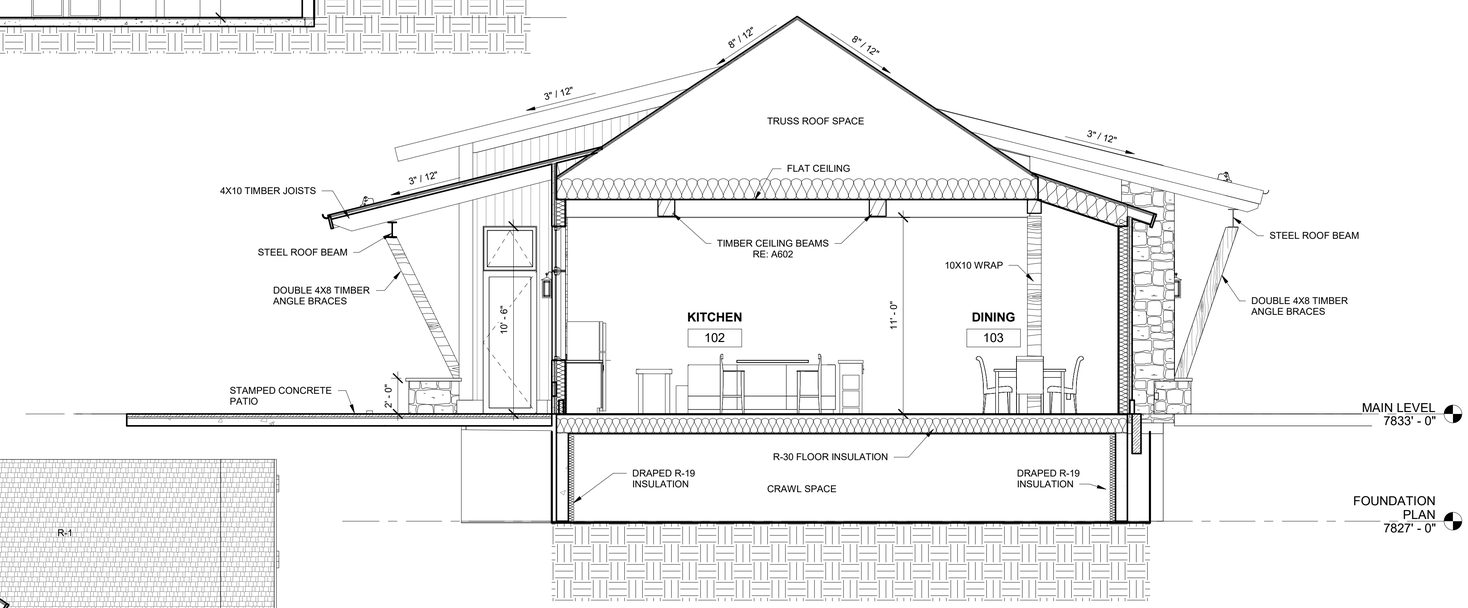

3 KITCHEN SECTION
1/4" = 1'-0"

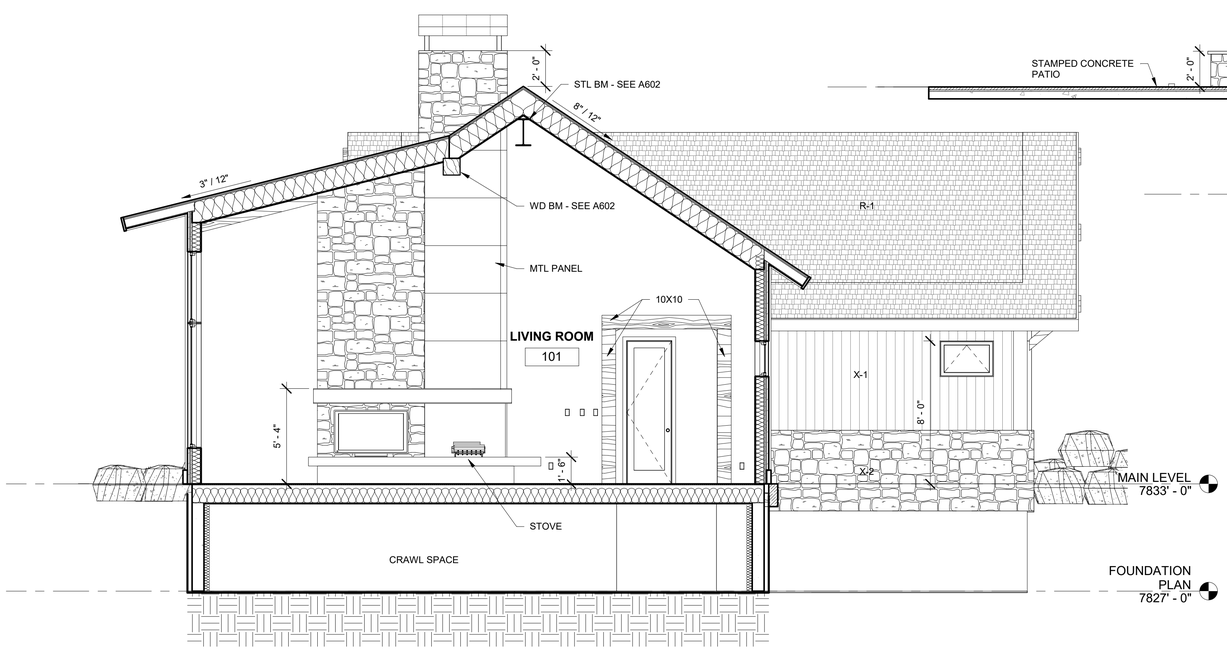

1 LIVING ROOM - FIREPLACE SECTION
1/4" = 1'-0"

7/27/2018 1:50:14 PM D:\NDG\Gregg\Gregg - MainCurrent 7-27.rvt

NUTKINS DESIGN GROUP

STATE OF COLORADO
WILLIAM E. NUTKINS JR.
403359
SEAL
LICENSED ARCHITECT

Gregg Residence
786 Aspen Bluff Lane - Lot 14 Red Sky Ranch
Wolcott, Colorado

Job #
2013-006

Issue Date
Permit - 07/27/2018
DRB Final - 06/07/2018

BUILDING SECTIONS

Revision	No.	Date

A401

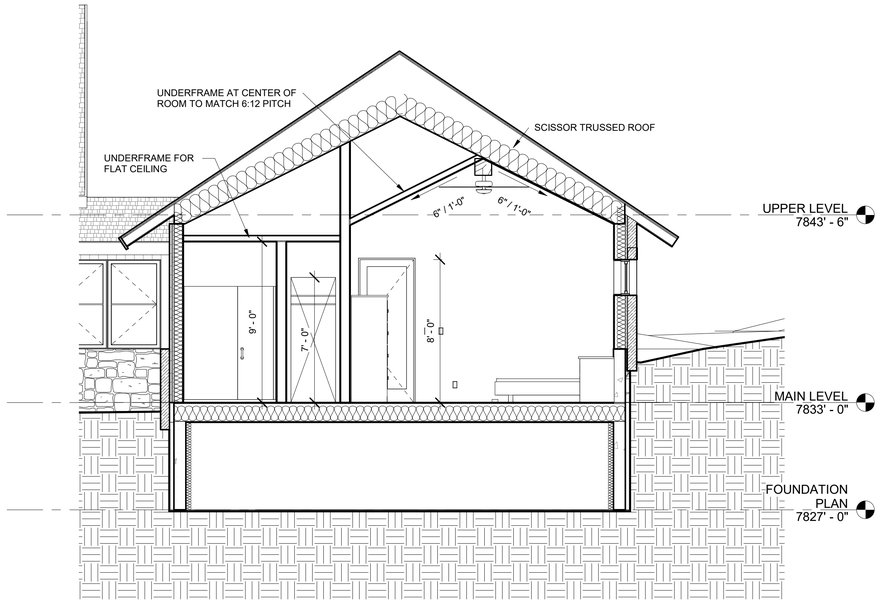

2 GUEST SUITE SECTION
1/4" = 1'-0"

1 NORTH SOUTH SECTION
1/4" = 1'-0"

7/27/2018 1:50:20 PM D:\NDG\Gregg\Gregg - MainCurrent 7-27.rvt

NUTKINS DESIGN GROUP

STATE OF COLORADO
WILLIAM E. NUTKINS JR.
403359
SEAL
LICENSED ARCHITECT

Gregg Residence

786 Aspen Bluff Lane - Lot 14 Red Sky Ranch
Wolcott, Colorado

Job #
2013-006

Issue Date
Permit - 07/27/2018
DRB Final - 06/07/2018

BUILDING SECTIONS

Revision	No.	Date

A402

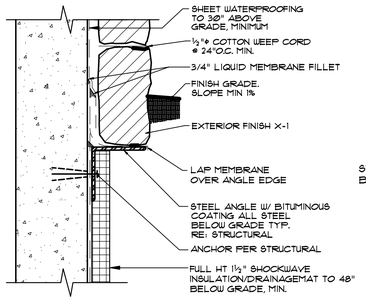

1 STONE SUPPORT DETAIL
SCALE: 1 1/2" = 1'-0"

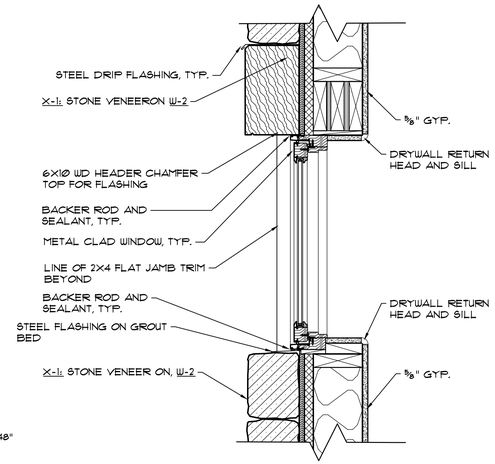

2 WD HEAD IN STONE DETAIL
SCALE: 1 1/2" = 1'-0"

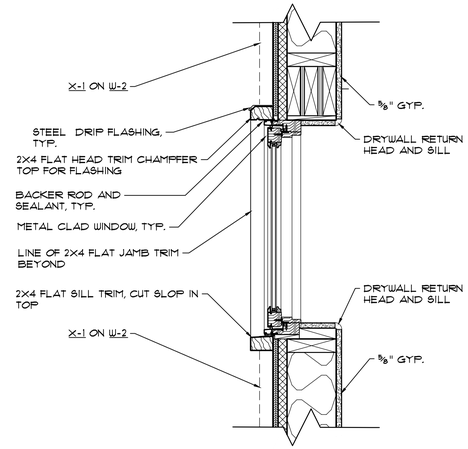

3 TYPICAL WINDOW DETAIL
SCALE: 1 1/2" = 1'-0"

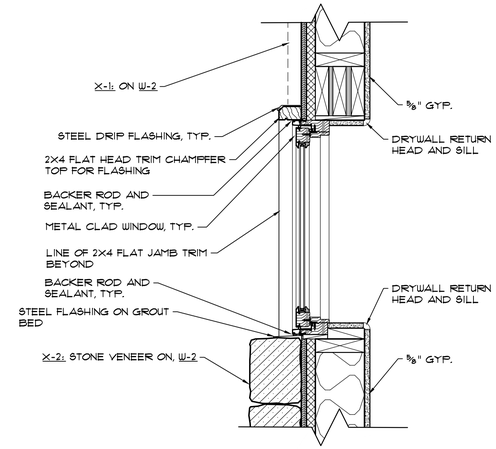

4 TYPICAL WINDOW DETAIL
SCALE: 1 1/2" = 1'-0"

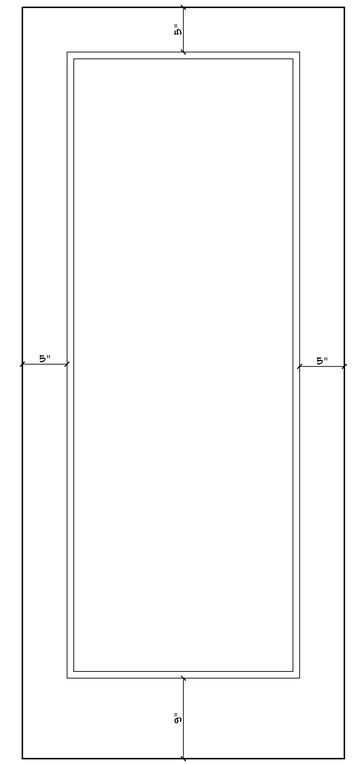

8 TYP. DOOR DETAIL
SCALE: 1-1/2" = 1'-0"

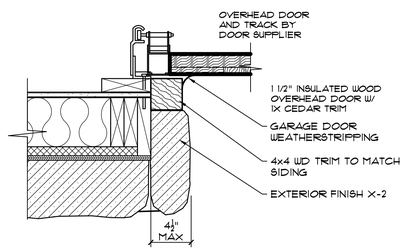

5 STONE GARAGE DOOR JAMB
SCALE: 1-1/2" = 1'-0"

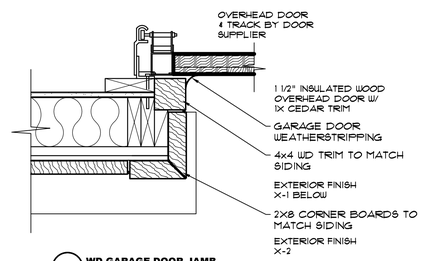

6 WD GARAGE DOOR JAMB
SCALE: 1-1/2" = 1'-0"

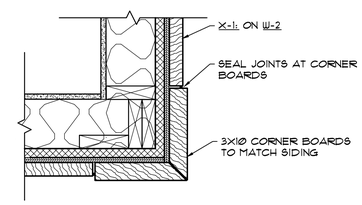

7 EXTERIOR CORNER TRIM DETAIL
SCALE: 3" = 1'-0"

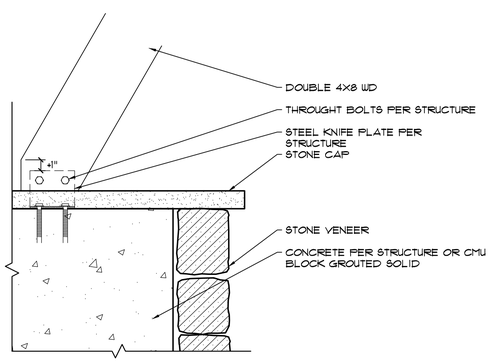

9 WOOD STRUT BASE DETAIL
SCALE: 1-1/2" = 1'-0"

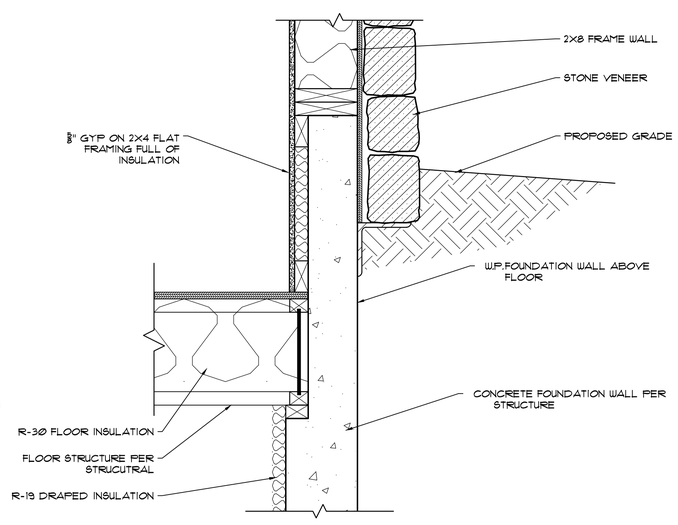

10 WALL DETAIL
SCALE: 1-1/2" = 1'-0"

NUTKINS DESIGN GROUP
P.O. BOX 3278 EAGLE, COLORADO 81631 (970) 471-1659

STATE OF COLORADO
WILLIAM E. NUTKINS JR.
403359
LICENSED ARCHITECT

Gregg Residence
786 Aspen Bluff Lane - Lot 14
Red Sky Ranch, Wolcott, Colorado

Job#:
2013-006

Issued:
Final DRB - 06/07/2018
Permit - 07/27/2018

Dwg. Name:
Construction Details

Revision	No.	Date

Sheet
A501

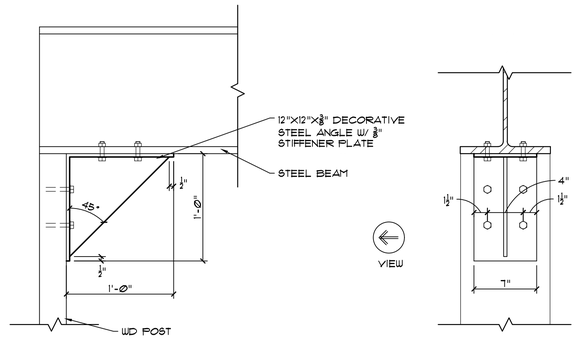

1 **DECORATIVE DETAIL @ KITCHEN/LIVING**
SCALE: 1-1/2" = 1'-0"

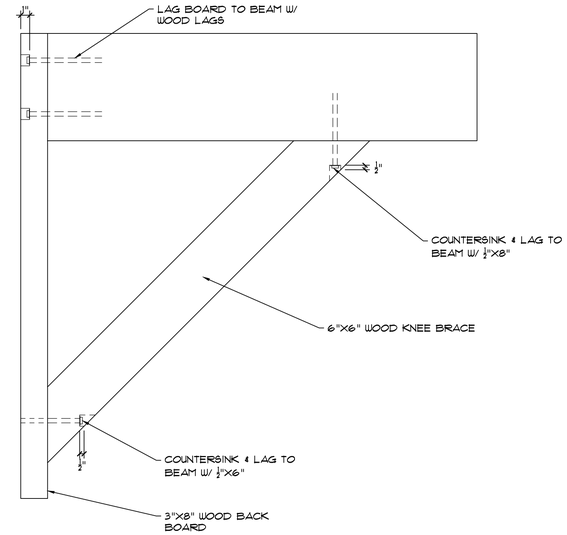

2 **KNEE BRACE DETAIL**
SCALE: 1-1/2" = 1'-0"

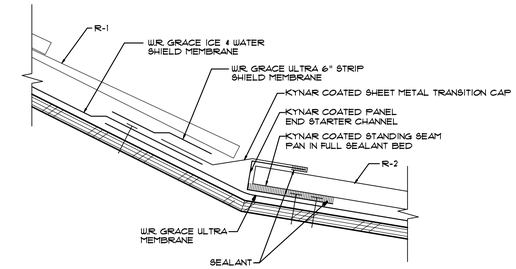

3 **PITCH TRANSITION DETAIL**
SCALE: 3" = 1'-0"

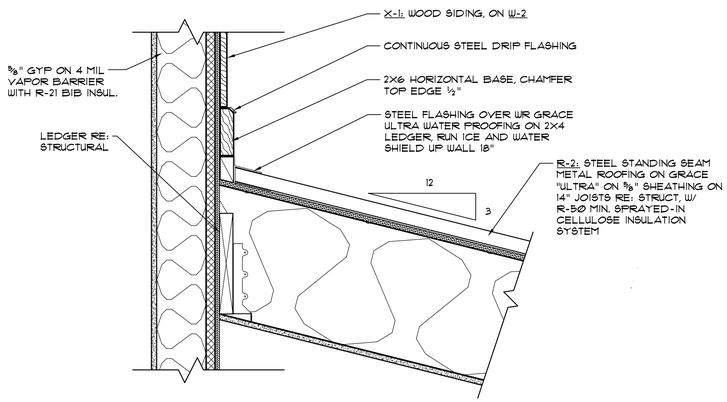

4 **ROOF CURB DETAIL**
SCALE: 1 1/2" = 1'-0"

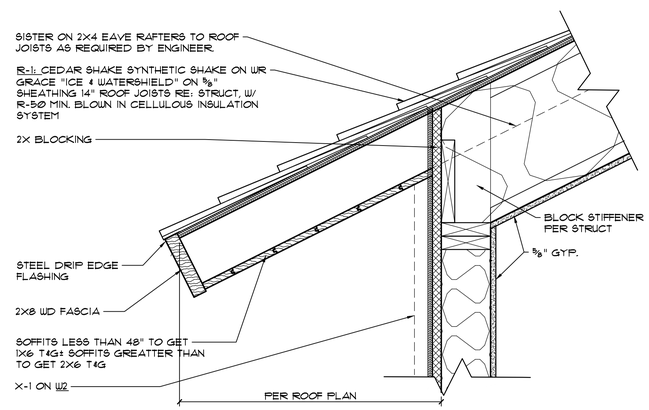

5 **TYPICAL EAVE DETAIL**
SCALE: 1 1/2" = 1'-0"

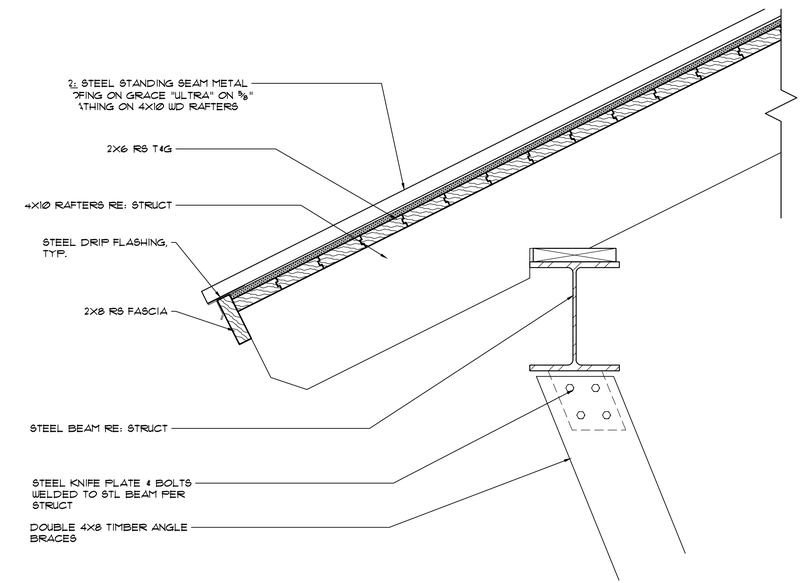

6 **COVERED DECK EAVE DETAIL**
SCALE: 1 1/2" = 1'-0"

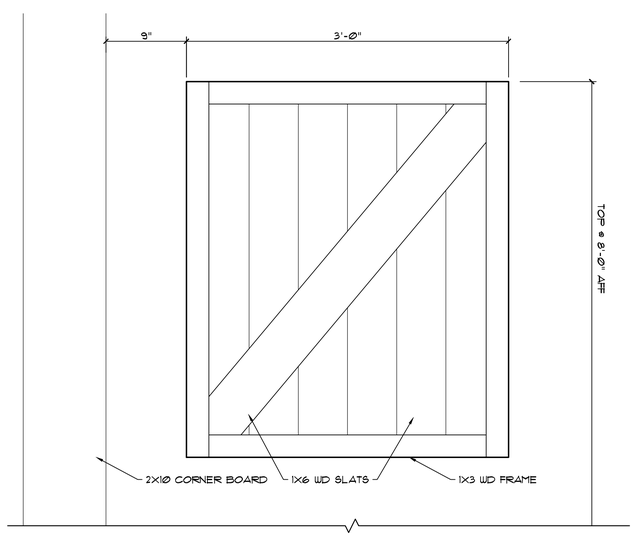

7 **SHUTTER DETAIL**
SCALE: 1-1/2" = 1'-0"

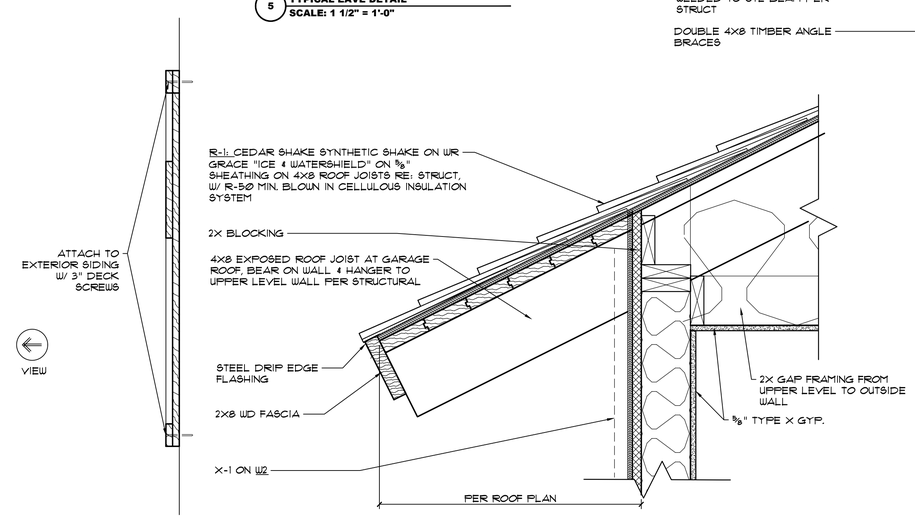

8 **TYPICAL EAVE DETAIL w/ RAFTERS**
SCALE: 1 1/2" = 1'-0"

NUTKINS DESIGN GROUP
P.O. BOX 3278 VAIL, CO. 81658 (970) 471-1659

Seal
STATE OF COLORADO
WILLIAM E. NUTKINS JR.
403359
LICENSED ARCHITECT

Gregg Residence
786 Aspen Bluff Lane - Lot 14
Red Sky Ranch, Wolcott, Colorado

Job#:
2013-006

Issued:
Final DRB - 06/07/2018
Permit - 07/27/2018

Dwg. Name:
Construction Details

Revision	No.	Date

Sheet
A502

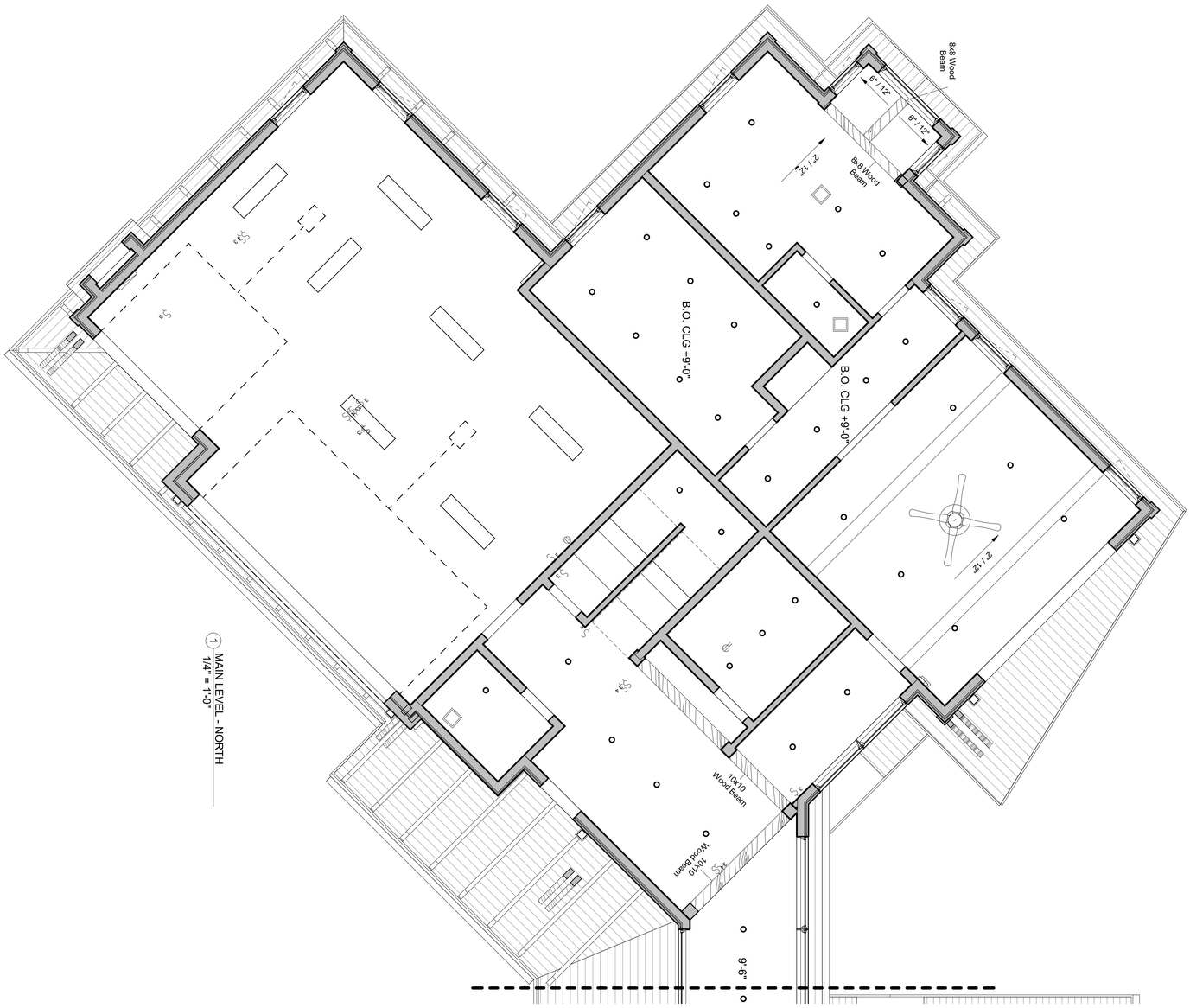

1 MAIN LEVEL - NORTH
1/4" = 1'-0"

Revision	No.	Date

A601

MAIN LEVEL RCP - NORTH

Job #
2013-006

Issue Date
Permit - 07/27/2018
DRB Final - 06/07/2018

Gregg Residence

786 Aspen Bluff Lane - Lot 14 Red Sky Ranch
Wolcott, Colorado

STATE OF COLORADO
WILLIAM E. NUTKINS JR.
403359
SEAL
LICENSED ARCHITECT

NDG
NUTKINS DESIGN GROUP

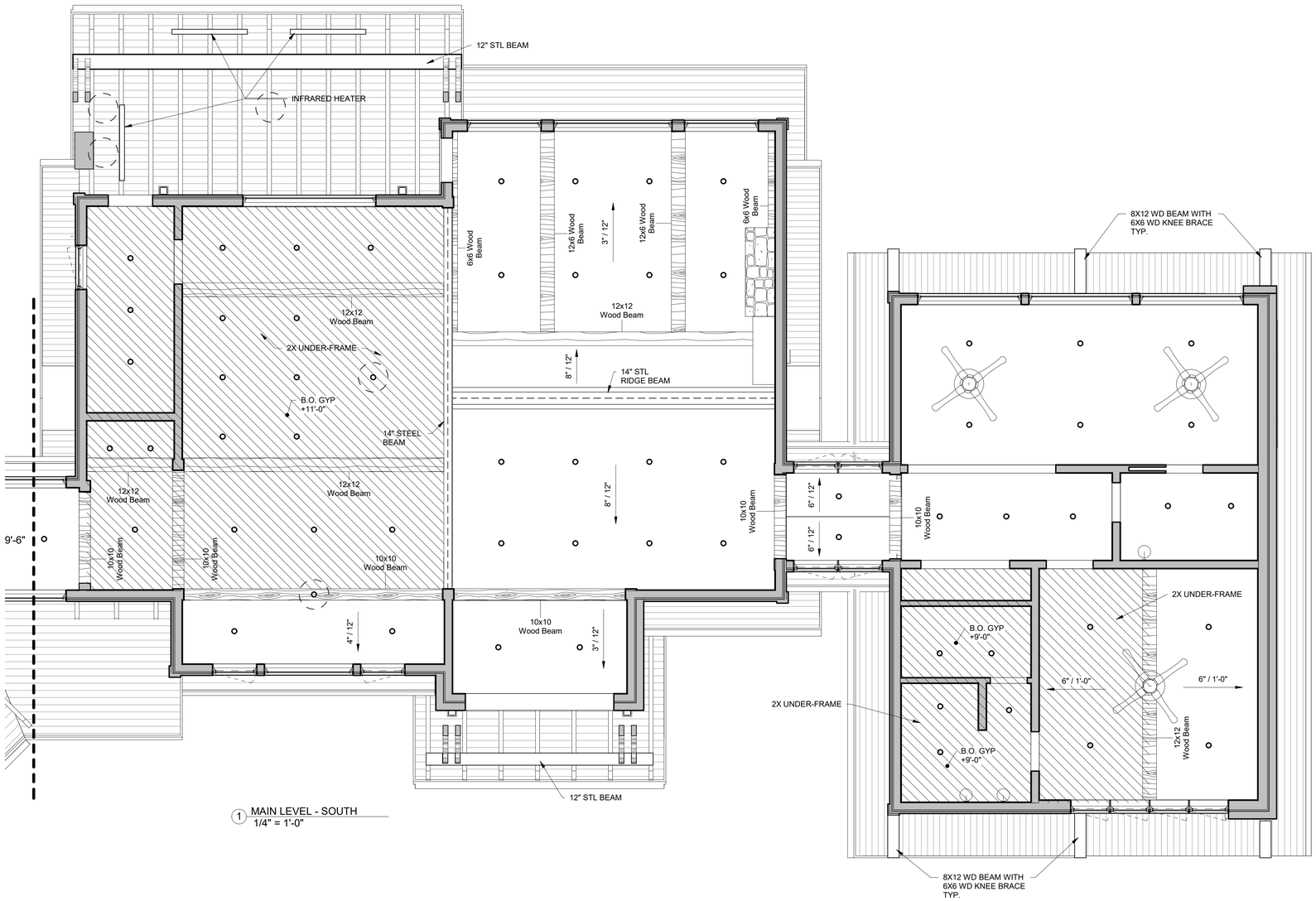

1 MAIN LEVEL - SOUTH
1/4" = 1'-0"

7/27/2018 1:50:40 PM D:\NDG\Gregg\Gregg - MainCurrent 7-27.rvt

NUTKINS DESIGN GROUP

STATE OF COLORADO
WILLIAM E. NUTKINS JR.
403359
SEAL
LICENSED ARCHITECT

Gregg Residence

786 Aspen Bluff Lane - Lot 14 Red Sky Ranch
Wolcott, Colorado

Job #
2013-006

Issue Date
Permit - 07/27/2018
DRB Final - 06/07/2018

MAIN LEVEL RCP - SOUTH

Revision	No.	Date

A602

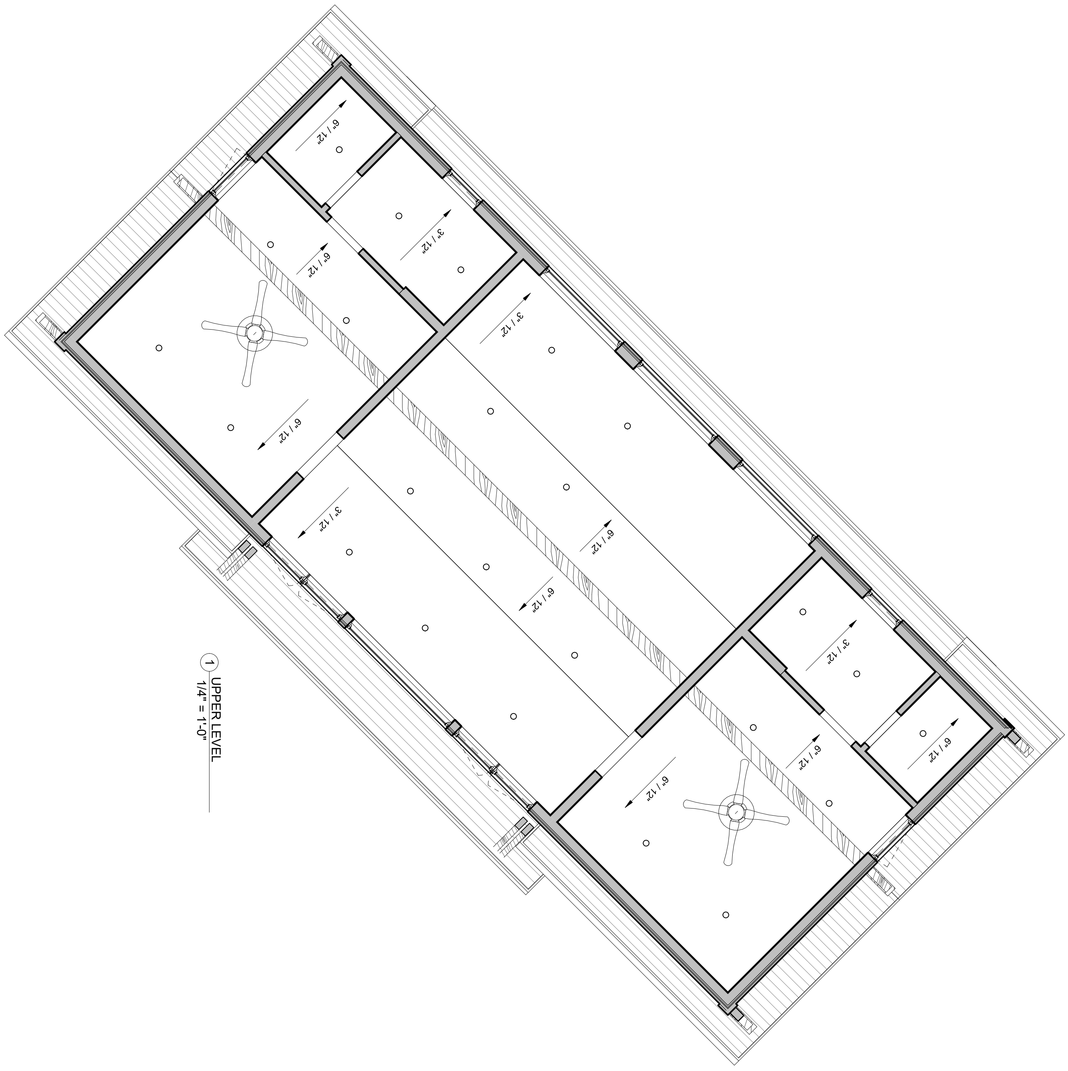

1 UPPER LEVEL
1/4" = 1'-0"

Revision	No.	Date

A603

UPPER LEVEL RCP

Job #
2013-006

Issue Date
Permit - 07/27/2018
DRB Final - 06/07/2018

Gregg Residence

786 Aspen Bluff Lane - Lot 14 Red Sky Ranch
Wolcott, Colorado

STATE OF COLORADO
WILLIAM E. NUTKINS JR.
403359
SEAL
LICENSED ARCHITECT

NDG
NUTKINS DESIGN GROUP

GENERAL

1. THE CONTRACTOR SHALL BE RESPONSIBLE FOR ALL MEANS AND METHODS OF CONSTRUCTION INCLUDING, BUT NOT LIMITED TO SHORING, BRACING, SLOPE STABILITY AND TEMPORARY EXCAVATION. THE CONTRACTOR AT HIS DISCRETION SHALL EMPLOY A LICENSED PROFESSIONAL TO DESIGN TEMPORARY SYSTEMS.

2. THE CONTRACTOR SHALL ASSUME COMPLETE RESPONSIBILITY FOR JOB SITE CONDITIONS DURING THE COURSE OF CONSTRUCTION, INCLUDING SAFETY OF ALL PERSONS AND PROPERTY, AND THIS REQUIREMENT SHALL APPLY CONTINUOUSLY AND NOT BE LIMITED TO NORMAL WORKING HOURS. ALL APPLICABLE JOB RELATED SAFETY STANDARDS SUCH AS OSHA SHALL BE FOLLOWED.

3. CONTRACTOR SHALL VERIFY ALL DIMENSIONS, ELEVATIONS AND EXISTING CONDITIONS PRIOR TO PROCEEDING WITH WORK. VARIATIONS BETWEEN THE PLANS AND ACTUAL CONDITIONS SHALL BE BROUGHT TO THE ATTENTION OF THE ENGINEER PRIOR TO PROCEEDING WITH THE WORK.

DESIGN CRITERIA

1. GOVERNING BUILDING CODE: INTERNATIONAL CODE COUNCIL (ICC) "INTERNATIONAL BUILDING CODE 2015"

2. REFERENCE CODES;

   A. AMERICAN CONCRETE INSTITUTE (ACI)
   "BUILDING CODE REQUIREMENTS FOR STRUCTURAL CONCRETE", ACI 318

   B. AMERICAN INSTITUTE FOR STEEL CONSTRUCTION (AISC)
   "SPECIFICATION FOR STRUCTURAL STEEL BUILDINGS, AISC 360
   "CODE OF STANDARD PRACTICE FOR STEEL BUILDINGS AND BRIDGES", AISC 305

   C. AMERICAN SOCIETY OF CIVIL ENGINEERS (ASCE)
   "MINIMUM DESIGN LOADS FOR BUILDINGS AND OTHER STRUCTURES", ASCE 7

   D. AMERICAN WELDING SOCIETY (AWS)
   " STRUCTURAL WELDING CODE" AWS D1.1

   E. AMERICAN WOOD COUNCIL
   "NATIONAL DESIGN SPECIFICATION FOR WOOD CONSTRUCTION", NDS

3. LOADS

   A. FLOOR LIVE LOADS .....40 psf

   B. ROOF SNOW LOAD .....70 psf

   C. WIND LOADS
   BASIC WIND SPEED, V .....115 mph
   WIND EXPOSURE CATEGORY.....B
   TOPOGRAPHIC FACTOR, Kt 1.0
   IMPORTANCE FACTOR 1.0

   D. SEISMIC LOADS
   OCCUPANCY CATEGORY 1.0
   SITE CLASS .....D
   SEISMIC DESIGN CATEGORY C
   Sds 0.387
   Sd1 .....0.124
   IMPORTANCE FACTOR 1.0

SUBMITTALS

1. SUBMITTALS OF SHOP DRAWINGS MILL TESTS, AND PRODUCT DATA SHALL BE MADE PRIOR TO CONSTRUCTION. SUBMITTAL SHALL BE MADE IN DUE TIME TO ALLOW FOR A TEN (10) WORKING DAY TURNAROUND.

2. SHOP DRAWING REVIEW BY THE ENGINEER IS FOR GENERAL CONFORMANCE WITH CONTRACT DOCUMENTS ONLY. DIMENSIONS AND QUANTITIES ARE NOT REVIEWED BY THE ENGINEER AND SHALL BE VERIFIED BY THE CONTRACTOR. MARKINGS OR COMMENTS SHALL NOT BE CONSTRUED AS RELIEVING THE CONTRACTOR FROM COMPLIANCE WITH THE PROJECT PLANS AND SPECIFICATIONS. WHERE SHOP DRAWINGS DIFFER FROM OR ADD TO THE REQUIREMENTS OF THE CONTRACT DOCUMENTS, THE ENGINEER SHALL REVIEW AND MAKE REQUIRED REVISIONS.

3. DEFERRED SUBMITTALS OR ITEMS DESIGNED BY OTHERS SHALL INCLUDE CALCULATIONS, SHOP DRAWINGS AND PRODUCT DATA AND SHALL BE SUBMITTED PRIOR TO CONSTRUCTION. REVIEW OF DEFERRED SUBMITTALS BY THE ENGINEER DOES NOT RELIEVE CONTRACTOR OR DESIGNER FOR COMPLIANCE WITH THE DESIGN CRITERIA AND COMPATIBILITY WITH THE PRIMARY STRUCTURE. DEFERRED SUBMITTALS INCLUDE BUT ARE NOT LIMITED TO;

   PREFABRICATED WOOD TRUSSES
   OPEN WEB STEEL JOISTS

INSPECTIONS

1. SPECIAL INSPECTIONS SHALL BE MADE IN ACCORDANCE WITH IBC 2015 SECTION 1704. THE CONTRACTOR IS RESPONSIBLE FOR SCHEDULING SPECIAL INSPECTIONS IN A TIMELY MANNER. SPECIAL INSPECTORS MUST BE RECOGNIZED AND APPROVED BY THE BUILDING OFFICIAL. SPECIAL INSPECTION REPORTS SHALL BE SUBMITTED TO THE ENGINEER TO RESOLVE ANY DISCREPANCIES.

2. STRUCTURAL OBSERVATIONS MAY BE PERFORMED BY THE ENGINEER. A REPORT WILL BE ISSUED IN ACCORDANCE WITH THE CONTRACT DOCUMENTS. STRUCTURAL OBSERVATIONS ARE NOT A SUBSTITUTE FOR SPECIAL INSPECTIONS. OBSERVATIONS WILL BE MADE TO DETERMINE GENERAL CONFORMANCE WITH THE CONSTRUCTION DOCUMENTS AND DOES NOT RELIEVE THE CONTRACTOR FOR COMPLIANCE WITH THE CONSTRUCTION DOCUMENTS.

SOILS & FOUNDATIONS

1. REFERENCE GEOTECHNICAL REPORT BY HP KUMAR, INC.
   REPORT NO. 18-7-201 DATED 5-21-18.

   ALLOWABLE BEARING PRESSURE .....3500 psf

2. THE CONTRACTOR SHALL REVIEW THE GEOTECHNICAL REPORT AND SHALL FOLLOW ALL RECOMMENDATIONS PROVIDED THEREIN.

3. THE GEOTECHNICAL ENGINEER SHALL INSPECT ALL EXCAVATIONS AND FILL PLACEMENT TO ENSURE CONFORMANCE WITH THE SPECIFICATIONS. ASSUMED VALUES SHALL BE VERIFIED BY A GEOTECHNICAL ENGINEER OR THE BUILDING OFFICIAL PRIOR TO PLACING CONCRETE.

4. FOOTING EXCAVATIONS SHALL BE CLEAN AND FREE FROM LOOSE DEBRIS, STANDING WATER, OR UN-COMPACTED MATERIAL AT TIME OF CONCRETE PLACEMENT.

5. FOUNDATIONS SHALL BEAR ON UNDISTURBED SOIL OR COMPACTED STRUCTURAL FILL PER THE RECOMMENDATIONS OF THE GEOTECHNICAL REPORT.

CONCRETE

1. CONCRETE SHALL BE DESIGNED, SUPPLIED AND CONSTRUCTED IN ACCORDANCE WITH ACI 318 LATEST EDITION.

2. CONCRETE STRENGTH f'c @ 28 DAYS SHALL CONFORM TO THE FOLLOWING;

   FOOTINGS, WALLS .....f'c = 3000 psi
   FLATWORK, SLABS .....f'c = 4000 psi

3. PORTLAND CEMENT SHALL CONFORM TO ASTM C-150 TYPE I/II.

4. WATER FOR MIXING CONCRETE SHALL CONFORM TO ASTM C1602.

5. COURSE AND FINE AGGREGATE SHALL CONFORM TO ASTM C-33.

6. SLUMP SHALL CONFORM TO ACI 301 AND SHALL BE TAKEN AT THE POINT OF PLACEMENT. SLUMP SHALL NOT EXCEED 4 INCHES.

7. FLYASH SHALL CONFORM TO ASTM C618 CLASS C OR F. FLYASH SHALL NOT EXCEED 20% OF THE TOTAL CEMENTITIOUS MATERIAL.

8. HOT WEATHER PLACEMENT SHALL CONFORM TO ACI 305, "SPECIFICATION FOR HOT WEATHER CONCRETING".
   COLD WEATHER PLACEMENT SHALL CONFORM TO ACI 306, "GUIDE TO COLD WEATHER CONCRETING".

9. ADMIXTURES FOR WATER REDUCTION AND SETTING TIME MODIFICATION SHALL BE IN CONFORMANCE WITH ASTM C494.

10. ADMIXTURES FOR USE IN FLOWING CONCRETE SHALL CONFORM TO ASTM C1017.

11. ADMIXTURES SHALL NOT CONTAIN CALCIUM CHLORIDE. CONCRETE SHALL NOT BE PLACED IN CONTACT WITH ALUMINUM.

12. AIR ENTRAINMENT SHALL BE 4.0 - 7.0%. AIR ENTRAINMENT ADMIXTURES SHALL CONFORM TO ASTM C260.
    W/C RATIO SHALL NOT EXCEED 0.45

13. HEADED STUDS AND HEADED STUD ASSEMBLIES SHALL CONFORM TO ASTM A1044.

14. HIGH STRENGTH NO SHRINK GROUT SHALL BE MASTERBUILDERS 928 OR APPROVED EQUAL.

15. ADHESIVE FOR DRILL & EPOXY ANCHORS SHALL BE HIT RE500 AS MFG. BY HILTI INC. OR APPROVED EQUAL.

STRUCTURAL STEEL

1. STRUCTURAL STEEL DESIGN, FABRICATION AND ERECTION SHALL BE IN ACCORDANCE WITH AISC STEEL CONSTRUCTION MANUAL, 13TH EDITION.

2. MATERIALS;

   A. WIDE FLANGE SHAPES .....ASTM A992 GRADE 50

   B. PLATES, ANGLES, CHANNELS .....ASTM A36

   C. HOLLOW STRUCTURAL SECTIONS (HSS) .....ASTM A500, GRADE B

   D. PIPE .....ASTM A53 GRADE B

   E. HIGH STRENGTH BOLTS .....ASTM A325-X

   F. MACHINE BOLTS .....ASTM A307

   F. WELDING ELECTRODES .....AWS D1.1 (E70XX)

   G. ANCHOR BOLTS .....ASTM F1554 GRADE 36

3. CONNECTIONS SHALL BE DESIGNED IN ACCORDANCE WITH AISC 360. ALL BOLTED CONNECTIONS SHALL HAVE A MINIMUM OF 2 BOLTS. MINIMUM BOLT SIZE SHALL BE 3/4"ø U.N.O. MINIMUM WELD SIZE SHALL CONFORM TO AISC 360. HIGH STRENGTH BOLTS SHALL BE TIGHTENED TO A SNUG TIGHT CONDITION PER ASTM A325 U.N.O.

4. ANCHOR BOLTS SHALL BE GALVANIZED IN ACCORDANCE WITH ASTM A123.

5. STRUCTURAL STEEL SHALL BE CLEANED TO MEET THE REQUIREMENTS OF SSPC-SP2. STRUCTURAL STEEL SHALL BE COATED WITH SHOP COAT RED OXIDE PRIMER.

6. HOLES, NOTCHES, AND CUTS SHALL NOT BE MADE IN STRUCTURAL STEEL MEMBERS WITHOUT ENGINEER'S APPROVAL.

REINFORCING STEEL

1. FABRICATION AND PLACEMENT OF REINFORCING BARS SHALL CONFORM TO;
   ACI 301 "SPECIFICATION FOR STRUCTURAL CONCRETE"
   ACI SP-66 "ACI DETAILING MANUAL".

2. REINFORCING BARS SHALL BE DEFORMED AND IN ACCORDANCE WITH ASTM A615 GRADE 60.

3. WELDING OF REINFORCING BARS IS PROHIBITED WITHOUT PRIOR APPROVAL. WELDED BARS SHALL CONFORM TO ASTM A706 GRADE 60. WELDING SHALL CONFORM TO AWS D1.4.

4. CONCRETE COVER SHALL BE AS FOLLOWS;

   CAST AGAINST OR PERMANENTLY EXPOSED TO EARTH .....3"

   EXPOSED TO EARTH OR WEATHER
   #5 BAR OR SMALLER ..... 1 1/2"
   #6 BAR AND LARGER .....2"

   NOT EXPOSED TO EARTH
   SLABS WALLS AND JOISTS
   #14 AND #18 BARS ..... 1 1/2"
   #11 BARS AND SMALLER .....3/4"

   BEAMS AND COLUMNS
   PRIMARY REINFORCEMENT, TIES,
   STIRRUPS AND SPIRALS .....1 1/2"

5. REINFORCING BARS #5 AND SMALLER SHALL BE BENT COLD ONE TIME ONLY. ALL OTHER BARS REQUIRE PREHEAT.

6. LAP SPLICES SHALL BE CLASS "B" AND SHALL BE STAGGERED. SPLICES SHALL BE PROVIDED AS REQUIRED PER THE THE FOLLOWING TABLE;

REINFORCING SPLICE LENGTHS

BAR SIZE	SPLICE LENGTH (in.) VERTICALS & BOTTOM BARS	SPLICE LENGTH (in.) TOP BARS
#3	20"	24"
#4	24"	30"
#5	30"	39"
#6	35"	46"
#7	63"	82"
#8	72"	94"
#9	81"	106"
#10	89"	116"
#11	98"	128"

* TOP BARS = HORIZONTAL REINFORCEMENT SO PLACED THAT MORE THAN 12" OF CONCRETE IS CAST IN MEMBER BELOW THE SPLICE.

WOOD

1. WOOD CONSTRUCTION SHALL CONFORM WITH THE FOLLOWING REFERENCE STANDARDS;

   A. NDS "NATIONAL DESIGN SPECIFICATION FOR WOOD CONSTRUCTION"

   B, ANSI / TPI 1 " NATIONAL DESIGN STANDARD FOR METAL PLATE CONNECTED WOOD TRUSS CONSTRUCTION"

   C. TPI HIIB "COMMENTARY AND RECOMMENDATIONS FOR HANDLING, INSTALLING & BRACING METAL PLATE CONNECTED WOOD TRUSSES"

2. MATERIALS;

   A. SAWN LUMBER

   2x STUDS .....DOUG-FIR No. 2
   SILL PLATES .....PT DOUG-FIR No. 2
   JOISTS, RAFTERS .....DOUG-FIR No. 2
   POSTS & BEAMS .....DOUG-FIR No. 1

   B. ROUGH SAWN LUMBER (U.N.O.)

   8x AND SMALLER .....DOUG-FIR No. 1
   10x AND LARGER .....DOUG-FIR No. 2

   C. LAMINATED VENEER LUMBER (LVL)

   Fb = 2600 psi
   Fv = 285 psi
   E = 1,900,000 psi

   D. GLUE LAMINATED BEAMS (GLB) SHALL BE 24-V4 FOR SIMPLE SPANS AND 24-V8 FOR CANTILEVERED SPANS.

   Fb = 2400 psi
   Fv = 210 psi
   E = 1,700,000 psi

   E. LAMINATED STRAND LUMBER (LSL)

   Fb = 1700 psi
   Fv = 150 psi
   E = 1,300,000 psi

3. ALL SAWN LUMBER AND ENGINEERED LUMBER SHALL BE IDENTIFIED BY A GRADE MARK ISSUED BY WWPA, WCLB OR NLGA.

4. NAILS SHALL BE COMMON NAILS. DESIGN IS BASED ON THE FOLLOWING SIZES;

SIZE	DIAMETER	LENGTH
8d	0.131"	2 1/2"
10d	0.148"	3"
12d	0.150"	3"
16d	0.162"	3 1/2"
20d	0.192"	4"

5. BOLTS FOR WOOD CONNECTIONS SHALL BE IN ACCORDANCE WITH ASTM A307. GRADE A. LAG SCREWS SHALL BE IN ACCORDANCE WITH ASTM A307 GRADE A.

6. CONNECTION HARDWARE SHALL BE AS MANUFACTURED BY SIMPSON STRONG-TIE OR APPROVED EQUAL.

7. SHEATHING SHALL CONFORM TO STANDARDS PS-1 AND PS-2 AND SHALL BEAR THE STAMP OF THE AMERICAN PLYWOOD ASSOCIATION (APA). SHEATHING MAY BE PLYWOOD OR OSB FOR WALLS AND ROOFING. FLOOR SHEATHING SHALL BE TONGUE & GROOVE PLYWOOD STURDI-FLOOR.

USE	THICKNESS	SPAN RATING	GRADE	EXPOSURE
ROOF	19/32"	32/16	C-D	1
FLOOR	23/32" T&G	48/24	STURDI-FLOOR	1
WALLS	15/32"	32/16	C-D	1

8. ALL WOOD PRODUCTS SHALL BE KILN DRIED WITH A MAXIMUM MOISTURE CONTENT OF 19%. MOISTURE CONTENT SHALL BE DETERMINED IN ACCORDANCE WITH ASTM D4442.

9. PROVIDE DOUBLE JOISTS UNDER STUD WALLS U.N.O.

COLORADO REGISTERED LARSON KENT ANDERSON 35436 PROFESSIONAL ENGINEER
7-26-18

ANDERSON STRUCTURAL ENGINEERING, INC.
823 GRAND AVE.
SUITE 340
GLENWOOD SPGS, CO. 81601
(970) 984-0320

GREGG RESIDENCE

786 ASPEN BLUFF LANE - LOT 14 RED SKY RANCH
WOLCOTT, CO 81632
EAGLE COUNTY

ASE Project No.:1800-32
Drawn By: ADC
Checked By: LKA

Revision	Date
COORDINATION	7-6-18
PERMIT	7-26-18

GENERAL NOTES

Sheet

S1.0

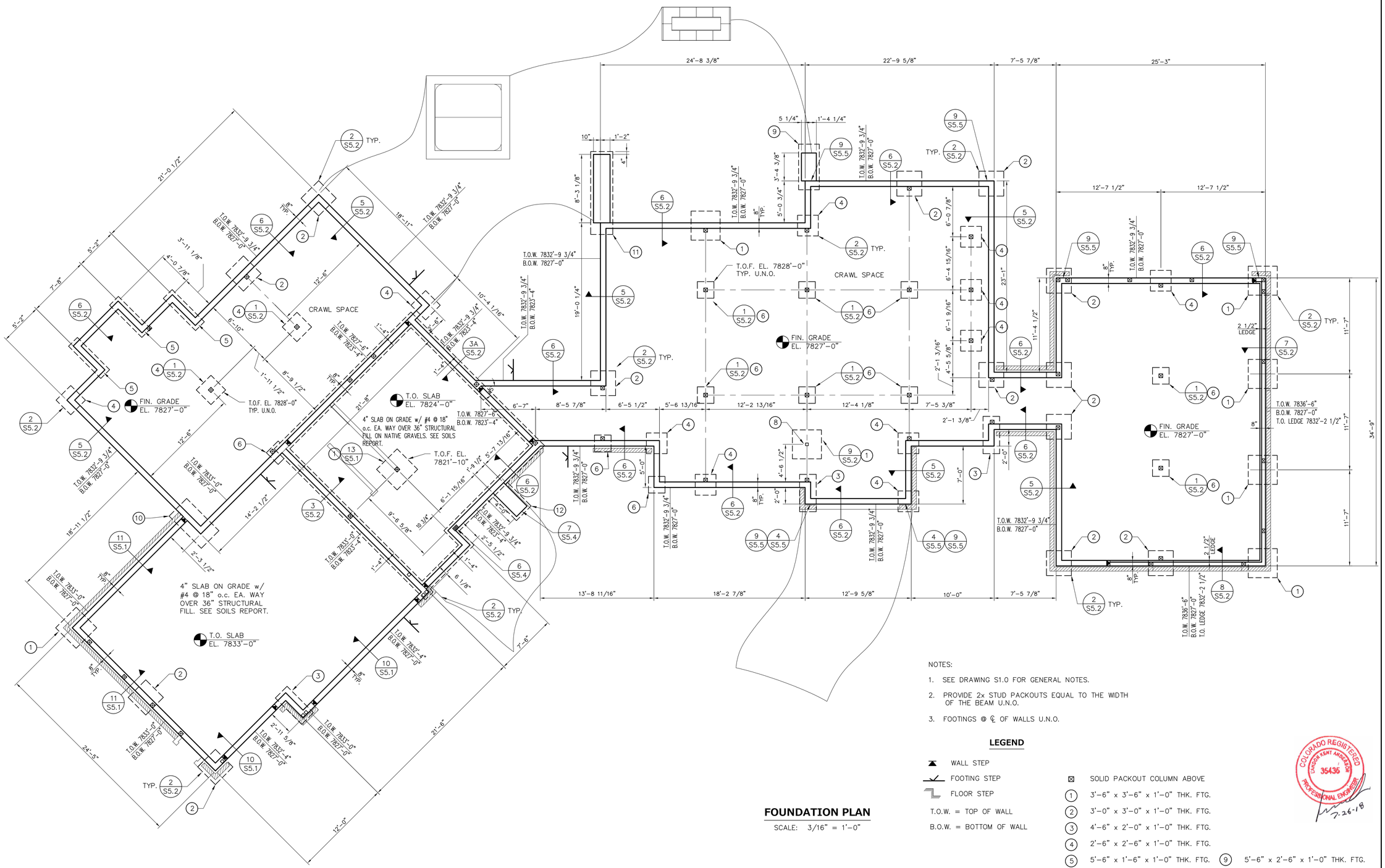

FOUNDATION PLAN

SCALE: 3/16" = 1'-0"

NOTES:

1. SEE DRAWING S1.0 FOR GENERAL NOTES.
2. PROVIDE 2x STUD PACKOUTS EQUAL TO THE WIDTH OF THE BEAM U.N.O.
3. FOOTINGS @ ℄ OF WALLS U.N.O.

LEGEND

- WALL STEP
- FOOTING STEP
- FLOOR STEP
- T.O.W. = TOP OF WALL
- B.O.W. = BOTTOM OF WALL
- SOLID PACKOUT COLUMN ABOVE
- (1) 3'-6" x 3'-6" x 1'-0" THK. FTG.
- (2) 3'-0" x 3'-0" x 1'-0" THK. FTG.
- (3) 4'-6" x 2'-0" x 1'-0" THK. FTG.
- (4) 2'-6" x 2'-6" x 1'-0" THK. FTG.
- (5) 5'-6" x 1'-6" x 1'-0" THK. FTG.
- (6) 2'-0" x 2'-0" x 1'-0" THK. FTG.
- (7) 7'-0" x 1'-6" x 1'-0" THK. FTG.
- (8) HSS 4 x 4 x 1/4 ABOVE
- (9) 5'-6" x 2'-6" x 1'-0" THK. FTG.
- (10) 5'-6" x 3'-0" x 1'-0" THK. FTG.
- (11) 10'-0" x 2'-8" x 1'-0" THK. FTG.
- (12) 4'-0" x 2'-6" x 1'-0" THK. FTG.

COLORADO REGISTERED LARSON KENT ANDERSON 35436 PROFESSIONAL ENGINEER
7-26-18

ANDERSON STRUCTURAL ENGINEERING, INC.
823 GRAND AVE.
SUITE 340
GLENWOOD SPGS, CO. 81601
(970) 984-0320

GREGG RESIDENCE

786 ASPEN BLUFF LANE - LOT 14 RED SKY RANCH
WOLCOTT, CO 81632
EAGLE COUNTY

ASE Project No.:1800-32
Drawn By: ADC
Checked By: LKA

Revision	Date
COORDINATION	7-6-18
PERMIT	7-26-18

FOUNDATION PLAN

Sheet

S1.1

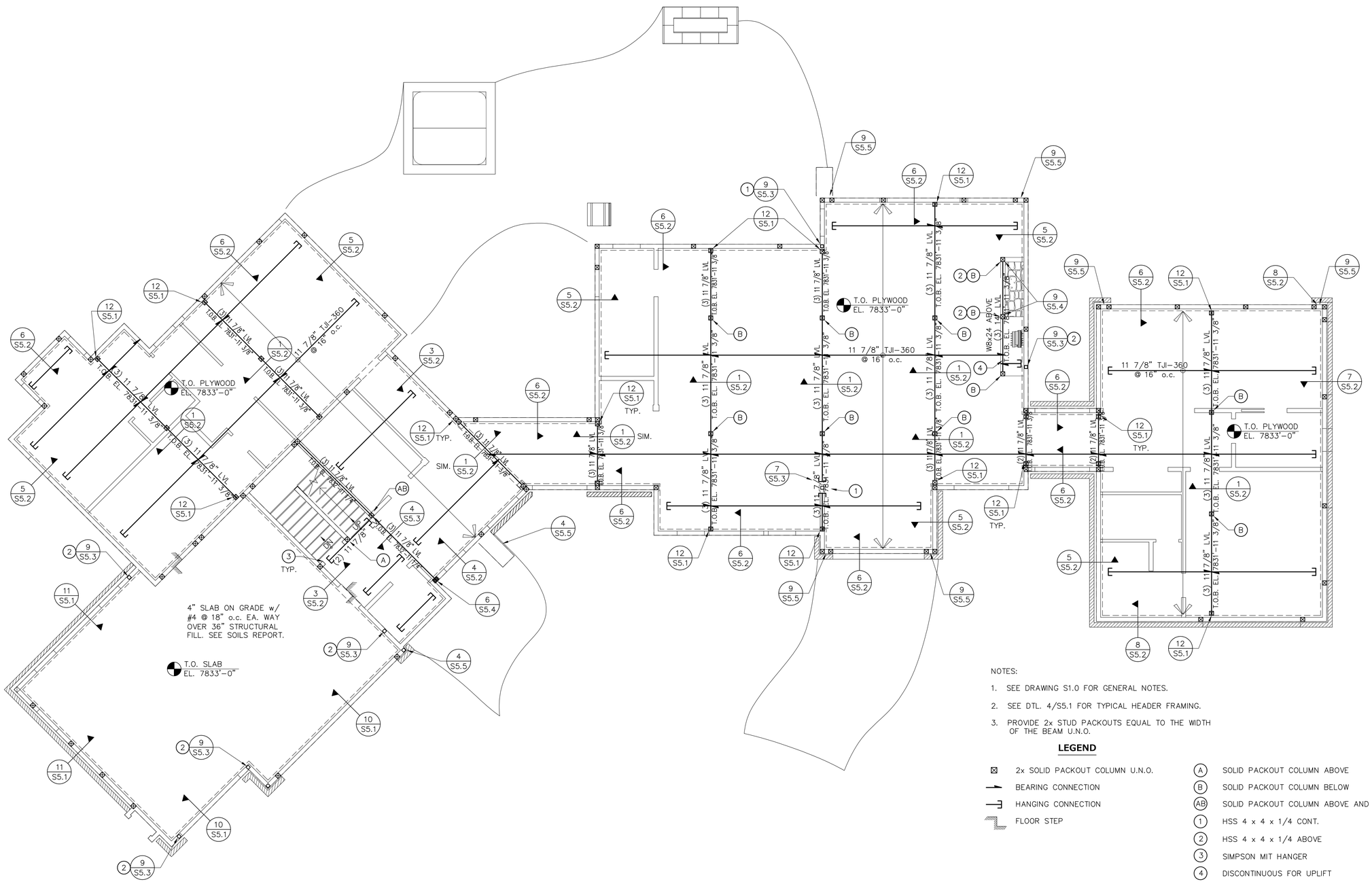

MAIN LEVEL FRAMING PLAN

SCALE: 3/16" = 1'-0"

NOTES:

1. SEE DRAWING S1.0 FOR GENERAL NOTES.
2. SEE DTL. 4/S5.1 FOR TYPICAL HEADER FRAMING.
3. PROVIDE 2x STUD PACKOUTS EQUAL TO THE WIDTH OF THE BEAM U.N.O.

LEGEND

- ⊠ 2x SOLID PACKOUT COLUMN U.N.O.
- BEARING CONNECTION
- HANGING CONNECTION
- FLOOR STEP
- (A) SOLID PACKOUT COLUMN ABOVE
- (B) SOLID PACKOUT COLUMN BELOW
- (AB) SOLID PACKOUT COLUMN ABOVE AND BELOW
- (1) HSS 4 x 4 x 1/4 CONT.
- (2) HSS 4 x 4 x 1/4 ABOVE
- (3) SIMPSON MIT HANGER
- (4) DISCONTINUOUS FOR UPLIFT

COLORADO REGISTERED LARSON KENT ANDERSON 35436 PROFESSIONAL ENGINEER
7-26-18

ANDERSON STRUCTURAL ENGINEERING, INC.
823 GRAND AVE.
SUITE 340
GLENWOOD SPGS, CO. 81601
(970) 984-0320

GREGG RESIDENCE

786 ASPEN BLUFF LANE - LOT 14 RED SKY RANCH
WOLCOTT, CO 81632
EAGLE COUNTY

ASE Project No.: 1800-32
Drawn By: ADC
Checked By: LKA

Revision	Date
COORDINATION	7-6-18
PERMIT	7-26-18

MAIN LEVEL FRAMING PLAN

Sheet

S1.2

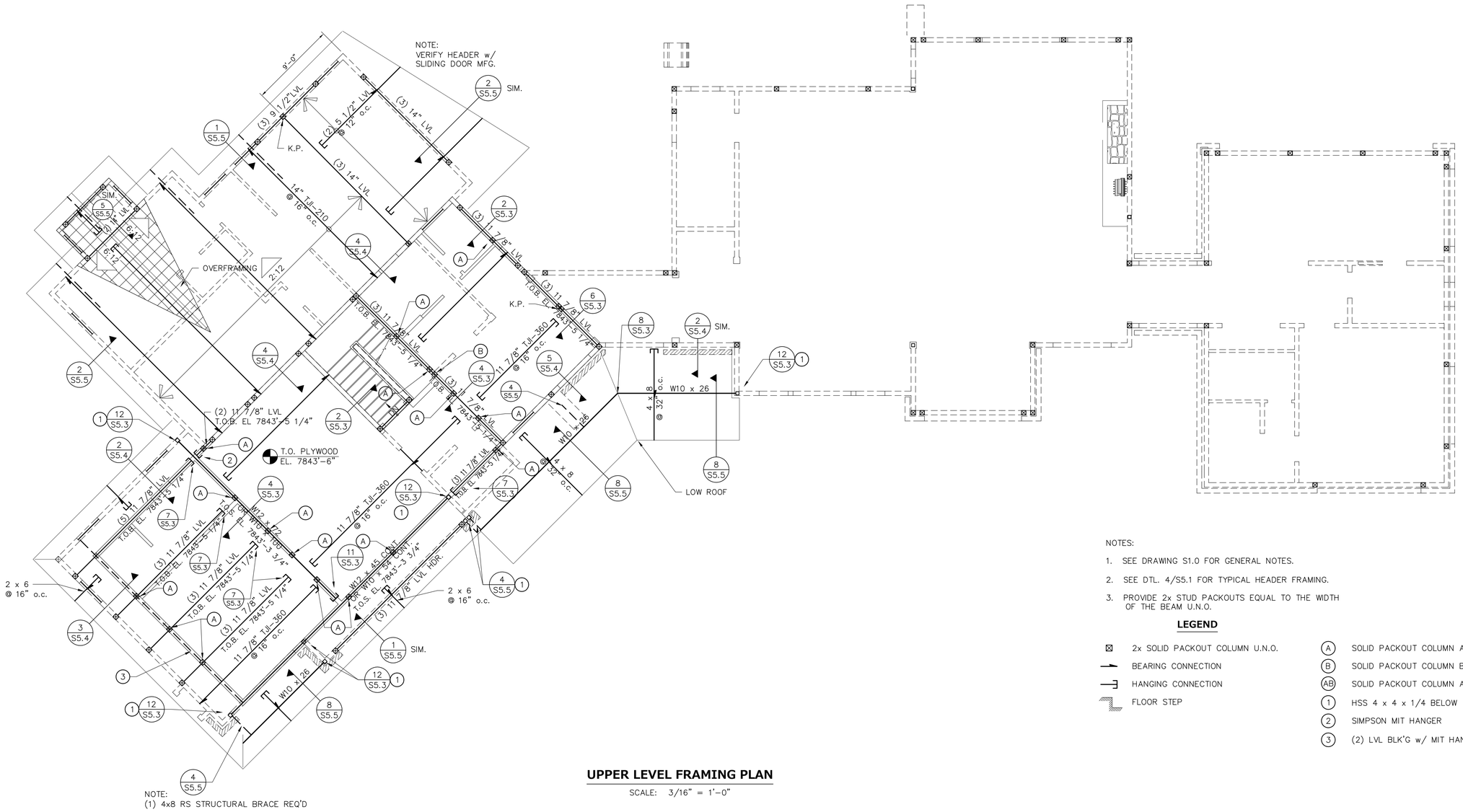

UPPER LEVEL FRAMING PLAN

SCALE: 3/16" = 1'-0"

NOTES:

1. SEE DRAWING S1.0 FOR GENERAL NOTES.
2. SEE DTL. 4/S5.1 FOR TYPICAL HEADER FRAMING.
3. PROVIDE 2x STUD PACKOUTS EQUAL TO THE WIDTH OF THE BEAM U.N.O.

LEGEND

- ⊠ 2x SOLID PACKOUT COLUMN U.N.O.
- BEARING CONNECTION
- HANGING CONNECTION
- FLOOR STEP
- (A) SOLID PACKOUT COLUMN ABOVE
- (B) SOLID PACKOUT COLUMN BELOW
- (AB) SOLID PACKOUT COLUMN ABOVE AND BELOW
- (1) HSS 4 x 4 x 1/4 BELOW
- (2) SIMPSON MIT HANGER
- (3) (2) LVL BLK'G w/ MIT HANGER EA. END

COLORADO REGISTERED
CONSOR KENT ANDERSON
35436
PROFESSIONAL ENGINEER
7-26-18

ANDERSON STRUCTURAL ENGINEERING, INC.
823 GRAND AVE.
SUITE 340
GLENWOOD SPGS, CO. 81601
(970) 984-0320

GREGG RESIDENCE

786 ASPEN BLUFF LANE - LOT 14 RED SKY RANCH
WOLCOTT, CO 81632
EAGLE COUNTY

ASE Project No.:1800-32
Drawn By: ADC
Checked By: LKA

Revision	Date
COORDINATION	7-6-18
PERMIT	7-26-18

UPPER LEVEL FRAMING PLAN

Sheet

S1.3

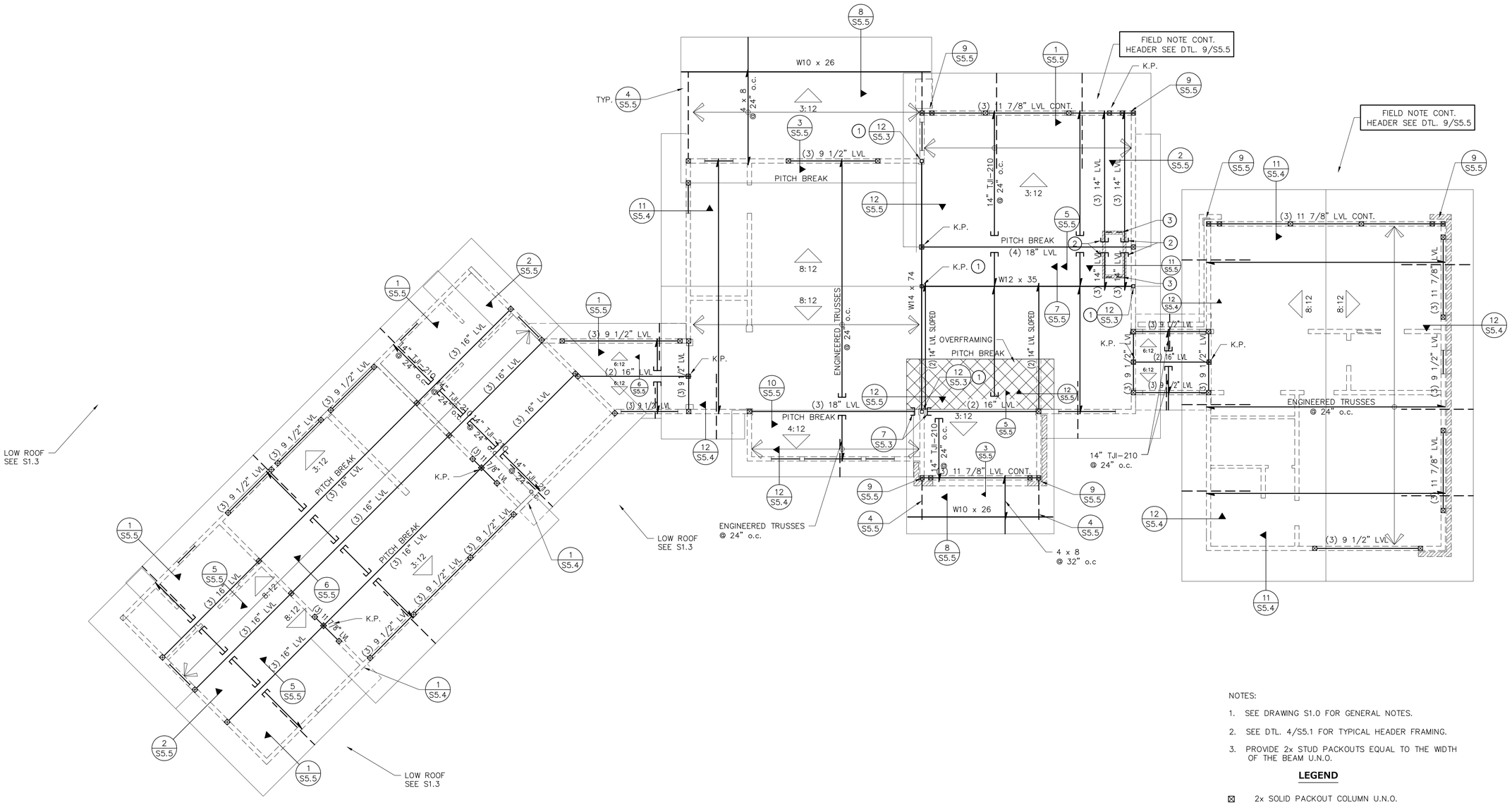

ROOF FRAMING PLAN

SCALE: 3/16" = 1'-0"

NOTES:

1. SEE DRAWING S1.0 FOR GENERAL NOTES.
2. SEE DTL. 4/S5.1 FOR TYPICAL HEADER FRAMING.
3. PROVIDE 2x STUD PACKOUTS EQUAL TO THE WIDTH OF THE BEAM U.N.O.

LEGEND

- ⊠ 2x SOLID PACKOUT COLUMN U.N.O.
- BEARING CONNECTION
- HANGING CONNECTION
- (1) HSS4 x 4 x 1/4
- (2) SIMPSON HU HANGER
- (3) (2) LVL BLK'G w/ SIMPSON MIT HANGER EA. END

COLORADO REGISTERED LARSON KENT ANDERSON 35436 PROFESSIONAL ENGINEER
7-26-18

ANDERSON STRUCTURAL ENGINEERING, INC.
823 GRAND AVE.
SUITE 340
GLENWOOD SPGS, CO. 81601
(970) 984-0320

GREGG RESIDENCE

786 ASPEN BLUFF LANE - LOT 14 RED SKY RANCH
WOLCOTT, CO 81632
EAGLE COUNTY

ASE Project No.: 1800-32
Drawn By: ADC
Checked By: LKA

Revision	Date
COORDINATION	7-6-18
PERMIT	7-26-18

ROOF FRAMING PLAN

Sheet

S1.4

NOTES:

1. SAWCUT CONTROL JOINTS SHALL BE MADE WITHIN 24 HOURS OF POUR.
2. CONTROL JOINTS SPACING SHALL NOT EXCEED 15'-0" IN EACH DIRECTION.

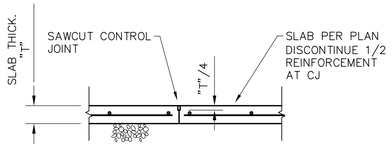

SECTION

1 TYPICAL SLAB CONTROL JOINTS

SCALE: 3/4" = 1'-0"

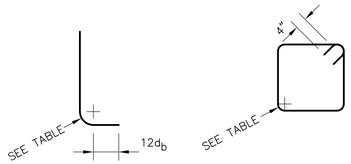

STD. 90° HOOKS STD. STIRRUPS & TIES

MINIMUM DIAMETERS OF BEND	
Bar Size	Minimum Diameter
No. 3 through 8	$6d_b$
No. 9, 10 and No. 11	$8d_b$
No. 14 and No. 18	$10d_b$

d_b= DIAMETER OF BAR

2 TYPICAL REINFORCEMENT DETAILS

SCALE: 3/4" = 1'-0"

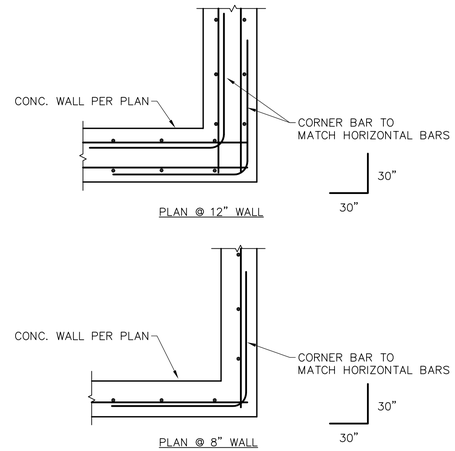

3 TYPICAL CORNER REINFORCEMENT

SCALE: 3/4" = 1'-0"

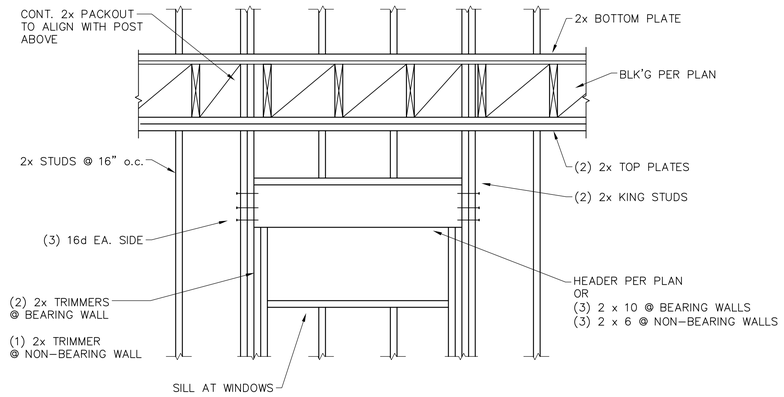

ELEVATION

4 TYPICAL HEADER FRAMING

SCALE: 3/4" = 1'-0"

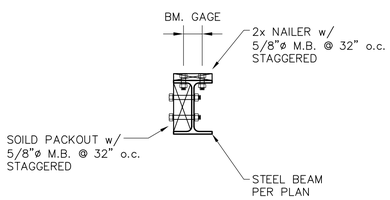

5 TYPICAL PACKOUTS & NAILERS

SCALE: 3/4" = 1'-0"

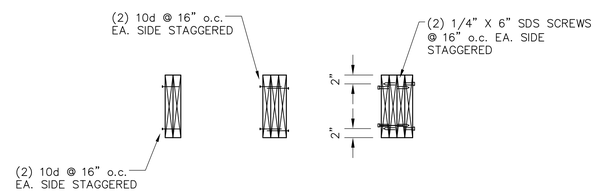

2-PLY BEAMS 3-PLY BEAMS 4-PLY BEAMS

6 MULTI PLY BEAM CONNECTIONS

SCALE: 3/4" = 1'-0"

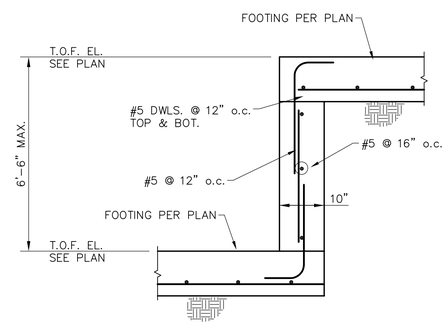

ELEVATION

7 TYPICAL FOOTING STEPS

SCALE: 3/4" = 1'-0"

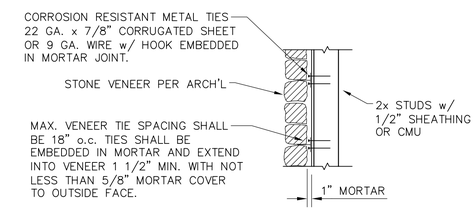

8 TYPICAL STONE VENEER ANCHORAGE

SCALE: N.T.S.

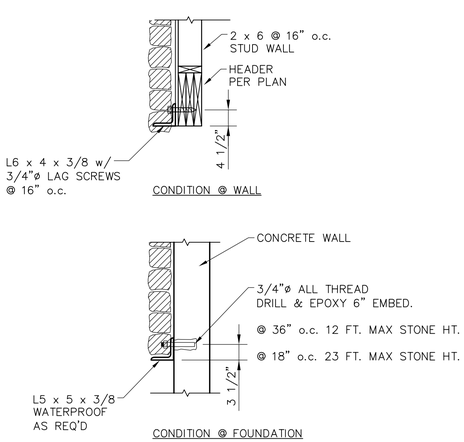

9 TYPICAL STONE LEDGER

SCALE: 3/4" = 1'-0"

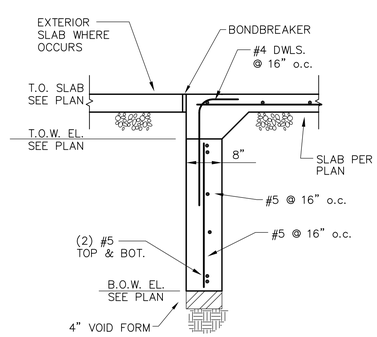

10 FOUNDATION DETAIL

SCALE: 3/4" = 1'-0"

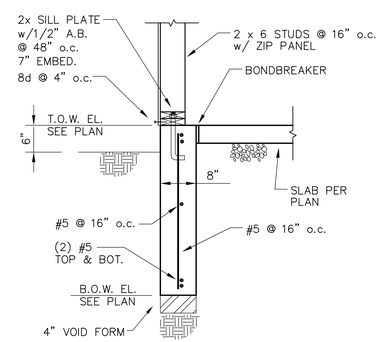

11 FOUNDATION DETAIL

SCALE: 3/4" = 1'-0"

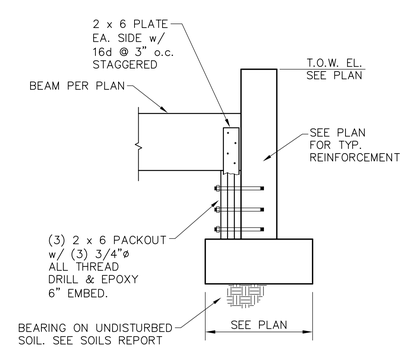

12 FOUNDATION DETAIL

SCALE: 3/4" = 1'-0"

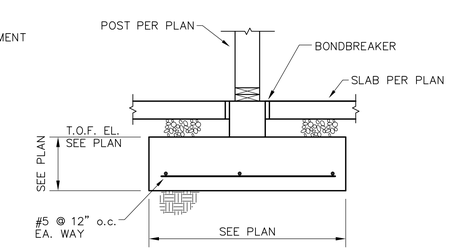

13 FOUNDATION DETAIL

SCALE: 3/4" = 1'-0"

ANDERSON STRUCTURAL ENGINEERING, INC.
823 GRAND AVE.
SUITE 340
GLENWOOD SPGS, CO. 81601
(970) 984-0320

GREGG RESIDENCE

786 ASPEN BLUFF LANE - LOT 14 RED SKY RANCH
WOLCOTT, CO 81632
EAGLE COUNTY

ASE Project No.:1800-32
Drawn By: ADC
Checked By: LKA

Revision	Date
COORDINATION	7-6-18
PERMIT	7-26-18

COLORADO REGISTERED PROFESSIONAL ENGINEER 35436 7-26-18

SECTIONS AND DETAILS

Sheet

S5.1

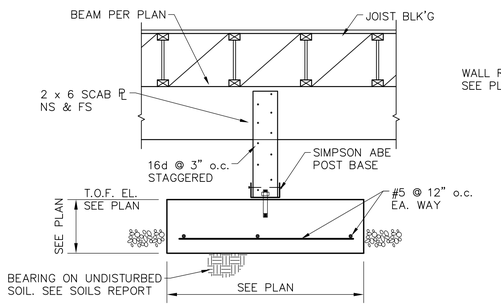

1 **FOUNDATION DETAIL**
SCALE: 3/4" = 1'-0"

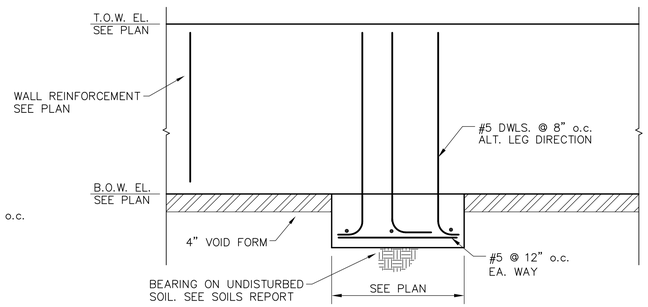

ELEVATION

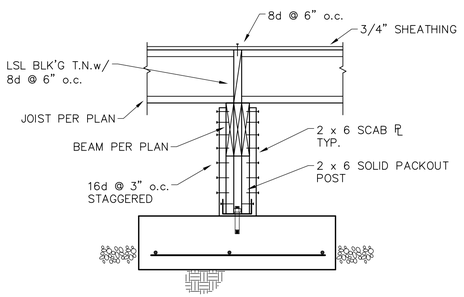

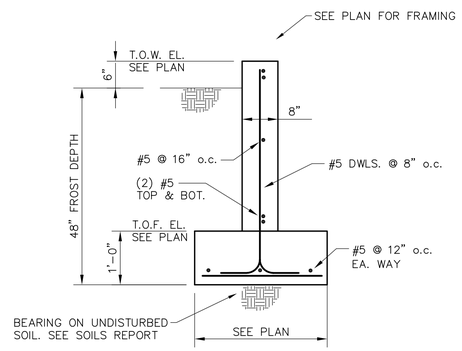

SECTION

2 **FOUNDATION DETAIL**
SCALE: 3/4" = 1'-0"

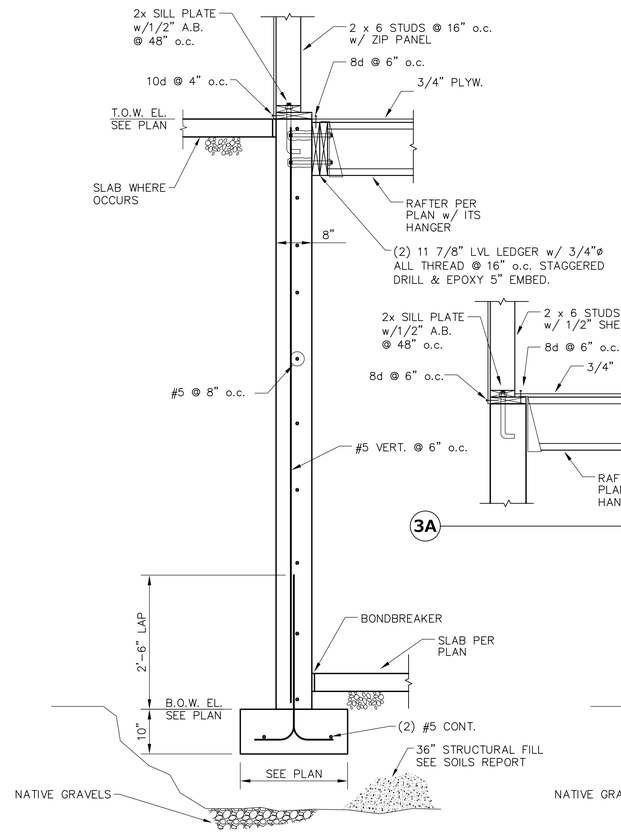

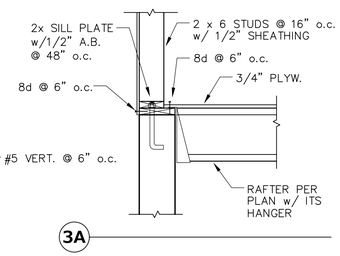

3 **FOUNDATION DETAIL**
SCALE: 3/4" = 1'-0"

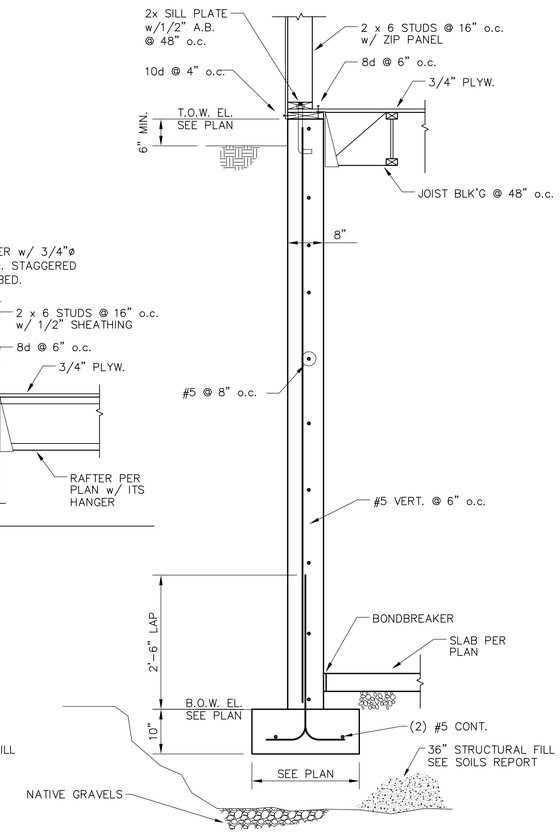

4 **FOUNDATION DETAIL**
SCALE: 3/4" = 1'-0"

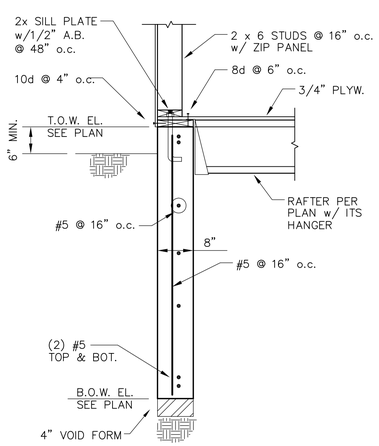

5 **FOUNDATION DETAIL**
SCALE: 3/4" = 1'-0"

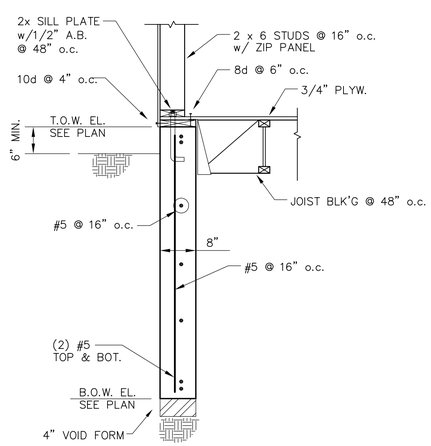

6 **FOUNDATION DETAIL**
SCALE: 3/4" = 1'-0"

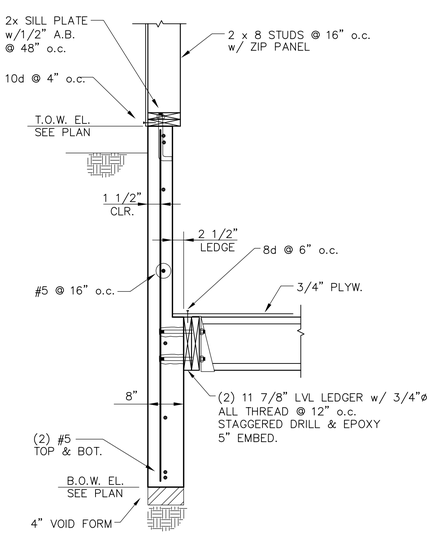

7 **FOUNDATION DETAIL**
SCALE: 3/4" = 1'-0"

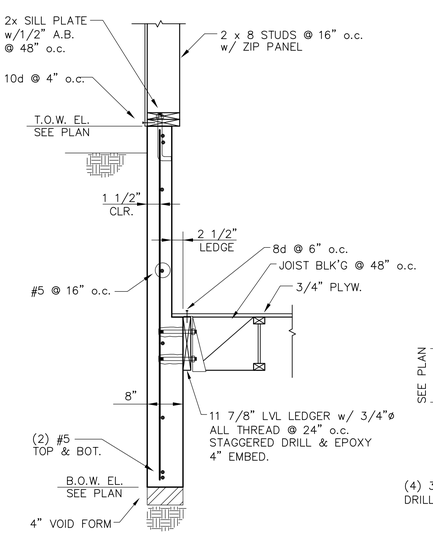

8 **FOUNDATION DETAIL**
SCALE: 3/4" = 1'-0"

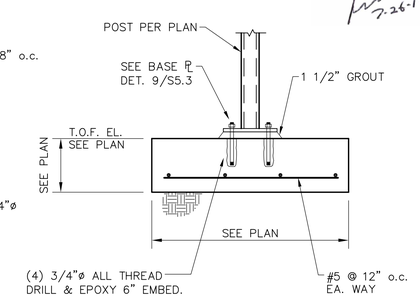

9 **FOUNDATION DETAIL**
SCALE: 3/4" = 1'-0"

COLORADO REGISTERED LANDON KENT ANDERSON 35436 PROFESSIONAL ENGINEER
7-26-18

ANDERSON STRUCTURAL ENGINEERING, INC.
823 GRAND AVE.
SUITE 340
GLENWOOD SPGS, CO. 81601
(970) 984-0320

GREGG RESIDENCE

786 ASPEN BLUFF LANE - LOT 14 RED SKY RANCH
WOLCOTT, CO 81632
EAGLE COUNTY

ASE Project No.:1800-32
Drawn By: ADC
Checked By: LKA

Revision	Date
COORDINATION	7-6-18
PERMIT	7-26-18

SECTIONS AND DETAILS

Sheet
S5.2

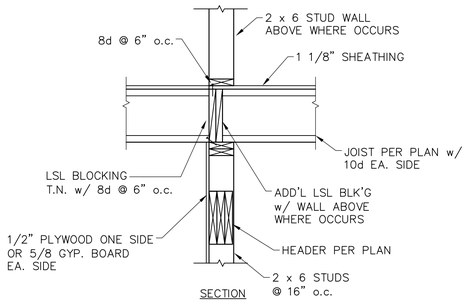

1 FLOOR FRAMING
SCALE: 3/4" = 1'-0"

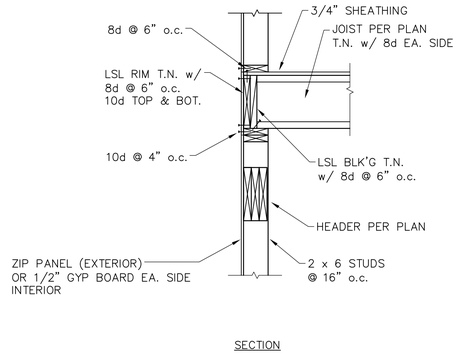

2 FLOOR FRAMING AT WALL
SCALE: 3/4" = 1'-0"

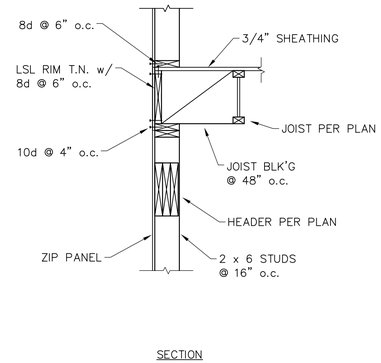

3 FLOOR FRAMING AT WALL
SCALE: 3/4" = 1'-0"

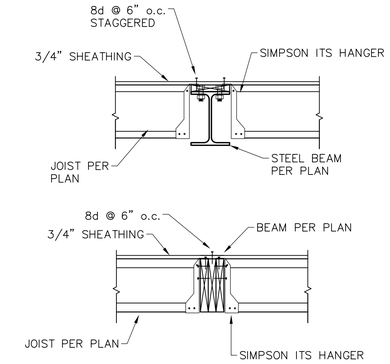

4 FLOOR FRAMING
SCALE: 3/4" = 1'-0"

5
SCALE: 3/4" = 1'-0"

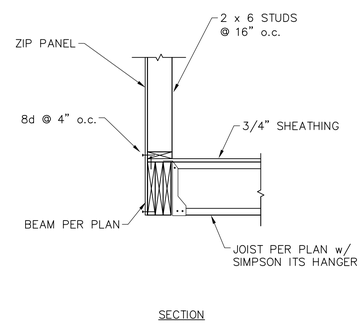

6 FLOOR FRAMING
SCALE: 3/4" = 1'-0"

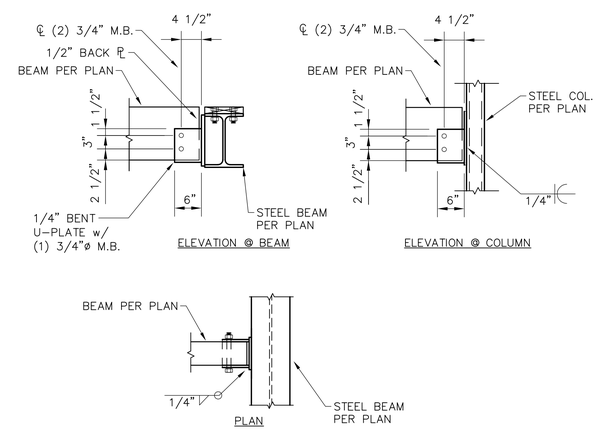

7 BEAM CONNECTION
SCALE: 3/4" = 1'-0"

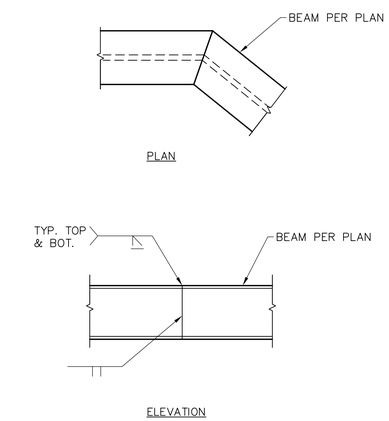

8 BEAM SPLICE DETAIL
SCALE: 3/4" = 1'-0"

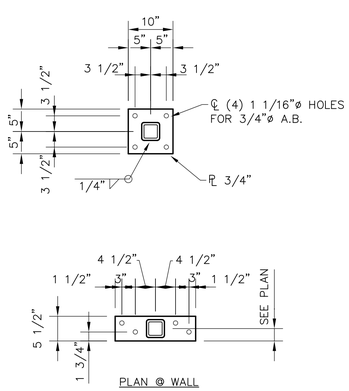

9 BASE PLATE DETAILS
SCALE: 3/4" = 1'-0"

BEAM CONNECTION SCHEDULE	
BEAM SIZE	ROWS OF BOLTS
W6, W8 & W10	2
W12, W14	3
W16, W18, W21, W24	4
W21, W24, W30	5

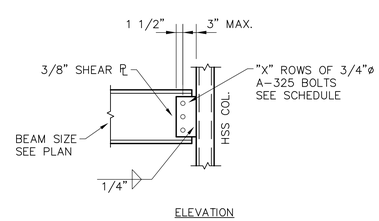

10 BEAM TO COLUMN CONNECTION
SCALE: 3/4" = 1'-0"

BEAM CONNECTION SCHEDULE	
BEAM SIZE	ROWS OF BOLTS
W6, W8 & W10	2
W12, W14	3
W16, W18, W21, W24	4
W21, W24, W30	5

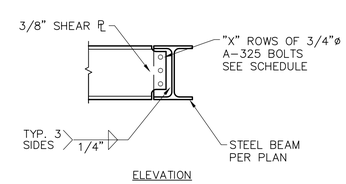

11 BEAM CONNECTION DETAIL
SCALE: 3/4" = 1'-0"

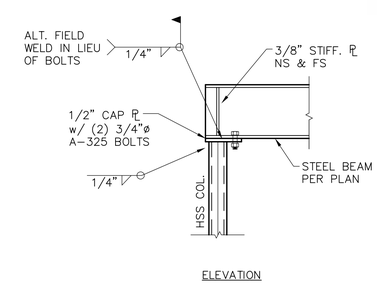

12 BEAM TO COLUMN CONNECTION
SCALE: 3/4" = 1'-0"

ANDERSON STRUCTURAL ENGINEERING, INC.
823 GRAND AVE.
SUITE 340
GLENWOOD SPGS, CO. 81601
(970) 984-0320

GREGG RESIDENCE

786 ASPEN BLUFF LANE - LOT 14 RED SKY RANCH
WOLCOTT, CO 81632
EAGLE COUNTY

ASE Project No.: 1800-32
Drawn By: ADC
Checked By: LKA

Revision	Date
COORDINATION	7-6-18
PERMIT	7-26-18

COLORADO REGISTERED LANDSCAPE ARCHITECT 35436 PROFESSIONAL ENGINEER 7-26-18

SECTIONS AND DETAILS

Sheet
S5.3

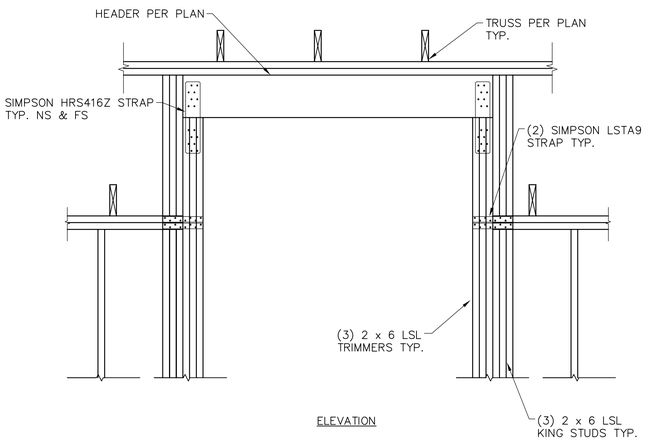

1 WALL FRAMING
SCALE: 3/4" = 1'-0"

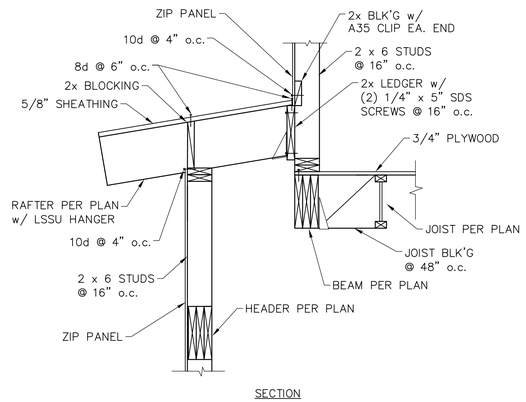

2 ROOF / FLOOR FRAMING
SCALE: 3/4" = 1'-0"

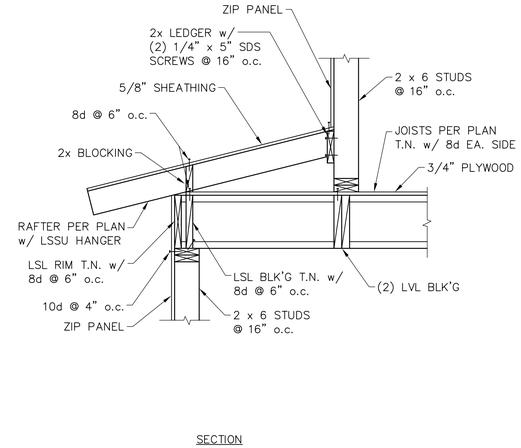

3 ROOF / FLOOR FRAMING
SCALE: 3/4" = 1'-0"

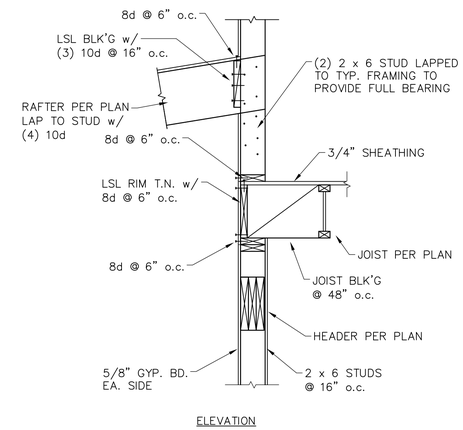

4 ROOF / FLOOR FRAMING
SCALE: 3/4" = 1'-0"

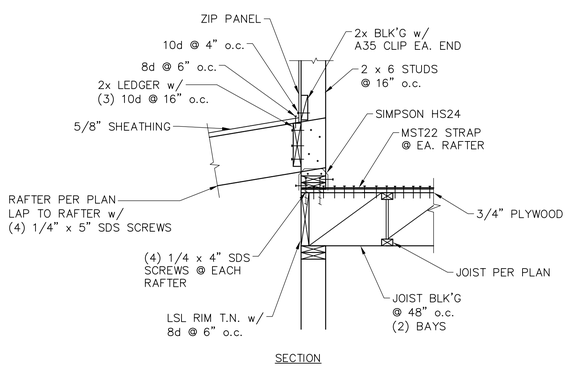

5 ROOF / FLOOR FRAMING
SCALE: 3/4" = 1'-0"

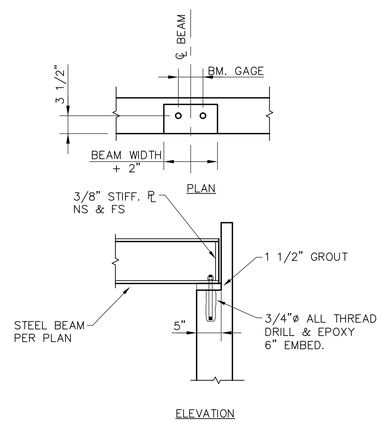

6 BEAM POCKET DETAIL
SCALE: 3/4" = 1'-0"

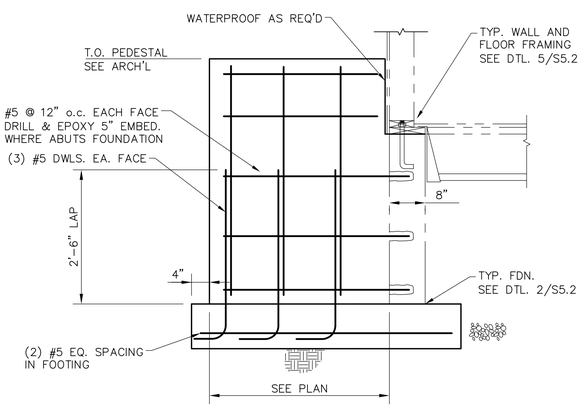

7 FOUNDATION DETAIL
SCALE: 3/4" = 1'-0"

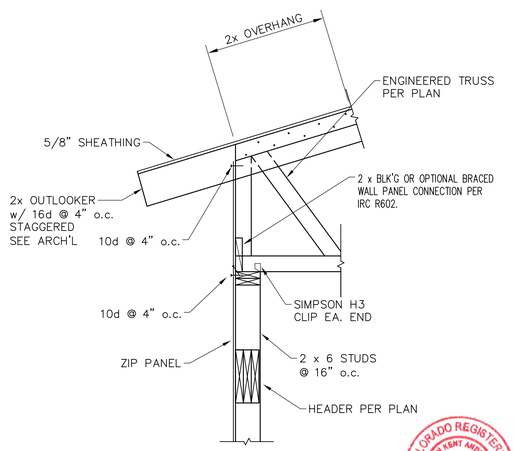

8 WALL FRAMING
SCALE: 3/4" = 1'-0"

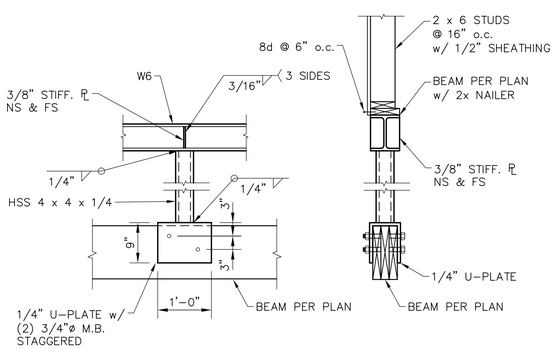

9 FIREPLACE FRAMING
SCALE: 3/4" = 1'-0"

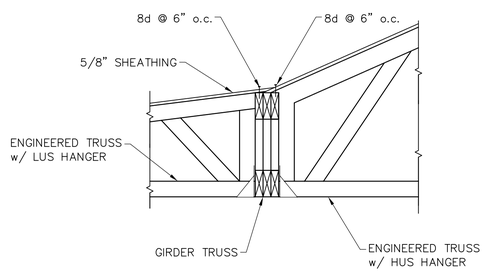

10 ROOF FRAMING
SCALE: 3/4" = 1'-0"

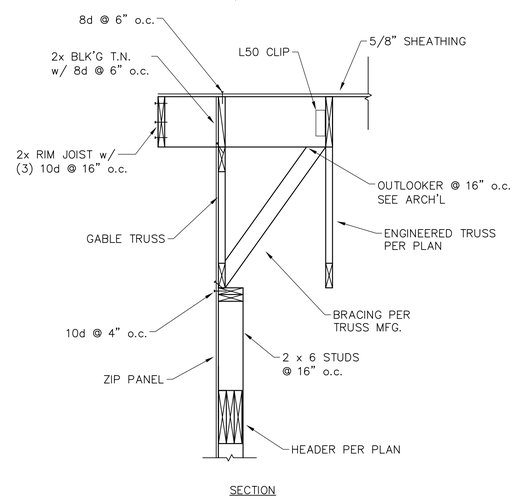

11 ROOF FRAMING
SCALE: 3/4" = 1'-0"

12 ROOF FRAMING
SCALE: 3/4" = 1'-0"

COLORADO REGISTERED CONSTRUCT ARCHITECTURE 35436 PROFESSIONAL ENGINEER
7-26-18

ANDERSON STRUCTURAL ENGINEERING, INC.
823 GRAND AVE.
SUITE 340
GLENWOOD SPGS, CO. 81601
(970) 984-0320

GREGG RESIDENCE

786 ASPEN BLUFF LANE - LOT 14 RED SKY RANCH
WOLCOTT, CO 81632
EAGLE COUNTY

ASE Project No.:1800-32
Drawn By: ADC
Checked By: LKA

Revision	Date
COORDINATION	7-6-18
PERMIT	7-26-18

SECTIONS AND DETAILS

Sheet
S5.4

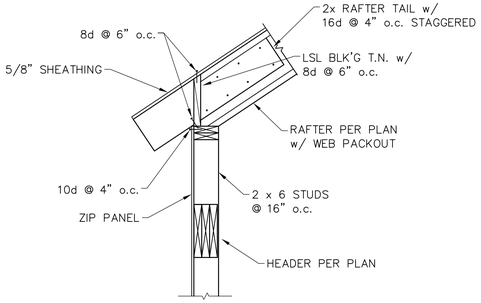

SECTION

1 ROOF FRAMING

SCALE: 3/4" = 1'-0"

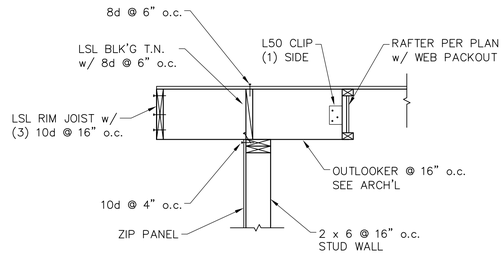

SECTION

2 ROOF FRAMING

SCALE: 3/4" = 1'-0"

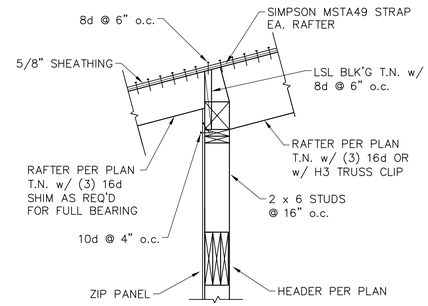

SECTION

3 ROOF FRAMING

SCALE: 3/4" = 1'-0"

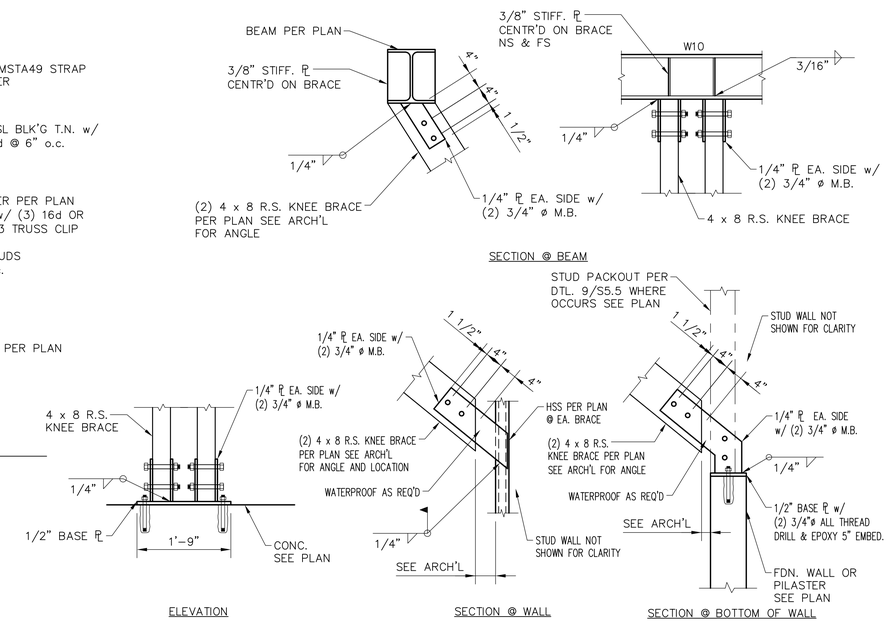

4 KNEE BRACE CONNECTION

SCALE: 3/4" = 1'-0"

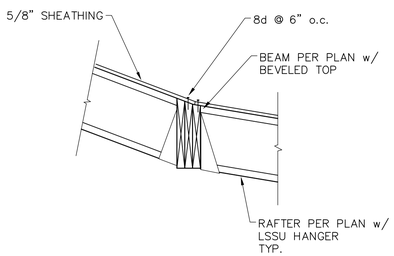

SECTION

5 ROOF FRAMING

SCALE: 3/4" = 1'-0"

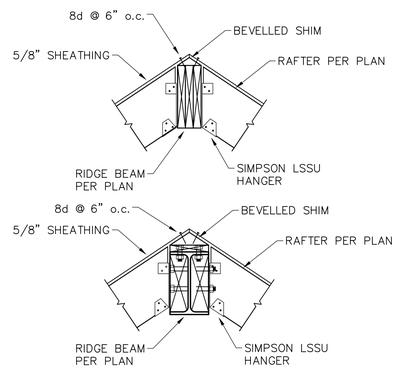

SECTION

NOTE: LSSU HANGERS MAY BE SUBSTITUTED AS FOLLOWS;

SPAN LESS THAN OR EQUAL TO 12'-0"
(2) SIMPSON LS50 CLIPS (1) EA. SIDE STAGGERED

SPAN LESS THAN OR EQUAL TO 7'-0"
(3) 10d T.N. EA. SIDE (6) TOTAL STAGGERED

6 VALLEY / RIDGE FRAMING

SCALE: 3/4" = 1'-0"

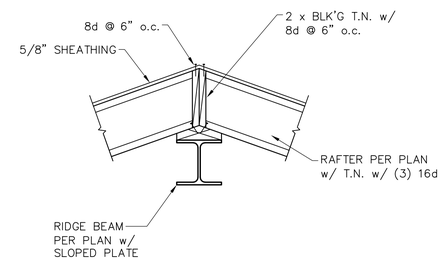

7 ROOF FRAMING

SCALE: 3/4" = 1'-0"

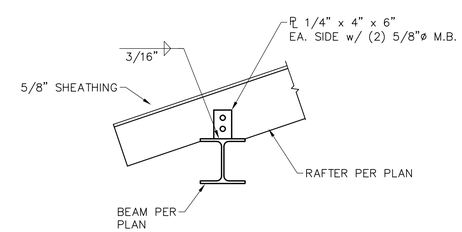

8 PORCH ROOF FRAMING

SCALE: 3/4" = 1'-0"

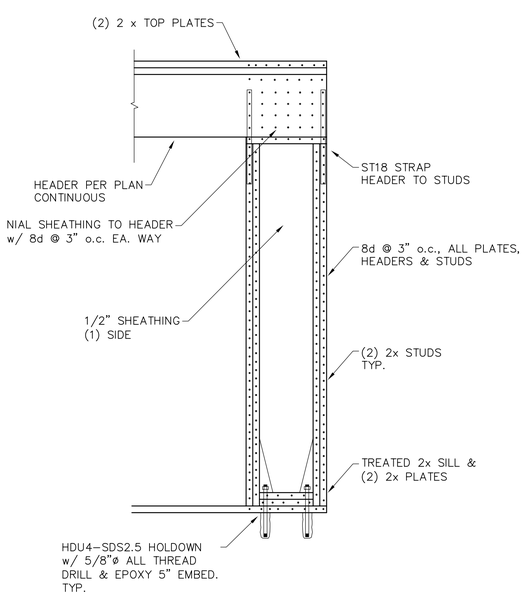

9 NARROW BRACED WALL PANEL

SCALE: 3/4" = 1'-0"

10

SCALE: 3/4" = 1'-0"

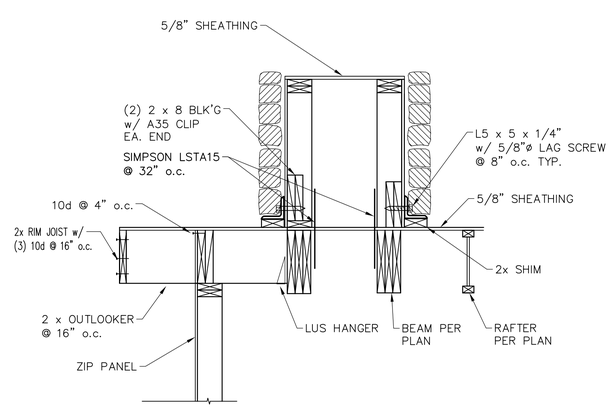

11 CHIMNEY DETAIL

SCALE: 3/4" = 1'-0"

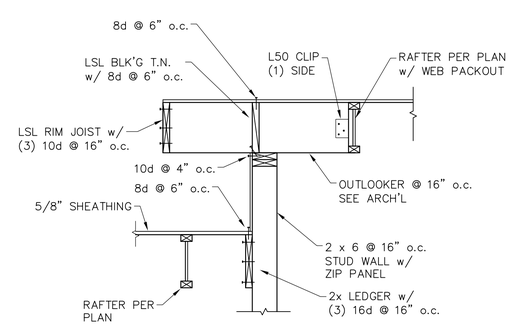

SECTION

12 ROOF FRAMING

SCALE: 3/4" = 1'-0"

COLORADO REGISTERED
LANDSCAPE ARCHITECT
35436
PROFESSIONAL ENGINEER
7-26-18

ANDERSON STRUCTURAL ENGINEERING, INC.
823 GRAND AVE.
SUITE 340
GLENWOOD SPGS, CO. 81601
(970) 984-0320

GREGG RESIDENCE

786 ASPEN BLUFF LANE - LOT 14 RED SKY RANCH
WOLCOTT, CO 81632
EAGLE COUNTY

ASE Project No.: 1800-32
Drawn By: ADC
Checked By: LKA

Revision	Date
COORDINATION	7-6-18
PERMIT	7-26-18

SECTIONS AND DETAILS

Sheet

S5.5

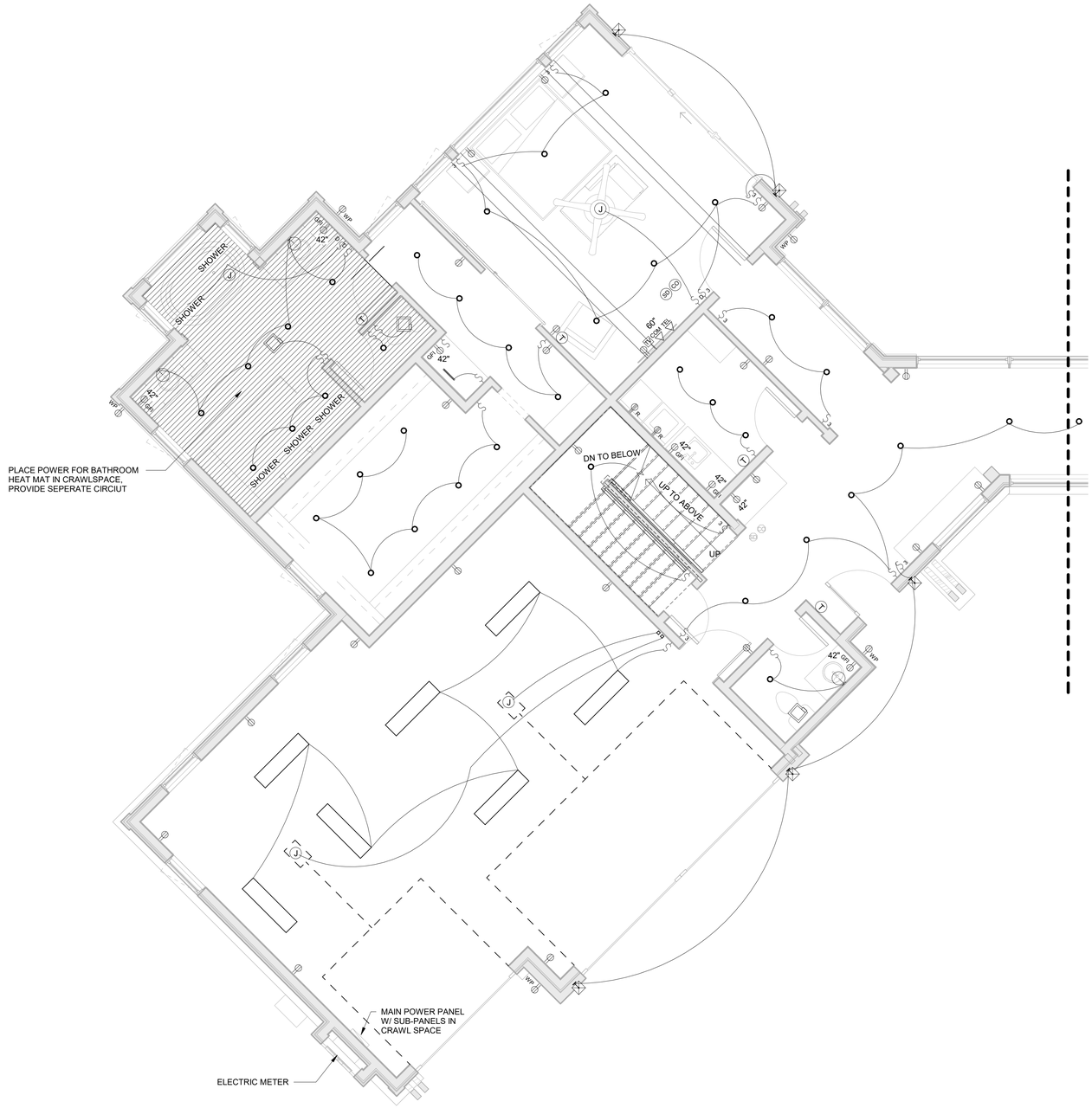

1 101-ELEC - MAIN LEVEL - NORTH
1/4" = 1'-0"

ELECTRICAL NOTES:

1. All work to be performed per current codes and regulations.
2. Electrical Contractor to verify proper wire and breaker sizes for equipment and lighting, per current codes and regulations and manufacture, prior to installation of wiring.
3. Electrical Contractor to coordinate with Architect, Interior Designer, and Owner at rough installation to review lights, switches, and receptacle locations for approval prior to wiring.
4. Electrical Contractor responsible for modifications to design and installation for meter, panel, and disconnect due to requirements by code.
5. Electrical Contractor to verify all sequencing with Architect, Interior Designer, and Owner.
6. Electrical Contractor responsible for hook-up of all electrical in cabinets.
7. Switches to be installed @ 48" < a.f.f., unless otherwise specified by Designer or Owner.
8. Receptacles -
   - Receptacles, Data, and Telephone to be installed at 10" < a.f.f., unless otherwise specified by Architect, Interior Designer, and Owner. Framer to installing blocking after location approval by Architect, Interior Designer, and Owner.
   - Receptacles above counters to be installed horizontally @ 42" unless otherwise specified by Architect, Interior Designer, and Owner.
   - Exterior receptacle to be on G.F.I. circuits in waterproof boxes with covers
9. Electrical device and plate cover installed in wood or stone to be dark brown unless otherwise specified. Electrical Contractor to review electrical device and plate cover surface colors with Architect, Interior Designer, and Owner prior to procurement and installation.
10. Electrical Contractor to review trim and baffle colors for recessed light fixtures with Architect, Interior Designer, and Owner. In general trim and baffles in wood ceiling to be black, in white or beige ceilings install white, and all other ceilings trim and baffles to be painted to match adjacent finish.
11. Following areas to be on a Lutron "Grafik Eye" system. Switches sequencing to be programmed per the Owner.
    - All Main Level
12. Heat tape to be installed continuous full length in all gutters, downspouts, and leaders. J-box to be installed at all downspout locations, 24" above finished grade.
13. Television antenna to be home runs to television antenna "main" outlet, location to be determined by Owner.
14. Smoke and CO detectors to be installed per current requirements of building code and authorities having jurisdiction - contractor to verify and secure necessary inspections/approvals.

WHISPER BATH EXHAUST FAN
PENDANT FIXTURE
1x4 SURFACE MOUNTED FLOURESCENT LIGHT FIXTURE
LED UNDER-CABINET STRIP LIGHT
SMOKE/CARBIN MONOXIDE DETECTOR
FAN/LIGHT JUNCTION BOX
6" LED RECESSED LIGHT FIXTURE
WALL SCONCE
3-WAY SWITCH
SINGLE POLE SWITCH
THERMOSTAT
LED WALL MOUNTED CLOSET LIGHT
TELEPHONE JACK
DATA JACK
TELEVISION JACK
DUPLEX OUTLET
GFI OUTLET
SPECIAL APPLIANCE OUTLET
WATERPROOF OUTLET
DUPLEX FLOOR OUTLET

ELECTRICAL LEGEND
1/4" = 1'-0"

NUTKINS DESIGN GROUP

STATE OF COLORADO
WILLIAM E. NUTKINS JR.
403359
SEAL
LICENSED ARCHITECT

Gregg Residence
786 Aspen Bluff Lane - Lot 14 Red Sky Ranch
Wolcott, Colorado

Job #
2013-006

Issue Date
Permit - 07/27/2018
DRB Final - 06/07/2018

MAIN LEVEL ELECTRICAL - NORTH

Revision	No.	Date

E101

7/27/2018 1:50:53 PM D:\NDG\Gregg\Gregg - MainCurrent 7-27.rvt

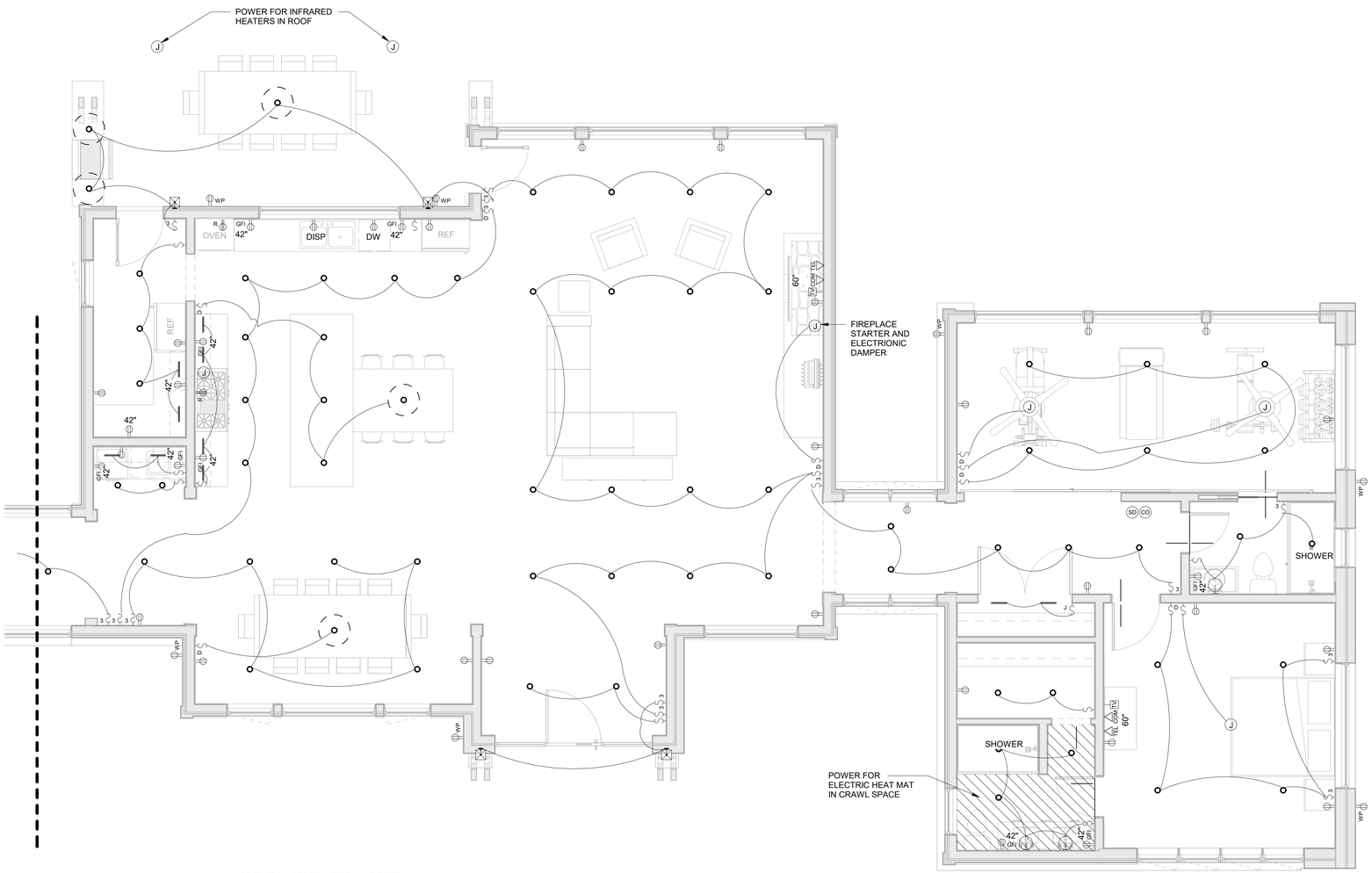

1 102-ELEC - MAIN LEVEL - SOUTH
1/4" = 1'-0"

ELECTRICAL NOTES:

1. All work to be performed per current codes and regulations.
2. Electrical Contractor to verify proper wire and breaker sizes for equipment and lighting, per current codes and regulations and manufacture, prior to installation of wiring.
3. Electrical Contractor to coordinate with Architect, Interior Designer, and Owner at rough installation to review lights, switches, and receptacle locations for approval prior to wiring.
4. Electrical Contractor responsible for modifications to design and installation for meter, panel, and disconnect due to requirements by code.
5. Electrical Contractor to verify all sequencing with Architect, Interior Designer, and Owner.
6. Electrical Contractor responsible for hook-up of all electrical in cabinets.
7. Switches to be installed @ 48" < a.f.f., unless otherwise specified by Designer or Owner.
8. Receptacles -
   - Receptacles, Data, and Telephone to be installed at 10" < a.f.f., unless otherwise specified by Architect, Interior Designer, and Owner. Framer to installing blocking after location approval by Architect, Interior Designer, and Owner.
   - Receptacles above counters to be installed horizontally @ 42" unless otherwise specified by Architect, Interior Designer, and Owner.
   - Exterior receptacle to be on G.F.I. circuits in waterproof boxes with covers
9. Electrical device and plate cover installed in wood or stone to be dark brown unless otherwise specified. Electrical Contractor to review electrical device and plate cover surface colors with Architect, Interior Designer, and Owner prior to procurement and installation.
10. Electrical Contractor to review trim and baffle colors for recessed light fixtures with Architect, Interior Designer, and Owner. In general trim and baffles in wood ceiling to be black, in white or beige ceilings install white, and all other ceilings trim and baffles to be painted to match adjacent finish.
11. Following areas to be on a Lutron "Grafik Eye" system. Switches sequencing to be programmed per the Owner.
    - All Main Level
12. Heat tape to be installed continuous full length in all gutters, downspouts, and leaders. J-box to be installed at all downspout locations, 24" above finished grade.
13. Television antenna to be home runs to television antenna "main" outlet, location to be determined by Owner.
14. Smoke and CO detectors to be installed per current requirements of building code and authorities having jurisdiction - contractor to verify and secure necessary inspections/approvals.

WHISPER BATH EXHAUST FAN	THERMOSTAT
PENDANT FIXTURE	LED WALL MOUNTED CLOSET LIGHT
1x4 SURFACE MOUNTED FLOURESCENT LIGHT FIXTURE	TELEPHONE JACK
LED UNDER-CABINET STRIP LIGHT	DATA JACK
SMOKE/CARBIN MONOXIDE DETECTOR	TELEVISION JACK
FAN/LIGHT JUNCTION BOX	DUPLEX OUTLET
6" LED RECESSED LIGHT FIXTURE	GFI OUTLET
WALL SCONCE	SPECIAL APPLIANCE OUTLET
3-WAY SWITCH	WATERPROOF OUTLET
SINGLE POLE SWITCH	DUPLEX FLOOR OUTLET

ELECTRICAL LEGEND
1/4" = 1'-0"

7/27/2018 1:50:56 PM D:\NDG\Gregg\Gregg - MainCurrent 7-27.rvt

NDG NUTKINS DESIGN GROUP

STATE OF COLORADO
WILLIAM E. NUTKINS JR.
403359
SEAL
LICENSED ARCHITECT

Gregg Residence
786 Aspen Bluff Lane - Lot 14 Red Sky Ranch
Wolcott, Colorado

Job #
2013-006

Issue Date
Permit - 07/27/2018
DRB Final - 06/07/2018

MAIN LEVEL ELECTRICAL - SOUTH

Revision	No.	Date

E102

1 UPPER LEVEL
1/4" = 1'-0"

ELECTRICAL NOTES:

1. All work to be performed per current codes and regulations.
2. Electrical Contractor to verify proper wire and breaker sizes for equipment and lighting, per current codes and regulations and manufacture, prior to installation of wiring.
3. Electrical Contractor to coordinate with Architect, Interior Designer, and Owner at rough installation to review lights, switches, and receptacle locations for approval prior to wiring.
4. Electrical Contractor responsible for modifications to design and installation for meter, panel, and disconnect due to requirements by code.
5. Electrical Contractor to verify all sequencing with Architect, Interior Designer, and Owner.
6. Electrical Contractor responsible for hook-up of all electrical in cabinets.
7. Switches to be installed @ 48" < a.f.f., unless otherwise specified by Designer or Owner.
8. Receptacles -
   - Receptacles, Data, and Telephone to be installed at 10" < a.f.f., unless otherwise specified by Architect, Interior Designer, and Owner. Framer to installing blocking after location approval by Architect, Interior Designer, and Owner.
   - Receptacles above counters to be installed horizontally @ 42" unless otherwise specified by Architect, Interior Designer, and Owner.
   - Exterior receptacle to be on G.F.I. circuits in waterproof boxes with covers
9. Electrical device and plate cover installed in wood or stone to be dark brown unless otherwise specified. Electrical Contractor to review electrical device and plate cover surface colors with Architect, Interior Designer, and Owner prior to procurement and installation.
10. Electrical Contractor to review trim and baffle colors for recessed light fixtures with Architect, Interior Designer, and Owner. In general trim and baffles in wood ceiling to be black, in white or beige ceilings install white, and all other ceilings trim and baffles to be painted to match adjacent finish.
11. Following areas to be on a Lutron "Grafik Eye" system. Switches sequencing to be programmed per the Owner.
    - All Main Level
12. Heat tape to be installed continuous full length in all gutters, downspouts, and leaders. J-box to be installed at all downspout locations, 24" above finished grade.
13. Television antenna to be home runs to television antenna "main" outlet, location to be determined by Owner.
14. Smoke and CO detectors to be installed per current requirements of building code and authorities having jurisdiction - contractor to verify and secure necessary inspections/approvals.

WHISPER BATH EXHAUST FAN	THERMOSTAT
PENDANT FIXTURE	LED WALL MOUNTED CLOSET LIGHT
1x4 SURFACE MOUNTED FLOURESCENT LIGHT FIXTURE	TELEPHONE JACK
LED UNDER-CABINET STRIP LIGHT	DATA JACK
SMOKE/CARBIN MONOXIDE DETECTOR	TELEVISION JACK
FAN/LIGHT JUNCTION BOX	DUPLEX OUTLET
6" LED RECESSED LIGHT FIXTURE	GFI OUTLET
WALL SCONCE	SPECIAL APPLIANCE OUTLET
3-WAY SWITCH	WATERPROOF OUTLET
SINGLE POLE SWITCH	DUPLEX FLOOR OUTLET

ELECTRICAL LEGEND
1/4" = 1'-0"

NUTKINS DESIGN GROUP

STATE OF COLORADO
WILLIAM E. NUTKINS JR.
403359
SEAL
LICENSED ARCHITECT

Gregg Residence

786 Aspen Bluff Lane - Lot 14 Red Sky Ranch
Wolcott, Colorado

Job #
2013-006

Issue Date
Permit - 07/27/2018
DRB Final - 06/07/2018

UPPER LEVEL ELECTRICAL

Revision	No.	Date

E103

7/27/2018 1:51:04 PM D:\NDG\Gregg\Gregg - MainCurrent 7-27.rvt

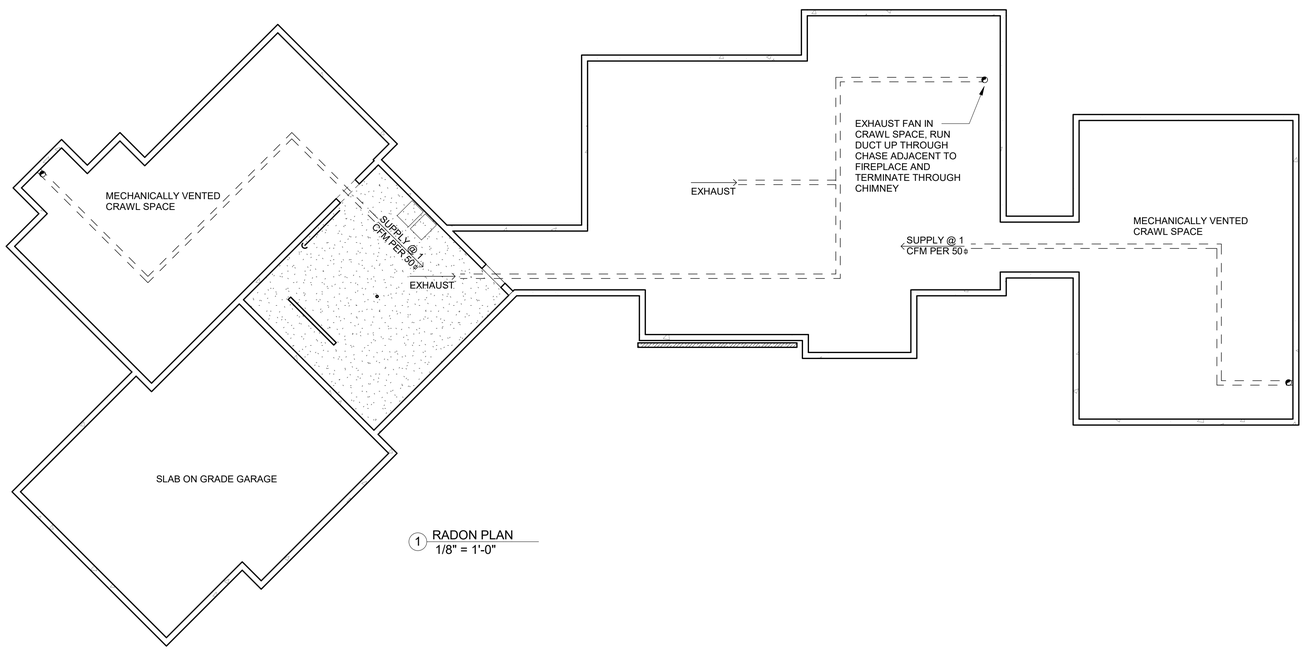

1 RADON PLAN
1/8" = 1'-0"

7/27/2018 1:51:08 PM D:\NDG\Gregg\Gregg - MainCurrent 7-27.rvt

NUTKINS DESIGN GROUP

STATE OF COLORADO
WILLIAM E. NUTKINS JR.
403359
SEAL
LICENSED ARCHITECT

Gregg Residence

786 Aspen Bluff Lane - Lot 14 Red Sky Ranch
Wolcott, Colorado

Job #
2013-006

Issue Date
Permit - 07/27/2018
DRB Final - 06/07/2018

RADON PLAN

Revision	No.	Date

RADON