414 29th Avenue
Oakland, CA 94601

MIXED-USE BUILDING

GROSS FLOOR AREAS		
First Floor		
Garage / Mechanical	5,403.7	sf
Common Stairs & Corridors	312.0	sf
Lobby	237.6	sf
Elevator	76.1	sf
Total Gross Floor Area	**6,029.4**	**sf**
Common Balconies / Decks	-	sf
Second Floor		
Stair 1	242.3	sf
Stair 2	313.9	sf
Elevator	75.8	sf
Mechanical / Chases	14.8	sf
Units	3,774.5	sf
Total Gross Floor Area	**4,421.3**	**sf**
Common Balconies / Decks	948.1	sf
Third Floor		
Stair 1	132.1	sf
Stair 2	125.5	sf
Elevator	75.8	sf
Mechanical / Chases	64.8	sf
Units	4,130.5	sf
Total Gross Floor Area	**4,528.8**	**sf**
Common Balconies / Decks	-	sf
Fouth Floor		
Stair 1	133.0	sf
Stair 2	171.9	sf
Elevator	75.8	sf
Mechanical / Chases	16.5	sf
Units	3,938.2	sf
Total Gross Floor Area	**4,337.3**	**sf**
Common Walkway	528.0	sf
Fifth Floor		
Stair 1	-	sf
Stair 2	139.3	sf
Elevator	75.8	sf
Mechanical / Chases	28.4	sf
Units	3,841.7	sf
Total Gross Floor Area	**4,085.2**	**sf**
Common Balconies / Decks	-	sf

UNIT AREAS		
UNIT 1		
First Floor	405.64	sf
Second Floor	484.74	sf
Total Gross Floor Area	**890.38**	**sf**
Balcony / Deck	73.82	sf
UNIT 2		
First Floor	530.86	sf
Second Floor	539.29	sf
Total Gross Floor Area	**1070.16**	**sf**
Balcony / Deck	88.46	sf
UNIT 3		
First Floor	700.73	sf
Second Floor	652.41	sf
Total Gross Floor Area	**1353.14**	**sf**
Balcony / Deck	52.50	sf
UNIT 4		
First Floor	592.40	sf
Second Floor	692.71	sf
Total Gross Floor Area	**1285.11**	**sf**
Balcony / Deck	52.50	sf
UNIT 5		
First Floor	438.58	sf
Second Floor	535.37	sf
Total Gross Floor Area	**973.95**	**sf**
Balcony / Deck	0.00	sf
UNIT 6		
First Floor	503.50	sf
Second Floor	462.74	sf
Total Gross Floor Area	**966.24**	**sf**
Balcony / Deck	42.51	sf
UNIT 7		
First Floor	602.83	sf
Second Floor	763.27	sf
Total Gross Floor Area	**1366.10**	**sf**
Balcony / Deck	50.23	sf
UNIT 8		
First Floor	481.35	sf
Second Floor	524.52	sf
Total Gross Floor Area	**1005.87**	**sf**
Balcony / Deck	55.56	sf
UNIT 9		
First Floor	530.89	sf
Second Floor	498.29	sf
Total Gross Floor Area	**1029.18**	**sf**
Balcony / Deck	133.57	sf
UNIT 10		
First Floor	627.23	sf
Second Floor	631.40	sf
Total Gross Floor Area	**1258.63**	**sf**
Balcony / Deck	105.00	sf
UNIT 11		
First Floor	669.07	sf
Second Floor	671.71	sf
Total Gross Floor Area	**1340.78**	**sf**
Balcony / Deck	105.00	sf
UNIT 12		
First Floor	535.49	sf
Second Floor	512.71	sf
Total Gross Floor Area	**1048.20**	**sf**
Balcony / Deck	56.04	sf
UNIT 13		
First Floor	505.13	sf
Second Floor	329.73	sf
Total Gross Floor Area	**834.86**	**sf**
Balcony / Deck	154.76	sf
UNIT 14		
First Floor	589.05	sf
Second Floor	673.30	sf
Total Gross Floor Area	**1262.35**	**sf**
Balcony / Deck	176.53	sf

SPECIAL INSPECTION
CONC
REIN STEEL
MASONRY
SHOTCRETE
GRADING
SEISMIC RESIST

- SEPARATE ENCROACHMENT PERMIT MUST BE OBTAINED FOR BUILDING ACROSS PUBLIC PROPERTY

- SEPARATE P-JOB REQUIRED

PROJECT TEAM

APPLICANT:
Owner Name: 29th Avenue Group, LLC
Owner Address: 1211 Embarcadero Way, Suite D
Oakland, CA 94601
Owner Contact: Carlos Plazola
Owner Phone #: 510-207-7238
DESIGN FIRM:
TECHNE
3956 30th Street, San Diego, CA 92104
Contact: Abhay Schweitzer
Phone #: 619-940-5814, email: abhay@techne-us.com
ARCHITECT OF RECORD:
Michael R. Morton AIA
Phone #: 619-857-8144
STRUCTURAL ENGINEER:
Santos and Urrutia
2451 Harrison St
San Francisco, CA 94110
Contact: Mile Chan
Phone #: 415-642-7722, email: mchan@santosurrutia.com
MEP ENGINEER:
ACIES ENGINEERING
111 W. Evelyn Avenue Suite 301
Sunnyvale, CA 94086
Contact: Alex Petrovic
Phone #: , email:
CIVIL ENGINEER:
Lea & Braze Engineering, Inc.
2495 Industrial Parkway West
Hayward, CA 94545
Contact: Peter Carlino, P.E., Principal
Phone #: 510-887-4086 x 117 Email: PCarlino@leabraze.com
GEOTECHNICAL ENGINEER:
Earth Mechanics Consulting
Contact: Allen Gruen
Phone #: 510-839-0765, email: earthmech1@aol.com
SURVEYOR:
True North Surveying, Inc.
1345 8th Street
Berkeley, CA 94710
Contact: Donna Marie de Souza
Phone #: 510-849-3676
NOISE / ACOUSTICAL ENGINEER:
Krause Engineering Services
Contact: Nick Krause
Phone #: 510-685-9987, email: nickkrause@comcast.net

SCOPE OF WORK

This project consists of :
- Construction of new Mixed-Used building
- Right of way improvements (sidewalk, curb and gutter, driveway)

APPLICABLE CODES

- Oakland Planning Code
- 2013 California Building Code
- 2013 California Residential Code
- 2013 California Plumbing Code
- 2013 California Electrical Code
- 2013 California Plumbing Code

VICINITY MAP

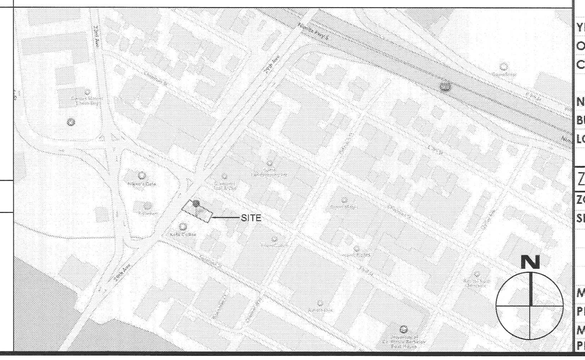

PROJECT INFORMATION

414 29th Ave.

PROJECT ADDRESS:	414 29th Ave Oakland, CA 94601
ASSESSORS PARCEL NUMBER:	025-0676-011
LEGAL DESCRIPTION:	LOTS 13 & 14, BLOCK 18, MAP OF THE NORTH ALAMEDA TRACT FORMERLY KNOWN AS THE VALDEZ AND GLASCOCK TRACT (51 M. 19) CITY OF OAKLAND, ALAMEDA COUNTY.
YEAR BUILT:	NEW CONSTRUCTION
OCCUPANCY TYPE:	R-2 (Live/~~Work~~ Unitss) & S-2 (Parking Garage)
CONSTRUCTION TYPE:	IA - ~~2 HOUR RATED~~, SPRINKLERED (1st Floor) VA - 1 HOUR RATED, SPRINKLERED (2-5th Floors)
NUMBER OF STORIES:	5
BUILDING HEIGHT:	54' - 4 1/6"
LOT AREA:	6,240.3 S.F. 0.14 ACRES

ZONING INFORMATION

414 29th Ave.

ZONING DESIGNATION:		HBX-3	
SETBACKS (yards):			
	FRONT:	0'-0"	
	SIDE:	0'-0"	
	REAR:	6'-0" *(from 2nd through 4th floor)*	10'-0" *(for 5th floor)*
MAXIMUM HEIGHT:		55'-0"	
PROPOSED HEIGHT:		54' - 4 1/6"	
MAXIMUM FAR:		3.4	*21,217.1* sf
PROPOSED FAR:		2.9	*17,998.3* sf

FIELD COPY

TECHNE
DESIGN | DEVELOPMENT
3956 30th Street, San Diego, CA 92104
techne-us.com sustainablearchitect.org
o 619-940-5814 m 313-595-5814

CONSULTANTS

4/9/2015
LICENSED ARCHITECT
MICHAEL RENE MORTON
C-19371
REN. 04/30/2015
STATE OF CALIFORNIA

414 29th Avenue
Oakland, CA 94601

OWNER

29th Avenue Group, LLC
1211 Embarcadero Way, Suite D
Oakland, CA 94606

BuildZig
Dream it. Build it. Zig it.

MARK	DATE	DESCRIPTION
01	11.10.14	1st Building Permit Submittal
02	02.23.15	2nd Building Permit Submittal
03	03.13.15	3rd Building Permit Submittal
04	04.02.15	Elevator Revision

4/1/2015 4:55:12 PM

PROJECT NO: 1410
CAD DWG FILE: G001 COVER SHEET.DWG
DRAWN BY: A.S, M.M., J.C., J.S.
CHK'D BY: A.S., M.M

COPYRIGHT: TECHNE expressly reserves its common law copyright and other property rights in this document. This document shall not be reproduced, copied, changed or disclosed in any form or manner whatsoever without first obtaining the express written consent of TECHNE

SHEET TITLE
COVER SHEET

G001

SHEET OF 100

ABBREVIATIONS

@	At (the rate of)
&	And
"	Inch; Ditto (which means "same as above")
#	Number, or Pound
Ø	Diameter, Round, Phase
AB:	Anchor Bolt; Asbestos Board
ABV:	Above
AC:	Air Conditioning, Alternating Current
ACC:	Access
ACI:	American Concrete Institute
ACOUST:	Acoustical
ACR:	Acrylic
ACST:	Acoustic
AD:	Access Door, Area Drain
ADA:	Americans with Disabilities Act of 1992
ADD:	Addendum; Addition
ADDL:	Additional
ADH:	Adhesive
ADJ:	Adjust, Adjustable, Adjacent
AF:	Above the Floor
AFF:	Above Finished Floor
AGG:	Aggregate
AGGR:	Aggregate
AIA:	American Institute of Architects
AISC:	American Institute of Steel Construction
AL:	Aluminum
ALM:	Alarm
ALT:	Alternate, Alteration; Altitude
ALUM:	Aluminum
AMB:	Ambient
AMP:	Ampere, Ampacity
AMT:	Amount
ANCH:	Anchor, Anchorage
ANOD:	Anodized
APPD:	Approved
APPROX:	Approximate
APRVD:	Approved
APT:	Apartment
APX:	Approximate
ARCH:	Architect, Architectural
AS:	Acoustic Sealant
ASB:	Asbestos
ASME:	American Society of Mechanical Engineers
ASPH:	Asphalt
ASSEM:	Assemble
ASSOC:	Association; Associate
ASSY:	Assembly
ASTM:	American Society for Testing and Materials
AUTH:	Authorized
AUTO:	Automatic
AVG:	Average
AWG:	American Wire Gauge
AWS:	American Welding Society
AX:	Axis
B TO B:	Back to Back
B/:	Bottom (of)
BAL:	Balance, Ballast
BAF:	Baffle
BDY:	Boundary
BDRM:	Bedroom
BEL:	Below
BET:	Between
BETW:	Between
BEV:	Bevel
BIT:	Bituminous
BJF:	Bituminous Joint Filler
BKR:	Breaker
BL:	Base Line, Building Line, Block
BLDG:	Building
BLK:	Block
BLKG:	Blocking
BLR:	Boiler
BLT-IN:	Built-In
BM:	Beam, Bench Mark
BN:	Bullnose
BNT:	Bent
BO:	Blow Off
BOT:	Bottom
BP:	Base Plate, Blueprint, Bypass
BPL:	Bearing Plate
BR:	Bedroom, Brick, Brass
BRDG:	Bridge, Bridging
BRG:	Bearing
BRK:	Brick
BRKR:	Breaker
BRKT:	Bracket
BRZ:	Bronze
BRZG:	Brazing
BSMT:	Basement
BT:	Bathtub, Bolt
BTR:	Better
BTU:	British Thermal Units
BTUH:	British Thermal Units per Hour
BUR:	Built-up Roof
BUZ:	Buzzer
BVL:	Beveled
BW:	Both Ways
BYP:	By Pass
C/C:	Center to Center
C TO C:	Center to Center
CA:	Compressed Air
CAB:	Cabinet
CAD:	Computer-Aided Drafting
CAS:	Caisson
CAP:	Capacity
CAR:	Carpet
CARP:	Carpenter
CAT:	Catalog
CAV:	Cavity
CB:	Catch Basin, Concrete Block
CBL:	Concrete Block
CC:	Cubic Centimeter
CCT:	Circuit
CCW:	Counter Clockwise
CEL:	Ceilar
CEM:	Cement
CER:	Ceramic
CF:	Cubic Feet
CFL:	Counterflashing
CFM:	Cubic Feet per Minute
CFS:	Cubic Feet per Second
CFT:	Cubic Foot
CHAM:	Chamfer
CHAN:	Channel
CHBD:	Chalkboard
CI.:	Cast Iron
CIR:	Circle, Circular, Circuit
CIRC:	Circumference
CJ:	Control Joint
CK:	Caulking
CKT:	Circuit
CL:	Centerline, Closet
CLG:	Ceiling
CLKG:	Caulking
CLH:	Clothes Line Hook
CLL:	Contract Limit Line
CLO:	Closet
CLP:	Clamp
CLR:	Clear
CMU:	Concrete Masonry Unit
CND:	Condensate
CNTR:	Center, Counter
C.O.:	Cased Opening
CO:	Company, Cleanout, Cased Opening
COEF:	Coefficient
COL:	Column
COM:	Common
COMB:	Combination, Combustion
COML:	Commercial
COMP:	Composition, Compressed
COMPO:	Composition
COMPT:	Compartment
CON:	Construction
CONC:	Concrete
CONCP:	Concrete Painted
COND:	Condenser, Conduit
CONN:	Connection
CONST:	Construction
CONSTR:	Construction
CONT:	Continuous, Continue, Control
CONTR:	Contractor
COP:	Copper
COR:	Corner, Corridor
CORR:	Corridor, Corrugate
COV:	Cover
CPL:	Cement Plaster
CPR:	Copper
CPT:	Carpet
CRPT:	Carpet
CRS:	Course, Cold Rolled Steel
CS:	Countersink
CSG:	Casing
CSK:	Countersink
CSMT:	Casement
CSN:	Caisson
CSS:	Countersunk Screw
CSTG:	Casting
CT:	Ceramic Tile, Cork Tile)
CTD:	Coated
CTR:	Center, Counter
CTSK:	Countersunk
CU. FT.:	Cubic Feet
CU. YD.:	Cubic Yard
CUR:	Current
CV:	Check Valve
CWR:	Condensate Waste Return
CWS:	Condensate Waste Supply
CY:	Cubic Yard, Cycle
CYL:	Cylinder
CYL L:	Cylinder Lock
DB:	Decibel
DBL:	Double
DBT:	Drybulb Temperature
DC:	Direct Current
DCV:	Detector Check Valve
DD:	Driveway Drain, Deck Drain
DEG:	Degree
DEGC:	Degree Celcius
DEGF:	Degree Farenheit
DEM:	Demolish
DEMO:	Demolition
DEP:	Depressed
DEPT:	Department
DET:	Detail
DIAG:	Diagonal
DIA:	Diameter
DIAM:	Diameter
DIFF:	Diffuser
DIM:	Dimension
DISL:	Disposal
DISP:	Dispenser
DIV:	Division
DL:	Dead Load
DN:	Down
DPR:	Damper
DR:	Door, Drain, Dining Room
DS:	Downspout
DT:	Drain Tile
DTL:	Detail
DVTL:	Dovetail
DWG:	Drawing
DWGS:	Drawings
DWL:	Dowel
DWP:	Drywall, Painted
DWR:	Drawer
DS:	Downspout
E:	East, Enamel, Exhaust
E TO E:	End to End
EA:	Each
EB:	Expansion Bolt
ECC:	Eccentric
EE:	Each End
EF:	Each Face
EG:	Edge Grain
EIFS:	Exterior Insulation and Finish System
EJ:	Expansion Joint
EL:	Elevation, Elevator
ELB:	Elbow
ELEC:	Electrical
ELECT:	Electrical
ELEV:	Elevator, Elevation
ELP:	Emergency Lighting Panel
EM:	Emergency
EMER:	Emergency
ENCL:	Enclosure
ENG:	Engineer
ENGR:	Engineer
ENJF:	Expanded Neoprene Joint Filler
ENT:	Entrance
ENTR:	Entrance
EPDM:	Ethylene Propylene Diene Monomer
EQ:	Equal
EQP:	Equipment
EQPT:	Equipment
EQUIP:	Equipment
ESC:	Escalator
EST:	Estimate
EVAP:	Evaporator
EW:	Each Way
EX:	Existing
EXC:	Excavate
EXCAV:	Excavate
EXEC:	Executive, Execution
EXG:	Existing
EXH:	Exhaust
EXH AIR:	Exhaust Air
EXIST:	Existing
EXP:	Expansion, Exposed
EXPN:	Expansion
EXT:	Exterior, Extinguish
EXTR:	Extrude
F:	Degrees Fahrenheit, Fuse
F TO F:	Face to Face
FA:	Fire Alarm, Fresh Air
FAB:	Fabricate
FABR:	Fabricate
FAO:	Finish All Over
FAR:	Floor Area Ratio
FAST:	Fastener, Fasten
FB:	Flat Bar, Face Brick, Floor Box
FBD:	Fiberboard
FC:	File Cabinet, Foot Candle
FD:	Floor drain
FDN:	Foundation
FDTN:	Foundation
FE:	Fire Extinguisher
FEC:	Fire Extinguisher Cabinet
FF:	Far Face, Finished Floor, Factory Finish
FFE:	Finished Floor Elevation
FF&E:	Fixtures, Furnishings & Equipment
FFL:	Finished Floor Line
FGL:	Fiberglass
FGR:	Fiberglass reinforced
FH:	Flat Head, Fire Hose
FHC:	Fire Hose Cabinet
FHMS:	Flat head machine screw
FHWS:	Flat Head Wood Screw
FHY:	Fire Hydrant
FIL:	Fillet
FIN:	Finish, Finished
FITG:	Fitting
FIX:	Fixture
FIXT:	Fixture
FL:	Floor, Fire Line
FLASH:	Flashing
FLG:	Flooring
FLG:	Flange, Flashing, Flooring
FLR:	Floor
FLUOR:	Fluorescent
FLX:	Flexible
FO:	Finished Opening
FOB:	Free On Board
FOC:	Face of Concrete
FOF:	Face of Finish
FOS:	Face of Studs
FP:	Fireproof
FPL:	Fireplace
FPM:	Feet per minute
FPRF:	Fireproof
FPS:	Feet per Second
FR:	Frame, Front, Fire Riser
FRG:	Forged
FRM:	Frame
FRPF:	Fireproof
FRT:	Fire Retardant
FS:	Full Size, Far Side, Floor Sink
FSCW:	Flush Solid Core Wood
FT:	Foot, Feet, Fully Tempered
FTG:	Footing, Fitting
FUR:	Furred
FURN:	Furnish, Furniture
FURR:	Furring
FUT:	Future
G:	Gas, Girder, Gutter, Gram
GA:	Gauge, Gage
GAGE:	Gauge
GAL:	Gallon
GALV:	Galvanized
GB:	Grab Bar, Glass Block, Gypsum Board
GC:	General Contractor
GCMU:	Glazed Concrete Masonry Unit
GD:	Guard, Grade, Gutter Drain
GEN:	General; Generator
GENL:	General
GF:	Ground Face
GFCI:	Ground Fault Circuit Interrupted
GFI:	Ground Fault Interrupted
GRC:	Glass Reinforced Concrete
GFRC:	Glass Fiber Reinforced Concrete
GI:	Galvanized Iron
GKT:	Gasket
GL:	Glass
GLB:	Glass Block
GLZ:	Glaze
GND:	Ground
GOV'T:	Government
GP:	Galvanized Pipe
GPH:	Gallons Per Hour
GPL:	Gypsum Lath
GPM:	Gallons per Minute
GPP:	Gypsum Plaster Painted
GPR:	Gypsum Plaster
GPS:	Gallons per Second
GR:	Grade, Grille, Granite
GRAN:	Granular, Granite
GRND:	Ground
GRTG:	Grating
GT:	Grout
GV:	Galvanized
GVL:	Gravel
GYP:	Gypsum
GYP BD:	Gypsum Board
H:	High
HA:	Hectare
HB:	Hose Bib
HC:	Hollow Core, Handicapped
HD:	Head, Heavy Duty
HDN:	Harden
HDR:	Header
HDW:	Hardware
HEX:	Hexagonal
HGT:	Height
HHMB:	Hex Head Machine Bolt
HID:	High Intensity Discharge
HM:	Hollow Metal
HMP:	Hollow Metal, Painted
HOR:	Horizontal
HORIZ:	Horizontal
HOSP:	Hospital
HP:	High Point, High Pressure, Horse Power
HPS:	High Pressure Sodium, High Pressure Steam
HR:	Hour
HRS:	Hot Rolled Steel, Hours
HSG:	Housing
HT:	Height, Heat, High Tension Duct
HTG:	Heating
HTR:	Heater
HV:	High Voltage
HVAC:	Heating, Ventilating & Air Conditioning
HVY:	Heavy
HW:	Hot Water, Heavy Wall
HWD:	Hardwood
HWH:	Hot Water Heater
HWS:	Hot Water Supply
HWY:	Higtway
HYD:	Hydraulic
HYDRO:	Hydrostatic
HZ:	Hertz (Cycles Per Second)
I:	Iron, Current (electrical)
ID:	Inside Diameter
IN:	Inch
INC:	Incandescent
INCAND:	Incandescent
INCL:	Incline, Include
INCR:	Increase
INFO:	Information
INS:	Insulate, Insulation
INSP:	Inspect
INSTL:	Install
INSUL:	Insulation
INT:	Interior, Internal
INTERM:	Intermediate
INTM:	Intermediate
INV:	Invert
IP:	Iron Pipe
J:	Joist
J-BOX:	Junction Box
JAN:	Janitor
JB:	Junction Box
JC:	Janitor's Closet
JCT:	Junction
JF:	Joint Filler
JST:	Joist
JT:	Joint
K:	Kelvin (temperature)
KG:	Kilogram
KIP:	Kilopound (1000 pounds)
KIT:	Kitchen
KM:	Kilometer
KO:	Knockout
KVA:	Kilovolt-Ampere
KW:	Kilowatt
KWH:	Kilowatt Hour
KWHR:	Kilowatt Hour
L:	Angle, Left, Length, Long
LA:	Landscape Architect, Lightning Arrester
LAB:	Laboratory, Labor
LAD:	Ladder
LAT:	Lateral
LAV:	Lavatory
LB:	Pound (weight), Lag Bolt
LBL:	Label
LBR:	Lumber
LCD:	Liquid Crystal Diode
LH:	Left Hand
LIB:	Library
LIBR:	Library
LIN:	Linear
LINO:	Linoleum
LIQ:	Liquid
LKR:	Locker
LL:	Live Load
LN:	Length
LNDG:	Landing
LNTL:	Lintel
LOC:	Locate
LP:	Low Point, Low Pressure
LPS:	Low Pressure Sodium, Low Pressure Steam
LR:	Living Room
LS:	Limestone, Loud Speaker
LT:	Light, Low Tension Duct, Laundry Tray
LTG:	Lighting
LTL:	Lintel
LT WT:	Lightweight
LVR:	Louver
LW:	Light Weight
LWC:	Light Weight Concrete
M:	Meter, Bending Moment
MACH:	Machine
MAINT:	Maintenance
MAN:	Manual
MAT:	Material
MATL:	Material
MAX:	Maximum
MB:	Mail Box, Machine Bolt, Mop Basin
ME:	Mechanical Engineer
MECH:	Mechanical
MED:	Medium
MED CAB:	Medicine Cabinet
MEMB:	Membrane
MERC:	Mercury Vapor
MET:	Metal
MEZZ:	Mezzanine
MFD:	Manufactured, Metal Floor Deck
MFG:	Manufacturer, Manufacturing
MFR:	Manufacture, Manufacturer
MH:	Manhole
MI:	Miles
MIKE:	Microphone
MIN:	Minimum
MIR:	Mirror
MISC:	Miscellaneous
M&B/P:	Metal Lath & Plaster
MLD:	Molding
MLDG:	Molding
MM:	Millimeter
MO:	Masonry Opening
MOD:	Module
MONO:	Monolithic
MOV:	Movable
MP:	Metal Acoustical Panel
MT:	Mount, Mounted
MTD:	Mounted
MTL:	Material, Metal
MTR:	Motor
MULL:	Mullion
MULL:	Mullion
MV:	Mercury Vapor
MWP:	Maximum Working Pressure
MWX:	Millwork
N:	North, Nitrogen
NAP:	Napkin
NAT:	Natural
NATL:	Natural
NB:	"Nota Bene" Latin phrase for "Take Special Note"
NEC:	National Electrical Code
NEUT:	Neutral
NF:	Near Face
NIC:	Not In Contract
NO:	Number, Normally Open
NOM:	Nominal
NRC:	Noise Reduction Coefficient
NS:	Near Side
NTS:	Not To Scale
O:	Oxygen
OA:	Outside Air, Overall
OB:	Obscure
OBS:	Obscure
OC:	On Center
OD:	Outside Diameter
OF:	Outside Face
OFF:	Office
OH:	Overhead
OHD:	Overhead Door
OHMS:	Oval Head Machine Screw
OHWS:	Oval Head Wood Screw
OI:	Ornamental Iron
OP:	Opaque
OPG:	Opening
OPNG:	Opening
OPP:	Opposite
OR:	Outside Radius
ORN:	Ornamental
OUT:	Outlet
OVL:	Overflow
OZ:	Ounce
P:	Pitch, Power Panel, Paint
P:	LAM: Plastic Laminate
PA:	Public Address
PAF:	Powder Actuated Fasteners
PAR:	Parallel
PARTN:	Partition
PASS:	Passage, Passenger
PBL:	Pull Box, Push Button, Panic Bar
PC:	Pull Chain, Piece, Precast Concrete
PCF:	Pounds per cubic foot
PE:	Porcelain Enamel, Professional Engineer
PED:	Pedestal, Pedestrian
PERF:	Perforate, Performance
PERIM:	Perimeter
PERP:	Perpendicular
PFN:	Prefinished
PG:	Pressure Gauge
PH:	Phase, Preheat, Phone
PIV:	Pivoted, Post Indicator Valve
PJF:	Preformed Joint Filler
PKG:	Parking
PKWY:	Parkway
PL:	Plate, Plan, Property Line
PLAS:	Plaster, Plastic
PLBG:	Plumbing
PLF:	Pounds per Lineal Foot
PLG:	Plumbing
PLMBG:	Plumbing
PLTF:	Platform
PLWD:	Plywood
PLYWD:	Plywood
PLUMB:	Plumbing
PNEU:	Pneumatic
PNL:	Panel
PNT:	Paint
POL:	Polish, Polished
PORC:	Porcelain
PORT:	Portable
PR:	Pair
PRC:	Precast
PRCST:	Precast
PRE:	Prefinished
PREFAB:	Prefabricated
PRES:	Pressure
PRESS:	Pressure
PRI:	Primary
PRTN:	Partition
PS:	Plumbing Stack
PSF:	Pounds per square foot
PSI:	Pounds per square inch
PSIG:	Pounds per square inch gage
PT:	Point
PTN:	Partition
PTR:	Paper Towel Receptacle
PV:	Paving
PVC:	Polyvinyl Chloride
PVG:	Paving
PVM'T:	Pavement
PVT:	Private
PWR:	Power
QUAL:	Quality
QUANT:	Quantity
QT:	Quarry Tile, Quart
QTR:	Quarter
QTY:	Quantity
R:	Riser, Radius, Resistance, Relay Panel
RA:	Return Air, Registered Architect
RAD:	Radius, Radiator
RADN:	Radian
RB:	Rubber, Rubber Base, Resilient Base
RBT:	Rabbet
RCF:	Raised Computer Floor
RCP:	Reflected Ceiling Plan
RD:	Roof Drain, Round
REBAR:	Reinforcing Bar
REC:	Receiver
RECEP:	Receptacle
RECP:	Receptacle
RED:	Reducer
REF:	Refer, Reference, Refrigerator
REFL:	Reflected, Reflector
REFR:	Refrigerate, Refrigerator
REG:	Register, Regular
REINF:	Reinforcement, or Reinforce
REM:	Remove, Removable
REQ:	Require, Required
REQD:	Required
RES:	Resilient
RESIL:	Resilient
REST:	Resistance
RET:	Return, Retaining
RETG:	Retaining
REV:	Reverse, Revise, Revision
RF:	Roof
RFG:	Roofing
RGTR:	Register
RGH:	Rough
RH:	Right Hand, Reheat, Relative Humidity
RHMS:	Round Head Machine Screw
RHR:	Right Hand Reverse, Reheater
RHWS:	Round Head Wood Screw
RM:	Room
RMV:	Remove
RO:	Rough Opening
ROW:	Right of Way
RPM:	Revolutions per Minute
RPT:	Repeat (like "Ditto")
RR:	Railroad
RT:	Right
RVS:	Reverse Side
RVT:	Rivet
S:	South, Sealant, Supply, Sink
SAS:	Surfaced 4 Sides
SALV:	Salvage
SAN:	Sanitary
SC:	Solid Core, Self Closing
SCH:	Schedule
SCHED:	Schedule
SCR:	Screen
SCUP:	Scupper
SCWD:	Solid Core Wood
SD:	Soap Dispenser
SE:	Structural Engineer
SEAL:	Sealant
SEC:	Second, Section, Secondary
SECT:	Section
SECY:	Secretary
SEL:	Select
SERV:	Service
SF:	Square Foot
SH:	Shelf, Sheet, Shower
SHR:	Shower
SHT:	Sheet
SHTH:	Sheathing
SHTHG:	Sheathing
SHWR:	Shower
SIG:	Signal
SIM:	Similar
SK:	Sink
SKL:	Skylight
SLOT:	Slotted
SLV:	Sleeve
SNT:	Sealant
SPC:	Space
SPEC:	Specification, Specifications
SPECS:	Specifications
SPK:	Speaker
SPL:	Special
SPLR:	Sprinkler
SPM:	Sprinkler Main
SQ:	Square
SS:	Stainless Steel
SSD:	Sub-soil Drain
SSK:	Service Sink
SST:	Stainless Steel
ST:	Straight, Storm Water
STA:	Station
STC:	Sound Transmission Class
STD:	Standard
STG:	Storage, Seating
STIFF:	Stiffener
STK:	Stack
STL:	Steel
STM:	Steam
STO:	Storage
STOR:	Storage
STR:	Straight (re-bars), Structural
STRL:	Structural
STRT:	Straight
STRUC:	Structural
STRUCT:	Structural
STWY:	Stairway
SUCT:	Suction
SUPP:	Supplementary, Supplement
SUR:	Surface
SUSP:	Suspended, Suspend
SY:	Square Yard
SYM:	Symmetrical
SYN:	Synthetic
SYS:	System
T:	Tread, Thermostat, Tee
T&B:	Top and Bottom
T&G:	Tongue & Groove
TAN:	Tangent
TB:	Towel Bar
TC:	Top of Curb, Terracotta
TD:	Trench Drain
TEL:	Telephone
TEMP:	Temporary, Tempered, Temperature
TEN:	Tenant
TERR:	Terrazzo
TERM:	Terminal
TGL:	Toggle
TH:	Thermostat
THK:	Thick, Thickness
THKNS:	Thickness
THR:	Threshold
THRESH:	Threshold
THRM:	Thermal
THRMST:	Thermostat
TLT:	Toilet
TOL:	Tolerance
TOS:	Top of Slab, Top of Steel
TP:	Top of Pavement
TPH:	Toilet Paper Holder
TR:	Tread, Transom
TRANS:	Transformer, Translucent
TRD:	Tread
TS:	Time Switch
TSTAT:	Thermostat
TV:	Television
TW:	Top of Wall, Thin Wall (conduit)
TYP:	Typical
TZ:	Terrazzo
UC:	Undercut
UL:	Underwriters' Laboratories
UNEX:	Unexcavated
UNEXC:	Unexcavated
UNF:	Unfinished
UNFIN:	Unfinished
UNO:	Unless Noted Otherwise
UP:	Uppainted
URI:	Urinal
USG:	United States Gauge
USS:	United States Standard
UT:	Utility
V:	Volt, Valve, Vinyl, Vent, Ventilator
VA:	Volt Ampere
VAC:	Vacuum
VB:	Vapor Barrier, Vinyl Base
VC:	Varnished Cambric
VCT:	Vinyl Composition Tile
VENT:	Ventilate, Ventilator
VERT:	Vertical
VEST:	Vestibule
VIF:	Verify in the Field
VIN:	Vinyl
VLT:	Vault
VNR:	Veneer
VOL:	Volume
VP:	Vapor Proof, Vent Pipe
VR:	Vapor Retarder, Vertical Riser
VTR:	Vent Through Roof
W:	West, Width, Wide, Watt, Waste, Water
W/:	With
W/O:	Without
WC:	Water closet
WD:	Wood
WDW:	Window
WF:	Wide Flange (structural steel)
WH:	Water Heater, Wall Hung, Wall Hydrant
WIN:	Window
WM:	Wire Mesh, Water Meter
WP:	Waterproof, Weatherproof
WPR:	Waterproofing
WR:	Water Resistant, Waste Receptacle
WS:	Weatherstripping, Water Stop
WT:	Weight, Water Table, Watertight
WWF:	Welded Wire Fabric
XH:	Extra Heavy
YD:	Yard
YR:	Year

Project General Notes

1. These drawings and specifications are the property and the copyright of TECHNE. No use, copies or alterations of this material is allowed unless the written permission of TECHNE or Abhay Schweitzer, is granted prior to use, except for the temporary use to construct the said work described in the project title block. No rights, ownership privileges or reuse of information contained herein is conveyed, allowed or transferred to any party. © TECHNE.
2. Before commencing any work on the site the General Contractor shall verify locations of all site dimensions and site conditions. These include but are not limited to property lines, required setback lines to all new or existing building walls, easements (if any), existing grade locations, finish floor elevations, existing site utilities, and any other new or existing site items which could affect in any way the construction of the building. Flag or otherwise mark all property lines, easements (if any), underground utilities or any other items as needed.
3. All conditions or dimensions on these plans shall be verified in the field by the General Contractor with actual site conditions. Written dimensions shall take precedence over scaled dimensions and shall be verified on the job site. On-site verification of all dimensions and conditions shall be the sole responsibility of the General Contractor and Subcontractors.
4. These drawings have been prepared from the latest information available on existing conditions. Minor variations may occur in the actual construction. Any discrepancy or area of confusion between field conditions and these drawings shall be brought to the attention of TECHNE prior to proceeding with work in question. Do not proceed with work in question until TECHNE issues written directions.
5. In case of conflict within the drawings the order of precedent shall be: 1) specific details, 2) drawing notes, 3) specifications and (4) general notes.
6. Neither the Owner nor TECHNE shall enforce safety measures or regulations. They are the General Contractor's sole responsibility.
7. The General Contractor and Subcontractor's work shall be in accordance with all applicable federal, state, and local building codes and agency standards.

Site Preparation

8. Prior to excavation, General Contractor shall confirm location of underground utilities.
9. In the event that utilities or concealed structures are discovered during construction at exposed or unexposed locations, the General Contractor shall stop work immediately in that area and question or notify TECHNE and/or utility company immediately.
10. The General Contractor and Subcontractor shall be responsible for the appropriate hook up to all utilities required to support the work.
11. The General Contractor shall protect the adjacent properties, including, but not limited to dust, trash, or damages due to demolition, excavation, construction and/or flooding originating on the site.
12. These contract documents do not contemplate the handling or treatment of asbestos and/or any hazardous waste materials. Should any hazardous materials be discovered, the General Contractor shall notify the Owner immediately by telephone and in writing.
13. The General Contractor shall install and maintain a phone at the job site for the duration of construction.
14. A soil compaction report shall be provided to the building inspector at the job site prior to placement of concrete for the new foundation if requested by the city.
15. It is the General Contractor's responsibility to grade the site and to slope all grading and concrete work to provide positive drainage away from the building and to area storm drains.

Demolition

16. All excavation and grading shall comply with OSHA and other governing regulations.
17. Shoring shall be provided where demolition of support structures occur.
18. Prior to the start of any demolition or construction, the General Contractor shall inspect and prepare an inventory of all items noted to be relocated or salvaged and verify that these items are in good working condition and able to be relocated. The General Contracto shall present this inventory to the Owner and TEHNE for their approval. The General Contractor shall be held responsible for replacing any re-locatable item damaged during the demolition process. Salvaged items shall be the Owner's choosing and shall be the Owner's property.

Floor Plan

19. Interior finishes must conform to the requirements of the latest edition of the California Building Code. All decorative materials are required to be maintained in a flame-retardant condition.
20. Different floor finishes shall meet under the door, unless otherwise noted.
21. Smoke detectors shall be provided in all sleeping rooms, in adjacent hallways, and in any other area as required by the latest edition of the California Building Code.
22. Maintain 1-hr fire resistive wall and ceiling construction between the garage and the residence for occupancy separation.
23. Glass and glazing shall conform to the latest edition of the California Building Code. All glazing panels adjacent to doors and within 18" of walking surfaces shall be tempered.
24. Provide R-13 insulation in all exterior walls and bathroom walls. Provide R-19 insulation between floors and R-30 in attic space.
25. Provide emergency exit doors or windows from sleeping rooms per the latest edition of the California Building Code .The minimum net clear opening for emergency escape and rescue grade-floor openings shall be 5 square feet (0.46 m2). Minimum opening height shall be 24". Minimum opening width shall be 20". The bottom of the clear opening shall not be greater than 44 inches (1118 mm) measured from the floor.
26. Provide under-floor crawl space ventilation in foundation walls of not less than 1/150 of area ventilated. Provide corrosion resistant metal mesh screen frame at each opening.

Framing

27. Provide solid blocking in wall framing for all cabinets, countertops, mirrors, shelving, light fixtures, and miscellaneous wall and ceiling mounted or recessed items.
28. Contractor shall coordinate soffit framing with the plan to allow adequate space for installation of light fixtures and mechanical equipment.
29. Provide draft stop in the attic space. Attic space shall not exceed 3,000 sq. ft., or 60'-0" in horizontal length.
30. All wood within 6" of earth or 1" of concrete shall be redwood or pressure treated.
31. Stairways and landings shall be constructed as required by the latest edition of the California Building Code.
32. Hold down anchors to be tied in place prior to calling for foundation inspection.
33. Floor sheathing shall be screwed and glued to floor joists.
34. Provide fire blocking at floor, ceiling, coves and mid-height of walls over 10'-0" in height.

Finish

35. Install Duroc Tile Backer Board by United States Gypsum or equal on all interior walls, countertops and ceilings to receive tile. Install Duroc according to the manufacturer's recommended specifications.
36. Interior gypsum board corners shall be square. Interior gypsum board texture shall be per interior finish schedule.

Exterior

37. All exposed metal flashing shall be painted to match adjacent surfaces.
38. A weep screed or weep holes shall be provided at or below the foundation plate line for all exterior stud wall finish on the exterior stucco. Weeps shall be placed a minimum of 4" above grade.
39. No vent pipe or any projection shall project above 30'-0' from finish grade, new or preexisting 5'-0" from building face. The highest point of the roof shall not exceed 30'-0" if in the Coastal Overlay zone.

Roofing

40. Roofing shall be installed in accordance with manufacturer's specific installation instructions. Provide all required sheet metal flashing and caulking. All roofing shall be Class A assembly.
41. Provide attic ventilation in roof eaves or in top of wall under gable roof ends of not less than 1/150 of area ventilated. Provide corrosion resistant metal mesh screen in wood or metal frame at each opening.

Plumbing

42. Provide shower heads with a maximum flow of 2.0 gallons per minute.
43. Provide lavatory faucets with a maximum flow of 1.5 gallons per minute.
44. Provide ultra low flush toilets.
45. Provide kitchen faucets with a maximum flow of 1.8 gallons per minute (GPM).
46. All ABS and PVC piping and fittings shall be enclosed within walls and floors covered with "type X gypsum board" or similar assemblies that provide the same level of fire protection. Protection of membrane penetrations is not required.
47. Permanent vacuum breakers shall be installed with all hose bibs.
48. All water closets shall have a minimum clearance of 15" from the centerline of the fixture to the side and 24" from the front of the fixture.

Mechanical

49. All mechanical and electrical systems shall be installed in accordance with approved plans and governing codes. Electrical and mechanical systems shall be tested and approved to be in proper working condition to the satisfaction of the building inspector before the issuance of the certificate of occupancy.
50. All thermostats shall be of the automatic changeover type to sequence heating or cooling. Set point range shall be up to 10 degrees Fahrenheit between full heating and cooling. Adjustable temperature differential shall be one and one-half degrees Fahrenheit.
51. Equipment shall have the capacity of terminating all cooling at a temperature of not more than 78 degrees Fahrenheit.
52. At least one automatic space temperature control device shall be provided for each zone.
53. All ductwork shall be constructed, erected and tested in accordance with the most restrictive of local regulation procedures. Refer to the standards adopted by the Sheet Metal and Air Conditioning Contractors National Association as detailed in the ASHRAE handbook of fundamentals.
54. Provide bathroom ventilation of not less than 5 air changes per hour.
    54.1. Exhaust fans which terminate outside the building shall be provided in every bathroom that contains a shower or tub. Unless functioning as part of a whole house ventilation system, fans must be controlled by a humidistat which can be adjusted between 50 and 80 percent.
55. Attic and/or under-floor installation of HVAC units must comply with the latest edition of the California Mechanical Code.

Electrical

56. All circuit breaker switched 120V AC light circuits or convince outlets, must use only type GFCI or AFCI circuit breakers.
57. Electrical outlets located in wet areas, bathrooms and laundry rooms, at the exterior or within 6'-0" of the kitchen sink, shall be provided with ground fault interrupter switch (GFCI).
58. Wiring in plenums shall be in conduit or conform to Articles 300-21 and 300-22, NEC.

Green Code

59. All plumbing fixtures shall be water conserving and comply with the 2013 CGBSC Sec 4.303.1.
60. Multiple Shower Heads: Per 2013 CGBSC Sec 4.303.1.3.2, when a shower is served by more than one showerhead, the combined flow rate of all showerheads and/or other shower outlets controlled by a single valve shall not exceed 2.0 gallons per minute at 80 psi, or the shower shall be designated to only allow one shower outlet to be in operation at at time. Handheld showers are considered showerheads.
61. Per 2013 CGBSC Sec 4.303.2, plumbing fixtures (water closets and urinals) and fittings (faucets and showerheads) shall be installed in accordance with the California Plumbing Code (CPC) and Table 1401.1 of the CPC.
62. Automatic irrigation system controllers for landscaping provided by the builder and installed at the time of final inspection shall comply with the following:
    62.1. Controllers shall be weather- or soil moisture-based controllers that automatically adjust irrigation in response to changes in plants' needs as weather conditions change.
    62.2. Weather-based controllers without integral rain sensors or communication systems that account for local rainfall shall have a separate wired or wireless rain sensor.
63. Per 2013 Green Code Sec 4.503.1 Any installed gas fireplace shall be a direct-vent sealed-combustion type. Any installed woodstove or pellet stove shall comply with U.S. EPA Phase II emission limits where applicable. Woodstoves, pellet stoves and fireplaces shall also comply with applicable local ordinances.
64. Per 2013 Green Code Sec 4.506.1 Mechanical exhaust fans which exhaust directly from bathrooms shall comply with the following:
    64.1. Fans shall be ENERGY STAR compliant and be ducted to terminate outside the building.
    64.2. Unless functioning as a component of a whole house ventilation system, fans must

DIVISION 1- GENERAL REQUIREMENTS AND CONDITIONS

1100 SUMMARY OF WORK

Scope

1. The scope of this section shall cover the general condition, special conditions, alternates, submittals, and substitutions procedures governing the work by the General Contractor, Sub contractor and related trades on this project.

General Conditions

2. The Project Specifications, Construction Drawings, Bid Package, Structural Calculations, Title 24 Report and Geotechnical Soils Report (if prepared) are part of this Construction Document Package.
3. These drawings have been prepared from the latest information available on existing conditions. Minor variations may occur in the actual construction. The Contractor and-sub-contractor shall verify all existing conditions and dimensions on the drawings. Notify the Architect of any discrepancies prior to starting or ordering materials.
4. The scope of work for this project is as shown on the "Project Scope" as shown on Sheet "G001" of this set.
5. The Geotechnical Report if listed in the project Directory shall be a part of these documents and all recommendations included in full. Design bearing value shall be as indicated on the drawings.
6. The Structural Calculations if listed in the project Directory shall be part of these documents with all recommendations incorporated in the Construction Documents.
7. The Energy Calculations if listed in the project Directory shall be part of these documents and all recommendations and mandatory compliance requirements included as such.
8. These contract documents do not contemplate handling of treatment of asbestos and/or any hazardous waste materials. Should any hazardous materials be discovered, the Contractor shall notify the Owner at once by telephone and in writing.

01013 PROJECT GENERAL REQUIREMENTS

1. The Contractor and sub-contractors work shall be in accordance with all applicable federal, state, and local building codes and agency standards.
2. All construction shall conform to the Latest Adopted Editions of the California Building Code (CBC), California Plumbing Code (CPC), California Mechanical Code (CMC), California Electric Code (CEC), California Energy Code (CEC) and all applicable local, state, and national codes, ordinances and laws.
3. The Architect shall not be held responsible for any means, methods and techniques of construction work, safety in, on, or about the project site, or the Contractors failure to confirm to the Construction Documents, codes, regulations, and laws, for the performance of the work by the Contractor in a timely satisfactory manner. The contractor shall be responsible for all work place safety and CAL OSHA regulations.
4. All work shall conform to the latest California State Energy Conservation Regulations (Title 24).
5. Product manufacturer's written recommendations, drawings and specifications are to be followed under all conditions. Any conflict with drawings and specifications and above shall be determined by the Architect with no change in contract price.
6. All construction materials shall be new. Unless specifically noted in the plans.

01013 SPECIAL PROJECT GENERAL REQUIREMENTS

7. These drawings and specifications imply a COMPLETE building ready and capable of being occupied and used in a normal manner. All light fixtures shall have bulbs. All exterior doors shall have locks. Street numbers and a mailbox shall be installed. All equipment shall function properly. All surfaces shall be finished. All debris shall be removed. All materials and equipment installed shall be new. All work shall be performed at the highest standards of quality and craftsmanship.
8. In case of any difference between drawings and/or specifications, discrepancy shall be called to the attention of the Architect and the Architect shall choose which governs.
9. Written dimensions on drawings shall take precedence over lengths measurements by scale.
10. All requirements, standards, grades, species and strengths of materials and finishes listed in these specifications are minimums. Should drawings or reports conflict with specifications, the most resistive and superior quality shall apply.
11. The contractor shall be responsible for the accurate placement of the building on the site. Any existing structures, which are not located as shown on the plans, shall be brought to the Architect's attention immediately.
12. This structure is designed as a stable unit after all components are in place. The contractor shall be responsible to provide temporary bracing as required to insure the vertical and lateral stability of the entire structure or a portion thereof during construction.
13. If a Raised Floor System is used; provide under floor ventilation 12" x 18" space in each new raised floor foundation wall for each 100 square feet of underfloor space. Provide copper mesh screen frame with ¼" inch maximum mesh at each opening.
14. Provide attic ventilation at eave line or in top of wall for gable roof ends to equal not less than 1/150 of area ventilated. Provide metal mesh screen in wood or metal frame at each opening with a maximum ¼-inch mesh covering.
15. All outward swinging doors shall have an exterior landing within 1" of the top of the door threshold. Caulk and waterproof under the threshold. Slope landing away from the structure ¼" per foot.
16. Soil compaction report shall be provided to the building inspector at the job site prior to placement of concrete for the new foundation if requested by the City or Governing Agency.
17. Prior to the start of any demolition or construction, the contractor shall inspect and prepare an inventory of all items noted to be relocated or salvaged and verify that these items are in good working condition and able to be relocated. The contractor shall present this inventory to the owner and the architect for their approval. The contractor shall be held responsible for replacing any re-locatable item damaged during the demolition process. Salvaged items shall be the owner's choosing and shall be the owner's property.
18. Coordinate all demolition work with architectural, structural, electrical, mechanical, plumbing and landscaping drawings.
19. Coordinate inspection and testing with Soils, Structural, Mechanical, and Electrical Engineers and with their reports, drawings and specifications.
20. Refer to structural, mechanical, plumbing and electrical drawings for other general notes and requirements and coordinate with architectural drawings.
21. Provide draft stop on the attic space. Attic space shall not exceed 3,000 sq. ft.
22. Wood Frame Construction: (minimums, unless noted otherwise).
23. Bottom plates shall be pressure treated. All bottom plates shall be anchored to the foundation with 5/8" diameter anchor bolts having 7" minimum embedment (or other approved anchors) at a minimum of 12" from plate ends. (U.N.O.)
24. See framing specifications or detail sheets for the following information: Nailing Schedule , Ripper Attachment (where applicable) and Ceiling & Floor joist schedule.
25. Fire Blocking Notes: At concealed spaces of stud walls, and partitions, including furred spaces at the ceiling and floor levels, and at Maximum 10 foot intervals both vertical and horizontal. At the connections between concealed vertical and horizontal spaces such as soffits, dropped ceilings, and cove ceilings and tops of framed columns. In concealed spaces between stair stringers, at the top and bottom of the run and between studs along and in line with the run of stairs, if the walls under the stairs are unfinished.
26. In openings around vents, pipes, ducts, chimneys, fireplaces, and similar openings, which afford a passage for fire at ceiling and at ceiling and floor levels, use non-combustible materials.
27. At openings between attic spaces and chimney chases for factory-built chimney. Walls having parallel or staggered studs for sound control shall have fire blocks of mineral fiber or glass fiber or other material.
28. The integrity of all fire blocking, and draft stops, shall be maintained.
29. Maintain 1-hr fire resistive wall and ceiling construction between the garage and residence for occupancy separation.
30. See Title 24 Documents for Energy Requirements.

THE CONTRACTOR SHALL:

1. The Contractor shall guarantee all work performed by him directly for the period of one year. Work shall include all materials, fixtures, equipment and labor. Such guarantee shall begin on date of filing of Notice of Final Completion.
2. Notify the Architect about any condition requiring a modification or change, before proceeding with the work in question.
3. The contractor shall investigate, verify and be responsible for all conditions and dimensions of the project and shall notify the Architect of any discrepancies and inconsistencies between drawings, specifications and existing conditions prior to submitting bid.
4. Verify all dimensions, levels and site conditions prior to the start of construction and report any discrepancies immediately to the Architect. Only noted dimensions are to be used for construction purposes. Do not scale drawings! Obtain clarification of dimensions from the Architect when necessary. Errors caused by scaled dimensions shall be corrected by the contractor at the contractor's expense.
5. Notify the Architect promptly, should any questions arise pertaining to the construction documents, or if conditions are found that may prevent the proper excavation of any portion of the work. The contractor shall correct all errors, discrepancies, or omissions which result from his/her failure to notify the Architect before starting fabrication or installation of any item of work.
6. Protect the adjacent properties, including, but not limited to pollution, trash, or damages due to demolition, excavation, construction and/or flooding originating on site.
7. Be held responsible for compliance with the California Safety Orders. Contractor shall coordinate all mechanical and electrical equipment as to weights and exact locations with structural supports. In the event that the purchased equipment deviates in weight and location from those indicated on the plans, the Structural Engineer must be notified, and approval prior to installation.
8. Grade the site and to slope all grading and concrete work to provide positive drainage away from the building and to area storm drains.
9. Be responsible for the appropriate "hook-up" to all utilities required to support the work.
10. Flash, seal and caulk as necessary to achieve a waterproof, watertight building.
11. Coordinate work with all sub-trades and utilities.
12. Provide shoring where demolition of support structures as occurs.
13. Provide and pay for labor, materials and equipment, tools construction equipment and machinery, electrical power, water, heat, telephones and other utilities required for construction, and other facilities and services necessary for proper execution and completion of the work.
14. Pay all legally required sales, consumer and use taxes.
15. Secure and pay for licenses and inspection, as necessary for proper execution and completion of work, which are customarily secured after start of construction and which are applicable at time contract is awarded.
16. The Owner shall pay for all permits and fees required for construction and all material tests and Special Inspections and reports, inspection summaries as required by drawings and specifications.
17. Give notices required by Governmental authorities and by the owner or his/her representative.
18. Maintain on the job site, in good order, one copy of all construction documents and modifications thereto, field test records and inspection reports, correspondence pertaining to the work on site permits and permit sets of plan for the use of building officials.
19. Maintain a separate set of drawings on the site to be marked up by the contractor with "as-built" information for project records.
20. Deliver to the owner, upon project close-out, the permit and record (as-built) sets of construction documents together with operation and maintenance data, warranties, certificates of compliance required by regulatory authorities, binds and such other project records as may be requested by the owner.
21. Be responsible for complete cleanup including removal of stains, putty marks, paint marks, and complete scrub, wax and polishing of surfaces to the satisfaction of the owner and Architect.

01030 ALTERNATIVES

1. Alternatives to an item specified herein, must be approved in writing by the Architect or Owner prior to installation.
2. If the Contractor and/or Sub-Contractors wish to substitute materials or products other than those specified, he shall obtain the Architect's written approval no later than five (5) working days prior to the bid opening date.
3. The decision of the Architect as to the equality and utility of substitutions offered shall be final.

01330 SUBMITTALS

1. Submittals of product data, samples, manufacturer's installation instructions and warranties shall be made by the contractor to the architect when required by a section below or as required by the owner.
2. Provide minimum of Two (2) copies of shop drawings and color samples for all fabricated items including a structure, carpentry, finishes, specialties, equipment, furnishings, elevators, mechanical, electrical and plumbing. Submit and pick up from Architect office all items to be reviewed for his approval.

01350 SUBSTITUTIONS

1. The General Contractor shall inform the Architect in writing of any changes or substitutions to the specified material of this project.
2. Any substitutions or deviation from these specifications must be submitted in writing as a proposed alternate and include all information necessary for evaluation, together with reason or justification for substitution. All substitution shall be forwarded to the Architect and Owner for approval before the final contract for construction is signed.
3. The written decision accepting or denying the proposed alternate by the Architect or Owner shall govern.

01420ABBREVIATIONS AND SYMBOLS

1. Any abbreviation or symbol used in the Construction Documents and not defined as stated above shall be verified with the Architect.

01500 TEMPORARY FACILITIES

1. Provide and maintain all temporary facilities for the project for the duration of the Contract including, but not limited to the following: (Unless otherwise agreed to by the owner)
   A. Work site temporary toilet facilities.
   B. All temporary fences, barricades and protective devices necessary for the safety of workmen, conforming to all governing laws and regulations.
   C. Job site Telephone
   D. Job shack or trailer.
   E. Temporary trash bin or dumpster.

DIVISION 2 - SITE WORK

02050 - SITE PREPARATION

A. Scope

The scope of this section includes all labor, material and equipment necessary to complete all work specified herein and as indicated on the plans. This work shall include but not limited to any site work shown on the Construction Document.

B. Special Requirements

1. All work performed under this sections shall be performed by a State of California licensed contractor.
2. In the event that unknown utilities or structures are found during construction at unexposed or exposed locations, the contractor shall stop work in that area and notify the owner, architect and utility company, immediately.
3. Protect all surrounding surfaces, vegetation and areas to remain from dust and damage during construction.

02220 - DEMOLITION

1. GENERAL REQUIREMENTS

A. Scope

The scope of this section includes all labor, material and equipment necessary to complete all work specified herein and as indicated on the plans. This work shall include demolition and removal of existing structure, flatwork and landscape items as shown on drawings.

B. Special Requirements

1. All work performed under this sections shall be performed by a State of California licensed contractor.
2. Protection: Care of Building and Grounds: Provide, erect and maintain such temporary work as may be required for the protection of the public and those employed in or about the building, including temporary fences, sidewalks, bridges, guardrails around openings and trenches, barricades, night lights and guard lights.
3. Be responsible for all property involved in this Contract including materials, equipment, etc., that may be damaged or stolen, and make good all such damage or loss with no expense to Owner.
4. Adequately protect all trees and shrubs that are apt to be damaged during this operation. The contractor shall be liable for any damage to the same and shall make replacement satisfactory to the owner and without charge.
5. Protect all streets, sidewalks, roads, and pavements: repair all damage to the same.
6. Provide all shoring, bracing and sheeting as required for the safety and proper execution of the work. Remove same when work is completed.

C. Job Conditions

Perform all work in accordance with accepted safety standards. All excavations left exposed during non-working hours shall be sufficiently barricaded to prevent pedestrian or vehicular hazards.

D. References

All work in this section must conform to applicable codes and regulations.

2. PERFORMANCE OF WORK

A.General Notes

1. Verify elevations, dimensions and site conditions before commencing work. In addition, verify with owner disposition of all on site vegetation before any removal.
2. Contractor shall verify all site utility locations. Tag and mark all buried utilities. As required by work on site, shut off, cap, upgrade, or move utilities.
3. Remove all materials carefully to avoid damage to adjacent surfaces. Before start of demolition verify with the owner any item to be saved, covered, or stored. Contractor to pay for and replace any item not intended for demolition but damaged during construction.
4. Contractor shall refer to plans for new work to be incorporated into the existing site work and to proceed with demolition accordingly.
5. The contractor shall provide temporary shoring or bracing should removal of any portion of the structure produce unstable or unsafe conditions.
6. The contractor shall properly and legally dispose all removed demolition material.
7. Remove all existing landscape and tree roots within the outline of new work. Clear the site of all stumps, roots, debris and other deleterious material to a depth not less than twelve (12) inches below the ground surface in that area to be occupied by the proposed building(s) or structure(s).
8. If remaining trees root removal produce potentially unstable trees, contractor shall immediately contact a tree specialist to make recommendations.
9. Perform all work in accordance with the Demolition Plan and Demolition Notes as indicated on the construction documents.

3. COMPLETION OF WORK

At the conclusion of the work, all earth areas shall be raked free of debris and left with a uniform graded surface.

02300 - EARTHWORK

1. GENERAL REQUIREMENTS

A. Scope The scope of this section includes all labor, material and equipment necessary to complete all work specified herein and as indicated on the plans. This work shall include site earthwork but is not limited to all grading, filling, compaction and backfilling.

B. Special Requirements

1. All work performed under this section shall be performed in accordance the C.B.C. chapter 18 and 18a.
2. All work performed under this section shall be performed by a State of California licensed grading or general contractor.
3. All excavation and grading shall comply with OSHA and other governing regulations.
4. Obtain civil engineering drawings (if part of the project scope) and coordinate work herein with site work performed by all trades to insure the orderly progress of the total work.
5. Obtain the location and depth of utility lines, all underground work shown in the Construction Documents or indicated after contacting Dig Alert, all facilities in the vicinity of the Project and any other existing work not specifically indicated, and protect such utility lines, facilities and work from damage.
6. Contact Dig Alert (1-800-227-2600) to verify the location of any and all existing utilities located on the project site or vicinity affected by the project activities.

C. Job Conditions Perform all work in accordance with accepted safety standards. All excavation work left exposed during non-working hours shall be sufficiently barricaded to prevent pedestrian or vehicular hazards.

D. References All work in this section must conform to applicable codes and regulations.

2. MATERIALS

A. Materials to be placed as fill soils shall be approved by the Geotechnical Engineer, Certified Testing laboratory or industry approved material and shall be as specified in the grading specification section of the soils report.

3. PERFORMANCE OF WORK

A. General Notes

Contractor to provide all labor, materials and equipment to excavate, backfill, compact, and grade as required for a complete finished job. If existing elevations, dimensions and/or site conditions are different form those indicated on the plans, report discrepancy and obtain instructions from Architect before starting work. The contractor shall be responsible for the accuracy of all work.

B. Preparation for Grading

Verify elevations, dimensions and site conditions before commencing work. In addition, verify disposition of all site vegetation before any removal.

C. Excavation

1. Excavate foundations to size and depth shown. Footings shall be entirely into solid undisturbed soil or entirely into compacted fill and /or as directed by the soils report / engineer (if part of project team). No un-compacted fill is permitted under footings.
2. Bottoms of all footing excavations shall be level. Excavations are to be kept free of standing water.

D. Backfilling, Fill and Compaction

All structural fill underlying building areas shall be compacted to at least 90 percent of its maximum dry density. Fill material under new driveways and parking areas shall have upper six inches of compacted to 95 percent of dry density. *(For additional information refer to soils report)*

E. Trenching

1. Cut trenches for piping and conduits to minimum sufficient widths and depths as shown on site utility drawings by others as required.
2. All trenching for underground piping, electrical conduits, etc. shall be done in a manner to prevent settlement.
3. Backfilling of trenches shall be compacted to at least 90 percent of its maximum dry density or shall conform to the soils report and/or to utility company requirements.

F. Observation Of Grading

1. Should any loose fill, expansive soil, ground water or other adverse conditions be encountered during excavation, the Owner and Architect shall be notified of the work in question.

G. Finish Grading

1. The contractor shall be responsible for drainage away from all buildings and away from the site both during construction and upon completion.
2. Slope finish grades a minimum of ¼ inch per foot (2%) away from buildings, any portion of the foundation for a distance of four feet. and the edge of slope. Site shall drain so that water will not stand against buildings or flow over the edge of any slope.

4. COMPLETION OF WORK

At the conclusion of the work, all earth areas shall be raked free of debris and left with a uniform finely graded surface. All finish grades shall be held 2 inches below level of sidewalks and a minimum of 6 inches below the finish floor line unless otherwise shown.

02500 - PIPED UTILITIES

Piped or conduit utilities shall be as shown and/or as specified or in the documents prepared by the Architects or Civil Engineer or as required by the Owner.

02620 - SUB-DRAINAGE SYSTEM

Sub-drainage system shall be as shown and specified in the construction documents prepared by the Architects ,Civil Engineer, and/or Landscape Architect or as required by the Owner.

02630 - STORM DRAINAGE SYSTEM

Storm drainage system shall be as shown and specified in the documents prepared by the Architect, Civil Engineer, and/or Landscape Architect or as required by the Owner.

02700 - PAVING AND SURFACING

Paving and surfacing shall be as shown and specified in the Construction Documents, by code or as required by the owner.

02900 - LANDSCAPING

Landscaping shall be as shown and specified for installation at the site in the documents prepared by the Architect, Landscape Architect or as required by the Owner.

DIVISION 3-CONCRETE

03300 CAST IN-PLACE CONCRETE

1. GENERAL REQUIREMENTS

The Structural Specifications will supersede this specification section if the structural specification sheets are included in the project documents for this project.

A. Scope:

The scope of this section includes all labor, material and equipment necessary to complete all work specified herein and as indicated on the plans. This section includes, but is not limited to:

1. Excavation of all footings and foundations.
2. Finish grading under concrete slabs and sand or gravel fills under slabs.
3. Construction of all forms necessary for concrete work.
4. Furnishing and placing of all reinforcing steel, mesh, metal inserts, vapor barrier, dowels, bolts clamps, ties, etc.
5. Furnish and placing of all concrete, interior and exterior of the building including; slabs on grade, footings, grade beams not exceeding 3 feet in height and exterior hardscape flatwork.
6. Removal of forms and cleaning of materials.
7. Special Inspection Testing as required.

B. Special Requirements

1. All materials and installation thereof shall conform to current standards of C. B.C. chapter 19 & 19a and A.C.I. (American Concrete Institute)
2. All work performed under this section shall be performed by a State of California licensed contractor.

2. MATERIALS

A. Concrete

1. All footings, slab-on-grade, and miscellaneous concrete shall have a minimum compressive strength of 2500 PSI at 28 days, unless noted otherwise on plans.
2. Concrete shall have a mixture ratio of 1: 2-1/2 : 3-1/2 by volume with 7 gallons of water maximum per sack of cement, unless noted otherwise on plans.
3. An approved water-reducing admixture may be used in all concrete except footings.
4. Use an approved air-entraining admixture may be used in all concrete (structural and non-structural) where exposed to weather.

B. Reinforcing Steel

All #5 bars and larger to be ASTM A-615, Grade 60. Lap 30 inches.
All #2 through #4 bars to be ASTM A-615, Grade 40. Lap 20 inches.

C. Welded Wire Fabric

Welded wire fabric (WWF) shall be per ASTM A-185 and shall be placed at center of slab. Lap splice to be 8 inches minimum.

D. Portland Cement: - ASTM C-150, Aggregates ASTM C-33.

E. Ready Mix Concrete - Mix and deliver in accordance with ASTM C-94.

3. PERFORMANCE OF WORK

A. Formwork:

The contractor is responsible for formwork design and construction. Construct forms firmly, of sound lumber and plywood, to lines and levels indicated. Brace and fasten to withstand superimposed loads. Remove all form boards as soon as concrete has acquired sufficient strength but not later than completion of framing.

B. Reinforcement:

Provide all reinforcement as required or indicated by the Architectural drawings, Structural drawings or soils report. Footings, slabs, grade beams, stem walls and other reinforced concrete shall have minimum depth, width, anchors and reinforcement as required and as indicated on the drawings.

C. Placing of Concrete

1. Hold down anchors to be tied in place prior to calling for foundation inspection
2. Thoroughly compact concrete by puddling with suitable tools and or vibrators.
3. Minimum concrete cover over steel reinforcement as follows:

• Footings placed against earth	3"
• Formed surfaces exposed to weather or ground	2"
• Slabs-on-grade, top and bottom minimum	1-1/2"
• Exterior wall above grade	1-1/2"
• Interior wall above grade	3/4"
• Tied columns (main steel)	1-1/2"

• Coverage to be equal to one bar diameter minimum.

4. No pipes or ducts shall be paced in concrete columns, walls, or suspended slabs unless specifically detailed.

D. Concrete Finish

1. Finish slabs level or to slopes as shown on drawings. Tolerance 1/8 inch in 10 feet.
2. Provide 3/4 inch chamfer on all exposed poured concrete corners.
3. Slabs to receive tile, screed with straight edge and hand float to a true and uniform surface.
4. Trowel finish slabs, steps, etc., unless otherwise indicated on plans.

E. Construction Joints

1. Construction joints, wherever possible, shall be placed under non-bearing interior partitions at interior floor slabs unless otherwise shown.
2. Construction joints shall not exceed a spacing of 20 feet on center each way, unless noted otherwise on plans or as indicated by the Structural Engineer.
3. Slab control joints shall be constructed with a key, to allow movement of slab.
4. Walkways, driveways, and patio slabs shall be provided with construction joints at approximately 10-foot intervals. Provide expansion joints at street sidewalks, intersecting drives, and change in drive width and at approximately 40 foot intervals on straight runs.

F. Curing:

Shall be as required to maintain moisture content of slabs on grade. Immediately following the finishing operation, keep concrete moist for at least seven days. Concrete slabs and paving shall be protected against damage and/or defacement during construction operations. Areas shall be fog sprayed immediately after finishing operation for a period of 2 hours. During periods of low humidity, wind, or temperatures in excess of 70 degrees, the fog spray shall be applied for a period of 4 hours. Fog spray prior to and during curing and finishing operations if required to keep the concrete moist. Inert curing compounds may be used as permitted by prior submittal and approval by the Architect or Structural Engineer, provided that the compound used is compatible with the floor finishes to be installed over the slab.

G. Defective Concrete

If any concrete work is not formed as indicated, unless under the direction of the owner or their representative; is not true to intended alignments; is not plumb or level where so intended; is not true to intended grades and levels; has excessive cracking, voids, honeycomb or rock pockets, or does not fully conform to the provisions of the contract; then such concrete work shall be deemed to be defective (materials and/or faulty workmanship) and the Contractor shall remove defective concrete from the site and replace it with new concrete at his own expense.

SECTION 03510: GYPSUM CONCRETE

1. Supply and install Gypsum concrete floor underlayment shown on the drawings.
2. Installation shall be by a factory-approved applicator in accordance with the manufacturer's written instructions and requirements of the referenced evaluation.

SECTION 03450 - ARCHITECTURAL PRECAST CONCRETE - PLANT CAST

PART 1 - GENERAL

1. This Section refers to architectural precast concrete units.
2. Architectural precast concrete includes the following:
3. Precast concrete units as defined in the architectural plans. Potentially includes wall caps, columns, balustrade, quoins, pavers, finials, moldings or any other decorative element designed to be cast out of concrete.
4. These are non-structural, self-supporting units.

SUBMITTALS

1. Product data and instructions for manufactured materials and products.
2. Shop drawings prepared by CDI or equal showing complete information concerning the precast concrete units. Indicate member dimensions and cross-section. Unless otherwise noted, anchors will be embedded in a standard configuration.
3. Samples - Submit samples of color options and texture options for selection process.

QUALITY ASSURANCE

1. Fabricator Qualifications:. Fabricator shall have sufficient production capacity to produce, transport and deliver required units without causing delay in the work.
2. Design modifications will be made only as necessary to meet field conditions and to ensure proper fitting of the work and only as acceptable to Architect. Maintain general design concept shown without increasing or decreasing sizes of members or altering profiles and alignment shown without architect's approval. Modifications may need to be considered in view of budget constraints.

DELIVERY, STORAGE AND HANDLING

1. Deliver precast concrete units to project site in such quantities and at such times to assure continuity of installation. Products to be packaged to protect the finish during transport. Precast may be a long lead time item and should be ordered accordingly.

PART 2 - PRODUCTS

REINFORCING MATERIALS

1. Epoxy coated rebar used in some product designs to insure safe handling.
2. Corrugated Wall Ties - Included in moldings as the mechanical fastener. 22 gauge mill galvanized steel - 7/8" x 7".
3. Threaded Inserts - Plastic inserts are included in very large castings such as large moldings, columns and stackable column components. These are for mechanical ties and not for lifting purposes.
4. Adhesives - Latex - modified mortar used on a stable substrate in conjunction with the mechanical fastener should be used. White cement can be used to adjust the greenish color created by using the latex mortar.
5. Premium grade construction adhesives which come in tubes should be used for bonding columns and on flat surfaces where latex mortar cannot be used.

CONCRETE MATERIALS

1. Portland Cement: Type 1 Portland Cement Gray or Lehigh White
2. Use only one brand, type and source of supply of cement throughout the project, unless otherwise acceptable to Architect.
3. Coarse/Fine Aggregate - Sand and Gravel: Hard, durable, selected and graded; free of material that causes staining or reacting with cement.
4. Pigments: Non-fading, resistant to lime and other alkalis.
5. Water: Drinkable, free from foreign materials in amounts harmful to concrete and embedded steel.
6. Air-Entraining Admixture: Utilize standard mix designs incorporating admixtures which facilitate the workability, curing and strength of the mix.
7. Compressive Strength: 5000 psi minimum at 28 days.

FABRICATION

1. General: Fabricate precast concrete units complying with manufacturing and testing procedures, quality control recommendations, and following dimensional tolerances, unless otherwise indicated.
2. Molds: Accurately construct molds mortar-tight and of sufficient strength to withstand pressures due to concrete placing operations and temperature changes. Maintain mold work to provide completed precast concrete units of shapes, lines and dimensions indicated, within specified fabrication tolerances.

DIVISION 4 - MASONRY

4200: CONCRETE UNIT MASONRY

1. GENERAL REQUIREMENTS

A. **Concrete Unit Masonry specified by the Structural Engineer shall supersedes these specifications if part of this construction document package. They will be shown on the drawings prepared by the Structural Engineer.**

B. Scope

The scope of this section includes all labor, material and equipment necessary to complete all work specified herein and as indicated on the plans. This section includes, but is not limited to, all masonry units, grout and mortar and steel reinforcement necessary to construct the masonry walls and other masonry structures as shown on plans. It shall include the placing of reinforcing steel in the cells in accordance with the plans and specifications of the project. This work shall be properly coordinated with that of the other trades.

C. Special Requirements

All work and material shall be performed in accordance to the requirements of the California Building Code (C B C) Chapter 21 & 21a. All work performed under this section shall be performed by a State of California licensed contractor.

2. MATERIALS

QUALITY ASSURANCE

A. Certification - the concrete block manufacturer shall certify that the masonry units furnished meet or exceed the requirements of the specification.
B. Concrete masonry Units shall be tested in accordance with ASTM C-1314 and CBC Section 2105
C. Mortar shall be tested in accordance with CBC Section 2103.8
D. Grout shall be tested in accordance with CBC Section 2103.12
E. Deformed reinforcing bars shall be accordance CBC Section 2103.13.1
F. Field test for mortar and grout with CBC Section 2105.3

CONCRETE MASONRY UNITS

A. Hollow load bearing masonry units shall conform to ASTM C 90, Type 1.
B. Masonry units shall be:
   -precision gray block or as indicated on plans
   -see drawing for additional notes or unit types
C. Concrete masonry shall be medium weight units.
D. All masonry units shall be sound, free of cracks or other defects that would interfere with the proper placing of the unit or impair the strength of construction. Minor cracks incidental to the usual method of manufacturer, or minor chipping resulting from customary methods of handling and shipping and delivery shall not be deemed grounds for rejection.

MORTAR - Mortar shall be Type S and shall conform to ASTM C-270. Mortar shall be freshly prepared and uniformly mixed and have a minimum strength of 1,800 PSI in 28 days, per CBC table 2103.8 (2), unless noted otherwise on plans.

CEMENT - Cement shall be Type I or II Portland Cement conforming to CBC Section 1903.

AGGREGATE

A. All aggregate for mortar and grout shall be sharp, clean, well graded and free of injurious amounts of dust, lumps, shale, alkali, surface coatings, and organic matter.
B. Aggregate for mortar shall conform to ASTM C-144.

Admixtures - The use of admixtures shall not be permitted in mortar or grout unless approved by the Engineer or Architect. In high lift grouting, the use of an admixture to counteract water loss and volume reduction shall be used.

Water - Water shall be free of deleterious quantities of acids, alkalis, and organic materials and shall come from a domestic supply.

Reinforcing Steel

A. All #5 bars and larger to be ASTM A-615, Grade 60. Lap 30 inches.
   All #2 through #4 bars to be ASTM A-615, Grade 40. Lap 20 inches.
B. Reinforcement shall be clean and free from loose rust, scale, and dirt and from any coatings that would reduce bond.

3. PERFORMANCE OF WORK

A. Masonry shall not be started when the horizontal and vertical alignment of the foundation is out of plumb or line one inch or more per ten feet.
B. Care shall be taken to prevent grout stains. Keep wall continually clean; if grout does run over, clean immediately.
C. All masonry shall be laid true, level and plumb in accordance with the drawings.
D. The masonry units shall be cut accurately to fit all plumbing, ducts, openings, electrical work, etc., and all holes are to be neatly patched.
E. No construction support shall be attached to the wall except where specifically permitted by the Architect of Engineer.
F. The top surface of the concrete foundation shall be clean and free and the aggregate exposed before starting masonry construction.
G. The wall shall be laid up in straight uniform courses with regular half running bond. Unless otherwise noted all mortar joints shall be finished with a concave joint.
H. All chips 1/4" or more shall be tuck-pointed.

Masonry Units

A. All masonry units should be stored on the job site so that they are kept off the ground and protected from dirt.
B. Proper masonry units shall be used to provide for all windows, doors, bond beams, lintels, pilasters, etc., with a minimum of unit cutting.
C. Where masonry unit cutting is necessary, all cuts shall be neat and true, and made by a masonry saw.

Reinforcing

A. When a foundation dowel does not line up with a vertical core, the dowel shall be sloped at not more than one horizontal to six vertical. Dowels shall be grouted into a core in vertical alignment even if in an adjacent cell to the vertical wall reinforcing.
B. Reinforcing bars shall be straight except for bends around corners and where bends or hooks are detailed on the plans.
C. Reinforcing steel, where spliced, shall be lapped a minimum of 40 bar diameters.
D. When full-length vertical bars are used, they shall be held in position at the top and bottom at intervals not to exceed 192 bar diameters of the reinforcement.
E. Horizontal reinforcing shall be laid on the webs of bond beams units and shall be solidly grouted in place. Reinforcing in channel units shall be spaced off the bottom of the unit.
F. Vertical reinforcing shall have a minimum clearance of 1/4 inch from the masonry.

Grouting

A. General

1. Reinforcement shall be in place before grouting starts.
2. All grout shall be puddled or vibrated in place.
3. Vertical cells to be filled shall have vertical alignment to maintain a continuous unobstructed cell area not less than two inches by three inches.
4. Cells containing reinforcement shall be filled solid with grout in a single operation. Grouting involving two or more grout pours shall be stopped one inch below the top of a block coarse to form a key or joint. Grouting of beams over openings shall be done in one continuous operation.
5. The tops of un-grouted cells under a horizontal masonry beam shall be covered with grout stops or other approved materials to confine the grout fill to the beam section.
6. All cells containing reinforcement, anchor bolts and inserts shall be grouted solid. Walls that are to be fully grouted are indicated on structural drawings.
7. Spaces around metal door frames and other built-in items shall be filled solid with grout or mortar.
8. Columns, beams, joists, and similar structural members shall be anchored to the wall with anchor bolts or their equivalent. Anchors shall be fully, solidly embedded in place. Embedment shall not be less than 2/3 of the wall thickness unless otherwise noted.

B. Low Lift Grouting

1. In low lift grouting of hollow unit masonry the structure shall be grouted in lifts of four feet or less. Grout shall be puddled to insure consolidation and full penetration around steel. See CBC Section 2104.A.6.1.1.2

C. High Lift Grouting

1. Clean out holes are required, per CBC Section 2104A.6.1.1.3.
2. All grout shall be consolidated at time of pouring by puddling or vibrating and then shall be re-consolidated later by puddling before the plasticity is lost.
3. The minimum dimension of the grout space shall be three an one half inches.
4. Grout shall be poured in not more than four foot depths, wait approximately one-half hour and then pour another four foot depth. The full depth of each section of a wall shall be poured in one day.
5. All reinforcing steel shall be in place before grouting.

04430 SIMULATED STONE VENEER

1. Supply and install simulated stone veneer as shown on the drawings. Erect field samples as instructed by the Architect or Owner.
2. Installation shall be as an adhered veneer in conformance with CBC Section 1405.9, the manufacturers written installation instructions and the referenced I.C.B.O. evaluation report.

DIVISION 5-METALS

05100 STRUCTURAL STEEL

1. GENERAL REQUIREMENTS

A. Scope

1. **Structural Steel specified by the Structural Engineer shall supersede these specifications if part of this construction document package. They will be shown on the drawings prepared by the Structural Engineer.**
2. The scope of this section includes all labor, material and equipment necessary to complete all work specified herein and as indicated on the plans. This section includes performing all operations necessary to complete all metal fabrication work including but not limited to railings, posts, angles, clips, ties, straps, tubes, bolts, anchors, welding, grinding, and shop priming.

B. Special Requirements

1. All work performed under this section shall be performed in accordance the C.B.C. Chapter 22 and 22 a
2. All work performed under this section shall be performed by a State of California licensed contractor.
3. Supply and install structural steel as specified in drawings, Conform to additional requirements of the structural drawings and to applicable positions of American Institute of Steel Construction (AISC), Chicago IL, codes and manuals of American Welding Society (AWS).
4. Submit shop drawings fully detailing work of this section, including accessories, welding, connections, including minor connections not shown but necessary for complete installation. If conflict occurs between these specifications and the structural plans or specs, refer to the structural plans or specs and bring to the Architect's attention.

C. Welding

1. All shop welding shall comply with specifications of the "American Welding Society".
2. Ornamental railing, etc. shall have all welds ground smooth. No finishing treatment is required for concealed welds.
3. All work shall be done by A.W.S. certified licensed welders approved by the local building department. Welding shall be in accordance with the provisions of the Structural Welding Code AWS D1-1 and AWS D1-4 as modified by referenced AISC Standards, and as indicated or noted on Drawings.
4. Special inspection required for all structural field welding, by a certified special inspection service.
5. Grind exposed welds subject to contract with smooth surfaces, free of holes, slag, or other defects, flush with adjoining surfaces.

2. MATERIALS

A. Structural Metal Parts and Members shall conform to the following:

1. Structural steel rolled shapes, plates and bars shall be ASTM A-36 unless otherwise noted.
2. Steel pipe used for structural purposes shall be ASTM A-36
3. Square & rectangular structural steel tubing (TS) shall be ASTM A36, ASTM A-500 grade B, or A501.
4. Machine bolts and anchor bolts shall conform to ASTM A-307, grade A. High strength (HS) bolts shall conform to ASTM A-325, field inspection require for installation.
5. Aluminum: ASTM B209, B221, AND B429, Alloy 6063-T5.
6. Stainless Steel: ASTM A176, Type 303,304 or 306, with No. 4 satin finish unless otherwise shown.
7. Miscellaneous Items: Fabricate items not specifically mentioned according to the drawings, approved shop drawings and as required to complete the entire work. Galvanize exterior items and shop prime interior items unless otherwise shown or specified.
8. See drawings for other material that would fall under this section.

FIELD COPY

3. PERFORMANCE OF WORK

A. Fabrication, materials, and workmanship shall conform to AISC Specifications for the Design, Fabrication and Erection of Structural Steel for Buildings, Manual Of Steel Construction, Latest Edition.
B. Miscellaneous steel parts are to be accurately fabricated as shown on plans. Cut, drill and tap to receive hardware as required.
C. Fasteners: Provide fasteners and connectors of approved types as required for the installation, whether or not indicated. Provide galvanized fasteners for galvanized items and for exterior use.
D. Installation shall conform to drawings, approved submittals and requirements herein. Obtain necessary templates and information to provide all holes and drilling indicated or required for fasteners. Protect aluminum from contact with dissimilar metals or with concrete or cement plaster by painting the contact surfaces of each with two heavy coats of bituminous suitable isolation gaskets, as applicable for each condition.
E. Grouting: Provide non-shrink grouting for Work of this section as shown and required. Conform to manufacturer's directions.
F. Painting & Priming - After fabrication all items shall be fully coated with two coats of a steel shop primer paint of different colors. Lead-free red metal primer, zinc chromate or alkyd type. Items permanently exposed to weather shall be fully primed and coated per specifications.
G. Shop priming: Clean surfaces according to AISC Specifications. Apply shop coat of metal primer to minimum 1.0 mil dry film thickness. Work primer into joints. Do not prime galvanized items or items imbedded in concrete or masonry. Shop prime all ferrous items not to be galvanized unless otherwise indicated or specified.

TECHNE

DESIGN | DEVELOPMENT

3956 30th Street, San Diego, CA 92104
techne-us.com sustainablearchitect.org
o 619-940-5814 m 313-595-5814

CONSULTANTS

LICENSED ARCHITECT MICHAEL RENE MORTON
C-19371
REN. 04/30/2015
STATE OF CALIFORNIA

414 29th Avenue
Oakland, CA 94601

OWNER

29th Avenue Group, LLC
1211 Embarcadero Way, Suite D
Oakland, CA 94606

BuildZig
Dream it. Build it. Zig it.

MARK	DATE	DESCRIPTION
01	11.10.14	1st Building Permit Submittal
02	02.23.15	2nd Building Permit Submittal

2/22/2015 6:02:57 PM

PROJECT NO: 1410

CAD DWG FILE: G001 COVER SHEET.DWG

DRAWN BY: A.S, M.M., J.C., J.S.

CHK'D BY: A.S., M.M

COPYRIGHT: TECHNE expressly reserves its common law copyright and other property rights in this document. This document shall not be reproduced, copied, changed or disclosed in any form or manner whatsoever without first obtaining the express written consent of TECHNE.

SHEET TITLE

GENERAL CONDITIONS / SPECIFICATIONS

G003

SECTION 054000 - COLD-FORMED METAL FRAMING

PART 1 - GENERAL

1.1 RELATED DOCUMENTS

A. Drawings and general provisions of the Contract, including General and Supplementary Conditions and Division 1 Specification Sections, apply to this Section.

1.2 SUMMARY

A. This Section includes the following:
1. Exterior load-bearing wall framing.
2. Interior load-bearing wall framing.
3. Exterior non-load-bearing wall framing.

B. Related Sections include the following:
1. Division 5 Section "Metal Fabrications" for masonry shelf angles and connections.
2. Division 9 Section "Non-Structural Metal Faming" for interior non-structural metal stud framing and ceiling-suspension assemblies.

1.3 PERFORMANCE REQUIREMENTS

A. Structural Performance: Provide cold-formed metal
B. capable of withstanding design loads within limits and under conditions indicated.
1. Design Loads: As indicated on the Plans
a. Building Code Requirements: 2007 CBC
2. Deflection Limits: Design framing systems to withstand design loads without deflections greater than the following:
a. Exterior Load-Bearing Wall Framing: Horizontal deflection of 1/360 of the wall height.
b. Interior Load-Bearing Wall Framing: Horizontal deflection of 1/360 of the wall height under a horizontal load of 5 lbs/sq. ft.
c. Exterior Non-Load-Bearing Framing: Horizontal deflection of 1/360 of the wall height.
3. Design framing systems to provide for movement of framing members without damage or overstressing, sheathing failure, connection failure, undue strain on fasteners and anchors, or other detrimental effects when subject to a maximum ambient temperature change of 120 deg F.
4. Design framing system to maintain clearances at openings, to allow for construction tolerances, and to accommodate live load deflection of primary building structure as follows:
a. Upward and downward movement of 1/2 inch

C. Cold-Formed Steel Framing, General: Design according to AISI's "North American Specification for the Design of Cold-Formed Steel Structural Members"
1. Design exterior non-structural wall framing to accommodate horizontal deflection without regard for contribution of sheathing materials.

1.4 SUBMITTALS

A. Product Data: For each type of cold-formed metal framing, product and accessory indicated.
B. Shop Drawings: Provide shop drawings prepared by cold-formed metal framing manufacturer. Show layout, spacing's, sizes, thicknesses, and types of cold-formed metal framing; fabrication; and fastening and anchorage details, including mechanical fasteners. Show reinforcing channels, opening framing, supplemental framing, strapping, bracing, bridging, splices, accessories, connection details, and attachment to adjoining work.
1. For cold-formed metal framing indicated to comply with design loads, include structural analysis data signed and sealed by the qualified professional engineer, registered in the state of California responsible for their preparation.
C. Welding certificates.
D. Qualification Data: ICC-ES evaluation reports.
E. Product Test Reports: From a qualified testing agency, unless otherwise stated, indicating that each of the following complies with requirements, based on evaluation of comprehensive tests for current products.
1. Steel sheet.
2. Expansion anchors.
3. Power-actuated anchors.
4. Mechanical fasteners.
5. Vertical deflection clips.
6. Horizontal drift deflection clips
7. Miscellaneous structural clips and accessories.
F. Research/Evaluation Reports: For cold-formed metal framing.

1.5 QUALITY ASSURANCE

A. Engineering Responsibility: Preparation of Shop Drawings, design calculations, and other structural data by a qualified professional engineer.
B. Testing Agency Qualifications: An independent testing agency, acceptable to authorities having jurisdiction, qualified according to ASTM E 329 to conduct the testing indicated.
C. Product Tests: Mill certificates or data from a qualified independent testing agency, or in-house testing with calibrated test equipment indicating steel sheet complies with requirements, including base-metal thickness, yield strength, tensile strength, total elongation, chemical requirements, ductility, and metallic-coating thickness.
D. Welding: Qualify procedures and personnel according to AWS D1.1/D1.1M, "Structural Welding Code--Steel," and AWS D1.3, "Structural Welding Code-Sheet Steel."
E. Fire-Test-Response Characteristics: Where indicated, provide cold-formed metal framing identical to that of assemblies tested for fire resistance per ASTM E 119 by a testing and inspecting agency acceptable to authorities having jurisdiction. Products used in the assembly shall carry a classification label from a testing laboratory acceptable to authority having jurisdiction.
F. AISI Specifications and Standards: Comply with AISI's "North American Specification for the Design of Cold-Formed Steel Structural Members" and it's "Standard for Cold-Formed Steel Framing - General Provisions."
1. Comply with AISI's "Standard for Cold-Formed Steel Framing - Header Design."
G. Pre-Installation Conference: Conduct conference at Project site to comply with requirements in Division 1 Section "Project Management and Coordination."

1.6 DELIVERY, STORAGE, AND HANDLING

A. Protect cold-formed metal framing from corrosion, deformation, and other damage during delivery, storage, and handling per requirements of AISI's "Code of Standard Practice".

PART 2 - PRODUCTS

2.1 MANUFACTURERS

A. Basis-of-Design Product: Subject to compliance with requirements, provide cold-form metal framing products manufactured by Dietrich Metal Framing specified in other Part 2 articles, or comparable products by one of the following:
1. Members in good standing of Steel Stud Manufacturer's Association (SSMA)
2. Or Manufacturer listed on plans

2.2 MATERIALS

A. Steel Sheet: ASTM A 1003/A 1003M, Metallic coated, of grade and coating weight as follows:
1. Grade: as indicated on the plans.
2. Coating: G60 (Z180), A60 (ZF180), AZ50 (AZ150), or GF30 (ZGF90)] [G90 (Z275) or equivalent.
B. Steel Sheet for Vertical Deflection, Drift Clips: ASTM A 1003/A1003 M, structural steel, zinc coated, of grade and coating as follows:
1. Grade: 50 (340), Class 1 or 2 and As required by structural performance.
2. Coating: G90 (Z275).

2.3 LOAD-BEARING WALL FRAMING

A. Steel Studs: Manufacturer's standard C-shaped steel studs, of web depths indicated, punched, with stiffened flanges, and as follows:
1. Basis-of-Design Product: Dietrich Metal Framing; [CWN] [CSJ] [CSW] [CSE].
2. Minimum Base-Metal Thickness: 0.0329 inch (20 Gauge) or As indicated on plans
3. Flange Width: 2 inches or As indicated on plans
4. Section Properties: See Structural plans
B. Steel Track: Manufacturer's standard U-shaped steel track, of web depths indicated, unpunched, with straight flanges, and as follows:
1. Minimum Base-Metal Thickness: 0.0329 inch (20 Gauge) and Matching steel studs.
2. Flange Width: 1-1/4 inches
C. Headers and Jambs - Heavy-Duty Stud: Manufacturer's proprietary shape used to form header beams and jambs, columns or posts, of web depths indicated, unpunched, with stiffened flanges and as follows:
1. Basis-of-Design Product: Dietrich Metal Framing; Heavy Duty Stud (HDS) and Header Bracket (HDSC) or equal.
2. Minimum Base-Metal Thickness: 0.0329 inch (20 Gauge) and Matching steel studs.
3. Web and Flange Widths, Type HDSC: 3-1/2 by 3-1/16 by 2 inches or 5-7/8 by 3-1/16 by 2 inches.
D. Steel Box or Back-to-Back Headers: Manufacturer's standard C-shapes used to form header beams, of web depths indicated, punched, with stiffened flanges, and as follows:
1. Minimum Base-Metal Thickness: 0.0329 inch (20 Gauge) and Matching steel studs.
2. Flange Width: 1-5/8 inches or as indicated on plans
3. Section Properties: Per Structural Engineers calculation requirements.
E. Steel Double-L Headers: Manufacturer's standard L-shapes used to form header beams, of web depths indicated, and as follows:
1. Minimum Base-Metal Thickness: 0.0329 inch (20 Gauge)
2. Top Flange Width: 1-5/8 inches or as indicated on plans
3. Vertical leg length: 6 inches or 8 inches or10 inches or as indicated on plans
4. Section Properties: Per Structural Engineers calculation requirements.

2.4 EXTERIOR NON-LOAD-BEARING WALL FRAMING

A. Steel Studs: Manufacturer's standard C-shaped steel studs, of web depths indicated, punched, with stiffened flanges, and as follows:
1. Basis-of-Design Product: Dietrich Metal Framing; [CWN] [CSJ] [CSW] [CSE].
2. Minimum Base-Metal Thickness: 0.0329 inch (20 Gauge) or as indicated on plans.
3. Flange Width: 1-5/8 inches or as indicated on plans
4. Section Properties: Per Structural Engineers calculation requirements.
B. Steel Track: Manufacturer's standard U-shaped steel track, of web depths indicated, unpunched, with un-stiffened flanges, and as follows:
1. Minimum Base-Metal Thickness: 0.0329 inch (20 Gauge) or as indicated on plan, Matching steel studs.
2. Flange Width: 1-1/4 inches or as indicated on plans.
C. Headers and Jambs - Heavy-Duty Stud: Manufacturer's proprietary shape used to form header beams and jambs, columns or posts, of web depths indicated, unpunched, with stiffened flanges and as follows:
1. Basis-of-Design Product: Dietrich Metal Framing; HDSC Header Bracket or Equal.
2. Minimum Base-Metal Thickness: 0.0329 inch (20 Gauge) or Matching steel studs.
3. Web and Flange Widths, Type HDSC: 3-1/2 by 3-1/16 by 2 inches or 5-7/8 by 3-1/16 by 2 inches or as indicated on plans.
D. Vertical Deflection Clips: Manufacturer's standard head clips, capable of accommodating upward and downward vertical displacement of primary structure through positive mechanical attachment to stud web.
1. Basis-of-Design Product: Dietrich Metal Framing; [FCSC] [FS12] [FS1S] [FS24] [QC] [SD], or a comparable product by one of the following:
a. MarinoWare, a division of Ware Industries.
b. SCAFCO Corporation
c. The Steel Network, Inc.
d. Or Architect approved manufacturer's name.
2. Minimum Base-Metal Thickness: Fast Clip Slide Clip; 0.0677 inch, or Fast Strut Clip; 0.0677 inch, or Quick Clip; 0.1180 inch, or Slide Clip; 0.0677 inch.
E. Slotted Deflection Track: Manufacturer's single, deep-leg, U-shaped steel track; punched with vertical slots in both legs. Studs should be positively attached to deep-leg track using vertical slots while allowing free vertical movement. With legs designed to support horizontal and lateral loads and transfer them to the primary structure, as follows:
1. Basis-of-Design Product: Dietrich Metal Framing; SLP-TRK® slotted deflection track.
2. Standard Leg: 2-1/2 inches.
3. Standard Vertical Slot in Leg: 1-1/2 inches .
4. Minimum Yield Strength and Thickness: 50 ksi; 0.0538 inch.
F. Single Deflection Track: Manufacturer's single, deep-leg, U-shaped steel track; unpunched, with un-stiffened flanges, of web depth to contain studs while allowing free vertical movement, with flanges designed to support horizontal and lateral loads and transfer them to the primary structure. Install a continuous row of bridging, composed of 1-1/2 inch u-channel secured to each stud with clip angle or Spazzer® 5400, at upper-most knockout, not more than 12 inches from top of wall.
1. Available Manufacturers: Subject to compliance with requirements, manufacturers offering products that may be incorporated into the Work include, but are not limited to, the following:
2. Manufacturers: Subject to compliance with requirements, provide products by one of the following:
a. Dietrich Metal Framing, a Worthington Industries Company
b. Or Architect approved alternate manufacturer.
3. Minimum Base-Metal Thickness: 0.0428 inch or as indicated on plans.
4. Flange Width: 1 inch plus the design gap for 1-story structures and1 inch plus twice the design gap for other applications or as indicated on plans.
G. U-Channel: Manufacturer's standard length.
1. Size: 1-1/2 inches.
2. Minimum Base-Metal Thickness: 0.0538 inch .
H. Bridging and Spacer Bar:
1. Basis-of Design-Product: Dietrich Metal Framing; Trade Ready® Spazzer® 5400 (SPZS).
2. Minimum Base-Metal Thickness: 0.0538 inch.
3. Size: 1-1/4 by 1-1/4 by 50 inches long, pre-notched at 12, 16 and 24 inches centers.
I. Double Deflection Tracks: Manufacturer's double, deep-leg, U-shaped steel tracks, consisting of nested inner and outer tracks; unpunched, with un-stiffened flanges.
1. Outer Track: Of web depth to allow free vertical movement of inner track, with flanges designed to support horizontal and lateral loads and transfer them to the primary structure, and as follows:
a. Minimum Base-Metal Thickness: 0.0428 inch or as indicated on plans.
b. Flange Width: 1 inch plus the design gap for 1-story structures and1 inch plus twice the design gap for other applications or as indicated on plans.
2. Inner Track: Of web depth indicated, and as follows:
a. Minimum Base-Metal Thickness: 0.0428 inch or 0.0538 inch or as indicated on plans.
b. Flange Width: equal to sum of outer deflection track flange width plus 1 inch.
J. Drift Clips: Manufacturer's standard bypass or head clips, capable of isolating wall stud from upward and downward vertical displacement and lateral drift of primary structure.

2.5 FRAMING ACCESSORIES

A. Fabricate steel-framing accessories from steel sheet, ASTM A 1003/A 1003M, Structural Grade, Type H or Type L, metallic coated, of same grade and coating weight used for framing members.
B. Provide accessories of manufacturer's standard thickness and configuration, unless otherwise indicated, as follows:
1. Supplementary framing.
2. Bracing, bridging, and solid blocking.
a. Basis-of-Design Product: Dietrich Metal Framing; Spazzer® 5400 Bridging Bar (SPZS)Spazzer® Bar Guard (SPBG)or approved equal.
3. Web stiffeners.
a. Basis-of-Design Product: Dietrich Metal Framing; WS orWS2P.
4. Anchor clips.
5. End clips.
6. Foundation clips.
7. Gusset plates.
8. Stud kickers, knee braces, and girts.
9. Joist hangers and end closures.
10. Hole reinforcing plates.
11. Backer plates.
a. Basis-of-Design Product: Dietrich Metal Framing; Danback Wood Backing Plate D16F or D24F.

2.6 ANCHORS, CLIPS, AND FASTENERS

A. Steel Shapes and Clips: ASTM A 36/A 36M, zinc coated by hot-dip process according to ASTM A 123/A 123M.
B. Anchor Bolts: ASTM F 1554, Grade 36 or 55, threaded carbon-steel, hex-headed boltsand carbon-steel nuts; and flat, hardened-steel washers; zinc coated by hot-dip process according to ASTM A 153/A 153M, Class Cmechanically deposition according to ASTM B 695, Class 50
C. Expansion Anchors: Fabricated from corrosion-resistant materials, with capability to sustain, without failure, a load equal to 5 times design load, as determined by testing per ASTM E 488 conducted by a qualified independent testing agency.
D. Power-Actuated Anchors: Fastener system of type suitable for application indicated, fabricated from corrosion-resistant materials, with capability to sustain, without failure, a load equal to 10 times design load, as determined by testing per ASTM E 1190 conducted by a qualified independent testing agency.
E. Mechanical Fasteners: ASTM C 1513, corrosion-resistant-coated, self-drilling, self-tapping steel drill screws.
1. Head Type: Low-profile head beneath sheathing, manufacturer's standard elsewhere.
F. Welding Electrodes: Comply with AWS standards.

2.7 MISCELLANEOUS MATERIALS

A. Galvanizing Repair Paint: SSPC-Paint 20 or DOD-P-21035 ASTM A 780.
B. Cement Grout: Portland cement, ASTM C 150, Type I; and clean, natural sand, ASTM C 404. Mix at ratio of 1 part cement to 2-1/2 parts sand, by volume, with minimum water required for placement and hydration.
C. Nonmetallic, Non-shrink Grout: Premixed, nonmetallic, noncorrosive, no staining grout containing selected silica sands, Portland cement, shrinkage-compensating agents, and plasticizing and water-reducing agents, complying with ASTM C 1107, with fluid consistency and 30-minute working time.
D. Shims: Load bearing, high-density multimonomer plastic, non-leaching.
E. Sealer Gaskets: Closed-cell neoprene foam, 1/4 inch thick, selected from manufacturer's standard widths to match width of bottom track or rim track members.

2.8 FABRICATION

A. Fabricate cold-formed metal framing and accessories plumb, square, and true to line, and with connections securely fastened, according to referenced AISI's specifications and standards, manufacturer's written instructions, and requirements in this Section.
1. Fabricate framing assemblies using jigs or templates.
2. Cut framing members by sawing or shearing; do not torch cut.
3. Fasten cold-formed metal framing members by welding, screw fastening; clinch fastening, or riveting as standard with fabricator. Wire tying of framing members is not permitted.
a. Comply with AWS D1.3 requirements and procedures for welding, appearance and quality of welds, and methods used in correcting welding work.
b. Locate mechanical fasteners and install according to Shop Drawings, with screw penetrating joined members by not less than three exposed screw threads.
4. Fasten other materials to cold-formed metal framing by welding, bolting, or screw fastening, according to Shop Drawings.
B. Reinforce, stiffen, and brace framing assemblies to withstand handling, delivery, and erection stresses. Lift fabricated assemblies to prevent damage or permanent distortion.
C. Fabrication Tolerances: Fabricate assemblies level, plumb, and true to line to a maximum allowable tolerance variation of 1/8 inch in 10 feet (1:960) and as follows:
1. Spacing: Space individual framing members no more than plus or minus 1/8 inch from plan location. Cumulative error shall not exceed minimum fastening requirements of sheathing or other finishing materials.
2. Squareness: Fabricate each cold-formed metal framing assembly to a maximum out-of-square tolerance of 1/8 inch.

PART 3 - EXECUTION

3.1 EXAMINATION

A. Examine supporting substrates and abutting structural framing for compliance with requirements for installation tolerances and other conditions affecting performance.
1. Proceed with installation only after unsatisfactory conditions have been corrected.

3.2 PREPARATION

A. Install load bearing shims or grout between the underside of wall bottom track or rim track and the top of foundation wall or slab at stud or joist locations to ensure a uniform bearing surface on supporting concrete or masonry construction.
B. Install sealer gaskets to isolate the underside of wall bottom track or rim track and the top of foundation wall or slab at stud or joist locations.

3.3 INSTALLATION, GENERAL

A. Cold-formed metal framing may be shop or field fabricated for installation, or it may be field assembled.
B. Install cold-formed metal framing according to AISI's "Standard for Cold-Formed Steel Framing - General Provisions" and to manufacturer's written instructions unless more stringent requirements are indicated.
C. Install shop- or field-fabricated, cold-formed framing and securely anchor to supporting structure.
1. Screw, bolt, or weld wall panels at horizontal and vertical junctures to produce flush, even, true-to-line joints with maximum variation in plane and true position between fabricated panels not exceeding 1/16 inch.
D. Install cold-formed metal framing and accessories plumb, square, and true to line, and with connections securely fastened.
1. Cut framing members by sawing or shearing; do not torch cut.
2. Fasten cold-formed metal framing members by welding, screw fastening, clinch fastening, or riveting. Wire tying of framing members is not permitted.
a. Comply with AWS D1.3 requirements and procedures for welding, appearance and quality of welds, and methods used in correcting welding work.
b. Locate mechanical fasteners and install according to Shop Drawings, and complying with requirements for spacing, edge distances, and screw penetration.
E. Install framing members in one-piece lengths unless splice connections are indicated for track or tension members.
F. Install temporary bracing and supports to secure framing and support loads comparable in intensity to those for which structure was designed. Maintain braces and supports in place, undisturbed, until entire integrated supporting structure has been completed and permanent connections to framing are secured.
G. Do not bridge building expansion and control joints with cold-formed metal framing. Independently frame both sides of joints.
H. Erection Tolerances: Install cold-formed metal framing level, plumb, and true to line to a maximum allowable tolerance variation of 1/8 inch in 10 feet (1:960) and as follows:
1. Space individual framing members no more than plus or minus 1/8 inch from plan location. Cumulative error shall not exceed minimum fastening requirements of sheathing or other finishing materials.

3.4 LOAD-BEARING WALL INSTALLATION

A. Install continuous top and bottom tracks sized to match studs unless approved design is more stringent. Align tracks accurately and securely anchor at corners and ends, and at spacing's as follows:
1. Anchor Spacing: 24 inches or As shown on Structural Drawings
B. Squarely seat studs against top and bottom tracks with gap not exceeding of 1/8 inch between the end of wall framing member and the web of track. Fasten both flanges of studs to top and bottom tracks. Space studs as follows:
1. Stud Spacing: 16 inches or As indicated on plans.
C. Set studs plumb, except as needed for diagonal bracing or required for non-plumb walls or warped surfaces and similar configurations.
D. Align studs vertically where floor framing interrupts wall-framing continuity. Where studs cannot be aligned, continuously reinforce track to transfer loads.
E. Align floor and roof framing over studs. Where framing cannot be aligned, continuously reinforce track to transfer loads.
F. Anchor studs abutting structural columns or walls, including masonry walls, to supporting structure as indicated.
G. Install headers over wall openings wider than stud spacing. Locate headers above openings as indicated. Fabricate headers of compound shapes Dietrich Metal Framing Heavy Duty Stud (HDS) componentsindicated or required to transfer load to supporting studs, complete with clip-angle connectors, web stiffeners, or gusset plates.
1. Frame wall openings with not less than a double stud at each jamb of frame or as indicated on Shop Drawings. Fasten jamb members together to uniformly distribute loads.
2. Install runner tracks and jack studs above and below wall openings. Anchor tracks to jamb studs with clip angles or by welding, and space jack studs same as full-height wall studs.
H. Install supplementary framing, blocking, and bracing Dietrich Metal Framing Danback Wood Backing Plateor equal in stud framing indicated to support fixtures, equipment, services, casework, heavy trim, furnishings, and similar work requiring attachment to framing.
1. If type of supplementary support is not indicated, comply with stud manufacturer's written recommendations and industry standards in each case, considering weight or load resulting from item supported.
I. Install horizontal bridging in stud system, spaced 48 inches as indicated on Drawings Fasten at each stud intersection.
1. Bridging: Steel channel, welded or mechanically fastened to webs of punched studs with a minimum of 2 screws into each flange of the clip angle Dietrich Metal Framing proprietary U-Series Clip Anglefor framing members up to 6 inches deep.
2. Bridging: Combination of flat, taut, steel sheet straps of width and thickness indicated and stud-track solid blocking of width and thickness to match studs. Fasten flat straps to stud flanges and secure solid blocking to stud webs or flanges.
3. Bridging: Proprietary Dietrich Metal Framing Spazzer® 5400bridging bars installed according to manufacturer's written instructions.
J. If required by design, install steel sheet diagonal bracing straps to both stud flanges, terminate at and fasten to reinforced top and bottom tracks. Fasten clip-angle connectors to multiple studs at ends of bracing and anchor to structure.
K. Install miscellaneous framing and connections, including supplementary framing, web stiffeners, clip angles, continuous angles, anchors, and fasteners, to provide a complete and stable wall-framing system.

3.5 EXTERIOR NON-LOAD-BEARING WALL INSTALLATION

A. Install continuous tracks sized to match studs unless approved design is more stringent. Align tracks accurately and securely anchor to supporting structure as indicated.
B. Fasten both flanges of studs to top and bottom track, unless otherwise indicated. Space studs as follows:
1. Stud Spacing: 16 inches or 24 inches As indicated on plans.
C. Set studs plumb, except as needed for diagonal bracing or required for non-plumb walls or warped surfaces and similar requirements.
D. Isolate non-load-bearing steel framing from building structure to prevent transfer of vertical loads while providing lateral support.
1. Install single-leg deflection tracks Dietrich Metal Framing SLP-TRK Slotted Slip Trackand anchor to building structure.
2. Install double deep-leg deflection tracks and anchor outer track to building structure.
3. Connect Dietrich Metal Framing proprietary Fast Clip Slide Clip (FCSC)Fast Strut Clip (FS), Quick Clip (QC), Slide Clip (SC) vertical deflection clips to bypassing studs and anchor to building structure.
4. Connect drift clips to cold formed metal framing and anchor to building structure.
E. Install horizontal bridging in wall studs, spaced in rows indicated on Shop Drawings but not more than 48 inches apart. Fasten at each stud intersection.
1. Top Bridging for Single Deflection Track: Install row of horizontal bridgingDietrich Metal Framing proprietary Spazzer® 5400 Bridging Bar or Equal within 12 inches of single deflection track. Bridging is not required in top row when using Dietrich Metal Framing's proprietary slotted deflection track (SLP-TRK®) Install a combination of flat, taut, steel sheet straps of width and thickness indicated and stud or stud-track solid blocking of width and thickness matching studs. Fasten flat straps to stud flanges and secure solid blocking to stud webs or flanges.
a. Install solid blocking at 96-inch centers or indicated on Drawings
2. Bridging: Steel channel, welded or mechanically fastened to webs of punched studs.
3. Bridging: Combination of flat, taut, steel sheet straps of width and thickness indicated and stud-track solid blocking of width and thickness to match studs. Fasten flat straps to stud flanges and secure solid blocking to stud webs or flanges.
4. Bridging: Dietrich Metal Framing proprietary Spazzer® 5400 Bridging Bar or Equalnstalled according to manufacturer's written instructions.
F. Install miscellaneous framing and connections, including stud kickers, web stiffeners, clip angles, continuous angles, anchors, fasteners, and stud girts, to provide a complete and stable wall-framing system.

1.2 FIELD QUALITY CONTROL

A. Testing: Owner will engage a qualified independent testing and inspecting agency to perform field tests and inspections and prepare test reports.
B. Field and shop welds will be subject to testing and inspecting.
C. Testing agency will report test results promptly and in writing to Contractor and Architect.
D. Remove and replace work where test results indicate that it does not comply with specified requirements.
E. Additional testing and inspecting, at Contractor's expense, will be performed to determine compliance of replaced or additional work with specified requirements.

1.3 REPAIRS AND PROTECTION

A. Galvanizing Repairs: Prepare and repair damaged galvanized coatings on fabricated and installed cold-formed metal framing with galvanized repair paint according to ASTM A 780 and manufacturer's written instructions.
B. Provide final protection and maintain conditions, in a manner acceptable to manufacturer and Installer, which ensure that cold-formed metal framing is without damage or deterioration at time of Substantial Completion.

DIVISION 6 - WOOD AND PLASTIC

6100: DIVISION 6 - SECTION 1 - ROUGH CARPENTRY

1. GENERAL REQUIREMENTS

SCOPE
1. Structural Carpentry specified by the Structural Engineer shall supercede these specifications if part of this construction document package. They will be shown on the drawings prepared by the Structural Engineer.
2. The scope of this section includes all labor, material and equipment necessary to complete all work specified herein and as indicated on the plans. This section includes, but is not limited to, all wood framing, wood forms for concrete, all wood-cutting, furring and backing required for all trades and checking of layout and dimensions for all trades.
3. Non-wood items in this section include manufactured metal connectors for wood framing.

2. SPECIAL REQUIREMENTS
1. All work performed under this section shall be performed by a State of California licensed contractor.
2. Contractor of this section shall be responsible for the location and elevation of all parts of the construction shown on plans or notes. Prior to commencing work, the Contractor shall carefully compare architectural and structural drawings that affect the location and/or elevation of the work, and any discrepancies shall be immediately reported to the Architect for clarification and/or adjustment.
3. Supply and install rough framing as shown on the structural drawings.
4. Coordinate all work with the work of other trades. Provide chases, cuts bracing, and blocking, required by other trades.
References All work of this section shall conform to industry standards and all governing codes and regulations, including the current adopted edition of the California Building Code (CBC) latest adopted edition.

3. MATERIALS

A. Wood
1. Lumber Materials: -All lumber shall be graded per Western Wood Products Association Lumber grading Standards. Lumber shall bear identification stamps indicating:
-Grading Association mill number
-Grade and species
-Moisture content
-Preservative treatment
2. Lumber grading: unless noted otherwise, the following shall apply
-Wall stud framing Douglas-Fir Larch
#2 & better.-Singular joists, rafters Douglas-Fir Larch
#2 & better.-Multiple joists, rafters Douglas-Fir Larch
#2 & better.-Stair stringers Douglas-Fir Larch
#2 & better.-Beams and headers Douglas-Fir Larch
#1 & better.-Posts, Douglas-Fir Larch
#1. -Blocking, plates, backing and miscellaneous framing
#3 -Glue-lam beams 24F-V4, grade or as specified on structural drawings.
3. All wood in contact with concrete, masonry, soil or exposed to the exterior (as defined by C.B.C. Section 2034.11) shall be pressure preservative-treated lumber or naturally durable. Bottom plates shall be pressure treated.
4. Sawn Lumber: Shall be Douglas fir, S4S, and shall bear a grade mark. Use grades as specified for stressed applications and "stud" grade for blocking, bridging and other non-stressed conditions.
5. Use preservative treated lumber in contact with concrete or masonry.
6. Plywood and other type sheathing shall be grade, exposure, span rating and thickness, per plans.
7. Sheathing: shall be plywood or oriented strand board rated by the American Plywood Association (APA), in grades and thickness as indicated on the structural drawings. Plywood shall conform to product standards U.S. PS 1, current edition. Floor and Deck Sheathing must be plywood.
8. Hardboard: Shall be Masonite as manufactured by Masonite Corp. Installation shall conform to the written specifications of the manufacturer and to the recommendations of the American Hardboard Association
9. See plans for additional wood framing grades or specifications.

B. Metal Connectors
1. Connectors specified shall be by Simpson Strong-Tie Co. Inc. unless otherwise specified. Alternates may be used only with prior approval of the Architect.
2. Other metal connectors as specified on the structural or architectural plans as required for compete installation.

C. Nails and Other Fasteners
1. Nails to be Common nails per C.B.C. Table 2304.9.1, galvanized based on exposure.
2. Minimum nailing shall conform to C.B.C. Table 2304.9.1. (See plans, specifications & structural details for size and type)
3. Bolts and Nuts: ASTM A307 galvanized minimum for exterior exposed use. Provide matching washers.

4. PERFORMANCE OF WORK

A. Framing and Fabrication:
1. To be installed level, plumb, true to line and dimension, and in strict compliance with sections, details and notes. Work required, but not shown and/or specified, shall conform to applicable sections of governing codes.
2. All floor joists to be solid blocked at bearing lines, longest unblocked span shall be no larger than 8' - 0". Floor sheathing shall be screwed and glued to floor joists. Existing and new floors where applicable.
3. Structural member fastener penetration shall be per C.B.C. Section 2304.
4. Glue-laminated timbers and pressure preservative treated lumber shall be re-sealed (compatible treatment) following all shop or field cuts.
5. Support all concentrated loads bearing on stud or joist cavities with solid bearing or blocking.
6. Double floor framing joists below interior walls, bath tubs and heavy appliances.
7. All wood within 6" of earth or 1" of the concrete shall be redwood or pressure treated.
8. Contractor shall install and coordinate soffit framing with the plan to allow adequate space for installation of light fixtures and mechanical equipment.
9. Installation shall be as shown and specified on the structural drawings, complete with connectors, nailing, bracing, temporary supports, and materials not shown or specified but necessary for a complete job.

B. Cutting
Cutting of beams and joist shall be limited to one-fifth the beam depth from the top and located no further from the beam end than three times the beam depth. Cuts in excess of this, or bored holes with a diameter more than two inches are not permitted without special provisions and approved by the Structural Engineer.

C. Furring
Provide wood furring where indicated or required to conceal piping, structural metal work, or other unfinished work. Use 2 inch nominal (1-1/2 inch actual) thick material of required width. Finish as shown, noted or detailed. (Metal furring may also be used where appropriate)

D. Plywood Sheathing
Plywood floor and roof sheathing shall be laid continuous over two or more framing spans. Install with face grain (and long dimension) of piece at right angles to joist and/or parallel to studs. Arrange so that no piece is less than 16 inch in either dimension. Wall panels shall be not less than 16 inches wide and 4 feet in length. Stagger all sheathing panel seams a minimum of 2 feet minimum or two stud/joist cavities. Thickness and nailing shall be as shown on plans.

E. Fire blocking and Draft Stops
Firestops and draft stopping shall be installed to cut off all concealed draft openings (both vertical and horizontal) and shall form an effective barrier between floors, between a top story and a roof or attic space, and shall subdivide attic spaces, concealed roof spaces, and floor/ceiling assemblies. The integrity of all fire blocks and draft stops shall be maintained.
1. Required fire blocking locations:
a. In concealed spaces of stud walls and partitions, including furred spaces at the ceiling and floor levels, and at 10 foot intervals in both vertical and horizontal dimensions.
b. At all interconnections between concealed vertical and horizontal spaces such as occur at floors, drop ceilings and coved ceilings.
c. In concealed spaces under stairs within stair structural stringer assemblies.
d. In openings around vents, pipes, ducts, chimney, fireplaces and similar openings which would afford a passage of fire at ceiling and floor levels with non-combustible fire stopping material.
e. At openings between attic spaces and chimney chases for factory-built fireplace chimneys.
f. Where wood sleepers are laid under wood flooring over concrete floors, the space between the floor slab and underside of wood shall be filled with non-combustible material or fire blocking. Fire blocking shall be installed so that there will be no open spaces under the flooring which will exceed 100 square feet. Install fire blocking under all permanent partitions so that there shall be no unblocked spaces between adjoining rooms.
2. Fire Block Materials
a. Fire blocking shall consist of 2 inch nominal lumber or 3/4 inch plywood sheets with joints backed by a 3/4 inch wood panel.
b. Fire blocks may also be constructed of gypsum board, mineral fiber, glass fiber, or other approved material, and securely fastened in place.
3. Draft stopping (location and criteria)
a. When there is a usable space above and below the concealed space of a floor /ceiling assembly (i.e. attic, or soffit area) it shall not exceed 1,000 square feet and/or measures more that 60 feet in any direction. Such spaces shall be equally divided by a draft stop.
b. Draft stop min. construction shall be 1/2 inch gypsum board, 3/8 inch plywood or other approved materials, with a 3/8 inch maximum gap between sheets.

6170: PREFABRICATED STRUCTURAL WOOD

A. Wood Roof Trusses
1. Supply and install wood roof trusses as shown on the structural drawings. Deliver, store and handle trusses in conformance with the manufacturer's written instructions.
2. Submit shop drawings and engineering calculations to the Architect and Structural Engineer for review and approval prior to fabrication. The calculations shall be stamped and signed by an engineer registered in the state at which the project is being built. The truss manufacturer shall provide shop drawings and calculations, as reviewed and approved by the Structural Engineer, to the building Official prior to fabrication on the trusses or, if required by the building official, prior to the issuance of a building permit.
3. Installation shall be as shown on the truss manufacturer's shop drawings and in conformance with the manufacturers written installation instructions.

B. Manufactured Lumber
1. Supply and install manufactured joists, beams, and headers as shown on the framing drawings.
2. Products shall be manufactured by the bear and trademark of, with quality control inspections. No substitution of products is allowable unless permitted in writing by the Structural Engineer.3.Installation shall be in accordance with the Products Reference Guide published by Truss Joist MacMilllan. Spans are not to exceed Truss Joist recommended spans based on L/480 live load fabrication.

6180: STRUCTURAL GLUED-LAMINATED TIMBER

1. Supply and install glued-laminated timber as shown on the structural drawings. Provide a certificate of conformance for each timber if required by the Building Official. Deliver, store and handle glued-laminated timbers in conformance with the manufacturer's instructions.
2. Installation shall be as shown on the structural drawings.
3. Product shall conform to ANSI Standards; Each timber shall be identified with an inspection mark either from the American Plywood Association - Engineered Wood Systems (APA-EWS), or from the American Institute of Timber Construction (AITC).

06200 DIVISION 6 - SECTION 2 - FINISHED CARPENTRY- *Not part of this scope of work*

DIVISION 06 - SECTION 04 - ARCHITECTURAL MILLWORK - *Not part of this scope of work*

DIVISION 07050- MOISTURE PROTECTION

1. GENERAL REQUIREMENTS

A. Scope
1. The scope of this section includes all labor, material and equipment necessary to complete all work specified herein and as indicated on the plans. The work includes but is not limited to: roofing, waterproofing, damp proofing, nonmetallic flashing, sealants, and waterproof coatings.
2. Gravel stops, flashing, and counter flashing are included under "sheet metal".

2. MATERIALS

A. See Project Exterior Finish Notes on Sheet, unless otherwise noted.
B. Below Grade Vertical Waterproofing:
1. Waterproofing shall be - "TUFF RUBBER (TR-950)" by Optimum Safeguard Waterproofing Or Architect approved equal. Telephone 1-800-794-5929.
2. BITUTHENE SYSTEM 4000", 60 mil. membrane by W. R. Grace, telephone, 1-(800) 237-2505.
3. Install in accordance with the manufacturer's specifications by a certified installer. Waterproofing contractor shall guarantee all labor and materials of waterproofing system for a period of five years.
4. Drain board and Protection Fabric: Shall be DB-55 drain board and PF-5 protection fabric by Optimum Safeguard Waterproofing. Install in accordance with the manufacturer's specifications.
5. Drainage Lines: shall be 4" (100 mm) diameter rigid perforated (holes down) PVC pipe. Locate bottom of pipe a minimum of 4" below bottom of slab. Surround pipe with 6" of gravel and filter fabric. Discharge line shall be a non-perforated 4" diameter rigid PVC pipe extending to daylight at slope.
C. Sheet Waterproofing for Parapet and other Horizontal Surface Waterproofing: Membrane waterproofing system shall be JIFFY SEAL 140/60 membrane. by Protecto Wrap. Or Bituthene 3000, by W.R. Grace Company, or equal.
1. Install in accordance with manufacturer's instructions.
2. Extend a continuous membrane a minimum of 9" below edge of parapet, each side. Provide a minimum end lap of 4" over adjoining membrane sheet. Where membrane encounters vertical surfaces, the membrane shall extend 9" up the surface, and be lapped over by building wrap. No general nailing shall be done on horizontal surface of JIFFY SEAL.
3. For sealant in contact with "Jiffy Seal" use 160 H MASTIC or JSLM URETHANE or products manufactured by Protecto Wrap. Provide adhesive compounds and tapes recommended by waterproofing sheet manufacturer for flashing.
4. Provide collection course Amocor board or equal or as recommended by waterproofing sheet manufacturer.
5. Installer must examine substrate and notify contractor of unsatisfactory conditions. Do not proceed until these corrections have been corrected in a manner acceptable to installer.
6. Institute all required procedures for protection of completed membrane during installations of work over membrane.
D. Building Weather Protection - Building Wrap:
1. Supply and install weather-resistive barrier to all weather exposed surfaces to fully protect the structure from water intrusion as required by UBC. The weather-resistive barrier shall constitute of building paper, penetration flashing at all wall openings and waterproof membrane as shown on the drawings and details and as specified below
2. Shall comply with CBC section 1402. Building paper: Shall be breather type Grade D sheathing paper meeting or exceeding federal specifications.
3. Building wrap shall be applied horizontally with the upper layer lapped on the lower layer not less than 2 inches and end laps shall be not less than 6 inches. Building wrap shall include Two Layers of 60-minute grade "D" building paper.
4. Building paper shall be: Fortifiber Corp.: "SUPER JUMBO-TEX" or approved equal. Telephone: 1-(800) 443-4079. Install all materials per manufacturer's specifications
5. Use "JIFFY SEAL" 140/60 at all corners as noted on plans. Install over two layers of building paper with one layer building paper lapped over "JIFFY SEAL" or as noted or shown on details.
6. *Alternate Building Wrap Layer:* Base Layer: Tyvek "Home Wrap" house wrap by Dupont. Telephone 1(800) 448-9835. Install per manufacturers specifications.
7. Penetration Flashing: Shall be 12" wide heavy-duty reinforced Moistop or equal between building wrap layers conforming to federal specifications.
8. Building Wrap: Shall be installed in accordance with manufacturer's installation instructions using primer form same manufacturer, as required
E. Door & Window Flashing: Sheet metal head flashing shall be per plan notes and details.
Opening flashing shall be "MOISTOP" by Fortifiber Corp. Flashing including flashing sealants shall be installed per manufacturer's instructions. Windows, Doors and Skylights: Windows, Door and Skylights shall be per plans. Contractor to verify all rough openings with manufacturer. Provide for unit installations as required, and install per manufactures instructions. See schedules for Windows, Door and Skylights sizes
F. Roofing: (See Roof Notes on Roof Sheet for Project Specific Roofing)
1. Roofing Underlayment: 40# fiberglass reinforced felt underlayment sheet. Install per manufactures instructions. As manufactured by GS Roofing Products (or architect approved equal).
2. Waterproofing at roof areas less than 4: 12 *and Alternate Roofing Underlayment:*
"Ice and Water Shield" By W. R. Grace. Install per manufacturer's instruction. With a #40 roofing felt installed over membrane.
3. Roofing System: 40 Year UL 790, Class A Roof (See Project Roof Notes on Roof Sheet for Project Specific Roofing)
a. Fiberglass Roof Singles shall be: Fiberglass Shingles, "Sable or Charcoal Black" by Elk, Inc. Or Owens Corning, IBCO ESR -1372 (match existing). Install with exposure pattern to match existing over underlayment Roofing system installed by a llicensed roofing contractor. Roofing system shall have a minimum 10-year labor and material warranty.
b. Tile Roofing shall be: US Tile Roofing or equal.
1. Install per manufactures specifications
2. Lace all tile in valleys.
3. Mortar set all ridge & hip tiles.
4. Use copper flashing throughout.
5. Use #40 tile under underlayment.
6. Use torch down roofing at all horizontal surfaces.
7. Cricket all flat roof to vertical wall joints with copper flashing over solid wood cart.
8. Roofing shall be installed in accordance with manufacturer's specific installation procedures.
9. Provide all required sheet metal flashing and caulking.
10. Roofing system shall be installed by a licensed roofing contractor per manufacture's specifications. Roofing system shall have a minimum 10-year labor and material warranty against leaks.
11. Contractor shall have a meeting with the roofing contractor, owner and architect prior to installation to review drawings, and any questions or concerns regarding the roof details, installation, finish, and roof maintenance.
G. Deck and Balcony Waterproofing: (Verify Part of Project Scope)
1. Surface Preparation: Wood surfaces shall be clean, dry, and free of sharp protrusions, dust and voids. Repair all area as needed before applying membrane. All exposed metal surfaces that will be in contact will waterproof membrane are to clean and free of all paints, oils, rust and any other contaminants.
2. Counter-slopes: Area of crickets and counter sloped to allow drainage to deck drains and scuppers shall be sloped 1/8" per 12" (minimum) with G-26 (latex -cement) flooring underlayment by Crossfield Products Corp.
3. Deck Railing System: Per drawings and details. To be approved by owner.
4. Metal Flashing and Counter Flashing: All exterior flashing to be 16 oz. copper unless otherwise noted. All exposed copper shall have a mill finish. Hem all exposed edges.
5. Deck Drain and Overflow: Deck drain BDCD3NH by Thunderbird Products. Telephone (800) 658-2473. 5" x5' bronze grate with 16 oz copper base. Provide separate drain for deck drain and deck overflow drain lines. Provide 3" I.D. ABS drain line from deck to foundations. Connect deck drain line to subterranean site drainage system.
6. Deck Surface Waterproofing: Waterproofing system shall be "Dex-o Tex. Weatherwear " by Crossfield Products Inc. ESR - 1757. Extend a continuous waterproof membrane a minimum of 6" above edges of deck. Installed in strict accordance with manufacturer's specifications by a manufacturer's certified installer. General Contractor shall follow manufacturer's specification for plywood substrate.
7. Water Test: After membrane is installed plug all scuppers and drains and flood test deck with a min. of 1" of water for 24 hours.
8. Protection Board: By W.R. Meadow, Inc., telephone (706) 883-4500: PC-2 or approved equal, (1/8") protection board. Install per manufacturers specifications.
9. Mortar Bed: 3.5# self furred expanded metal lath reinforced mortar bed, 3/4" minimum 1 -1/2" maximum thickness. Mortar bed is dependent on stone thickness.
10. Stone /Tile Flooring: Provide a $7 /square foot allowance for material only. Flooring material as selected by owner, verify floor tile pattern. Provide 4 sample slate pieces for owner review and approval.
11. Grout: Color to be selected by owner.
12. Penetrating Sealer: For stone and grout. "Enviroseal Double 7" by HYDROZO INC. telephone 1-(800) 422-1902. Penetrating, non-staining, non-coloring, or de hardening, water repellent sealer to be applied on all stone and grout surfaces. Prior to application a sample application to a 2' x 2' stone and grout a sample shall be done for approval. Apply per manufacturer's specifications. Sealer shall be re-applied every 2 years maximum.
13. Caulking and Sealant: Manufactured by Dow Corning Corporation, telephone (510) 490-0650.
14. One-part, silicone glazing and waterproofing sealant: Dow Corning #795 - medium modulus, Silicone Building Sealant.

3. PERFORMANCE OF WORK

A. All materials shall be installed per manufacturer's recommendations, unless noted otherwise on plans.
B. Installer must examine substrate and notify contractor of unsatisfactory conditions. Do not proceed until these corrections have been corrected in a manner acceptable to installer.
C. All materials and installations shall be warranted by the installer and manufacture for a period of not less than ten years for date of project completion. Unless noted otherwise

DIVISION 07200 - THERMAL PROTECTION - INSULATION Not part of this scope of work

FIELD COPY

DIVISION 07600 - SHEET METAL

1. GENERAL REQUIREMENTS

A. Scope This section includes all labor, material and equipment necessary to complete all work specified herein and as indicated on the plans. The work of this section includes, but is not limited to sheet metal work shown, noted or specified.
B. Special Requirements
1. All work performed under this section shall be performed by a State of California licensed sheet metal contractor.
2. Supply and install copper flashing, gutters, downspouts, scuppers as indicated on the drawings or as directed by the Architect or Owner, including miscellaneous items required for a completely water tight job.
3. Contractor shall avoid installing copper flashing in contact with metal or aluminum. Where contact is anticipated, the Contractor shall notify the Architect.

2. MATERIALS *See exterior finish notes on sheet for materials, unless noted otherwise.*

A. Galvanized Steel sheet metal
Galvanized sheet metal shall be zinc coated steel, ASTM A562, with 0.20% copper, G90 hot dipped galvanized, mill phosphatized where indicated for painting. Sheet metal shall be 26-gauge minimum, unless otherwise noted. All cut metal edges shall be sealed with Cold Galv. All exposed edges to be hemmed back 1/4" unless detailed otherwise. Submit shop drawings of all custom fabricated items for Architect's review.
B. Copper Sheet Metal
Items include but are not limited to; flashing, counter flashing, gutters, roof penetrations and miscellaneous exterior metal. Use 20 oz. copper unless noted otherwise, Fasteners shall be copper. All exposed edges to be hemmed back 1/4" unless detailed otherwise. Submit shop drawings of all custom fabricated items for Architect's review.

TECHNE
DESIGN | DEVELOPMENT
3956 30th Street, San Diego, CA 92104
techne-us.com sustainablearchitect.org
o 619-940-5814 m 313-595-5814

CONSULTANTS

LICENSED ARCHITECT
MICHAEL RENE MORTON
C-19371
REN. 04/30/2015
STATE OF CALIFORNIA

414 29th Avenue
Oakland, CA 94601

OWNER

29th Avenue Group, LLC
1211 Embarcadero Way, Suite D
Oakland, CA 94606

BuildZig
Dream it. Build it. Zig it.

MARK	DATE	DESCRIPTION
01	11.10.14	1st Building Permit Submittal
02	02.23.15	2nd Building Permit Submittal

2/22/2015 6:02:57 PM

PROJECT NO: 1410
CAD DWG FILE: G001 COVER SHEET.DWG
DRAWN BY: A.S, M.M., J.C., J.S.
CHK'D BY: A.S., M.M

COPYRIGHT: TECHNE expressly reserves its common law copyright and other property rights in this document. This document shall not be reproduced, copied, changed or disclosed in any form or manner whatsoever without first obtaining the express written consent of TECHNE.

SHEET TITLE
GENERAL CONDITIONS / SPECIFICATIONS

G004

3. PERFORMANCE OF WORK
A. Workmanship
1. All work shall conform to the Sheet Metal and Air Conditioning Contractors National Association (S.M.A.C.N.A.) Architectural Sheet Metal Manual, latest edition.
2. All exposed interior sheet metal shall be primed and painted to match color of adjoining materials, unless noted otherwise.
B. Concealed Ducts for Exhaust Fans and Blowers
Same cross sectional areas as fan discharge opening, fabricated with smooth locked seam joints. Transitions: as short and direct as the material will allow. Also, refer to mechanical specifications.

DIVISION 07700 - PREFABRICATED ROOFING SPECIALTIES
1. GENERAL REQUIREMENTS
A. Scope This section includes all labor, material and equipment necessary to complete all work specified herein and as indicated on the plans. The work of this section includes, but is not limited to prefabricated roof specialties and work shown, noted or specified.
B. Special Requirements
1. All work performed under this section shall be performed by a State of California licensed Roofing contractor.
2. MATERIALS See Roofing notes for materials, unless noted otherwise.
3. PERFORMANCE OF WORK
1. Supply and install roof vents as indicated on the drawings.
2. Product shall be half round dormer roof vents, or as shown on drawings.
3. Vents as manufactured by Harlen Metal Products, Inc., or approved equal. Roof vents of alternate manufacturers must provide a minimum of 73 square inches of free vent area each, unless additional vents are installed to provide equivalent total vent area.
4. Installation shall conform to the written instructions of the manufacturer and shall be coordinated with the work of the roofing installer. Provide curbs, flashings, fasteners, and accessories necessary for a fully watertight installation.
5. Install all plumbing vent stack, exhaust fans, or other miscellaneous roofing items as shown on the roof plan.
6. Group all roof vent pipes and vents to be not be visible from street or entry.

DIVISION 07900- JOINT SEALERS
1. GENERAL REQUIREMENTS
A. Scope This section includes all labor, material and equipment necessary to complete all work specified herein and as indicated on the plans. The work of this section includes, but is not limited to sealant application or work shown, noted or specified.
B. Special Requirements
1. All work performed under this section shall be performed by a State of California licensed contractor.
2. Supply and install all sealants and sealant accessories as indicated on the drawings or as directed by the Architect or Owner, including miscellaneous items required for a completely water tight job.
3. Sealants for project shall be verified by contractor for specific application, substrate preparation and installation. A Dow Corning representative or other sealant manufacturers rep. shall be consulted to verify sealant application and if surface primers will be required for proper installation.
2. MATERIALS
A. Caulking and Sealant: Caulking and sealant shall be manufactured by Dow Corning Corporation, telephone (510) 490-0650, or architect approved equivalent product.
1. One-part, mildew resistant silicone sealant: Dow Corning #786 -Mildew Resistant Silicone Sealant.
2. One-part, ultra-low modulus (+100%,-50% movement), electrometric sealant: Dow Corning # 790 -Silicone Building Sealant.
3. One-part, medium modulus (±50% movement), weatherproofing sealant: Dow Corning # 791 - Silicone Perimeter Sealant.
4. One-part, medium modulus (±50% movement), silicone glazing and waterproofing sealant: Dow Corning #795 - Silicone Building Sealant.
5. One-part, high modulus (±25% movement), structural glass sealant: Dow Corning # 799 - Silicone Structural Adhesive
6. One-part, high modulus (±25% movement), glazing sealant: Dow Corning # 999A - Silicone Building & Glazing Sealant
7. For sealant adjacent to or in contact with "JIFFY SEAL", see sealant specified in section 2 item E.
8. Backers: Inert fibrous glass, polyethylene or polyurethane as acceptable to sealant manufacturer.
3. PERFORMANCE OF WORK
C. Sealant shall be non-drying gun applied to make a watertight seal at all joints, sills, windows, door, trim elements, etc. Backer rods or bond breaker agents shall be used depending on the specific application.
D. Sealant for each particular application shall be reviewed by the contractor for compatibility with surrounding materials prior to application. Color of exposed sealant shall match surrounding materials. Surfaces to be sealed shall be properly cleaned prior to application.
E. Sealant installation shall be in accordance with the manufacturer's written installation instructions. Mask surfaces not to be sealed. Apply sealant manufacturer's recommended primer.
F. Supply and install sealants with backer rods, to provide a watertight installation. Conform to the recommendations of the manufacturer. Colors shall match adjacent surfaces unless otherwise directed by the Architect
G. Maximum 3/8" sealant depth unless otherwise shown. Minimum joint width is 1/8" for metal-to-metal joints and ½" maximum width elsewhere. Apply sealant under sufficient pressure to fill voids. Finish exposed joints smooth and flush with adjoining surface unless recessed joints are shown. Remove temporary masking as soon as joint is completed.
H. Clean material from surfaces not to receive sealant and restore the finish as required. If surfaces adjoining joints are stained and cleaning is not acceptable to the Owner, remove the affected work and provide new finish materials as directed and approved, at not extra cost to the Owner.
I. Seal penetrations through fire-rated assemblies using 3-M Fire-Barrier manufactures by 3-M Company Inc., installed to the specifications and recommendations of the manufacturer.
J. Warranty: Sealants shall have a 20-year warranty.

DIVISION 08050 - DOORS AND WINDOWS
1. GENERAL REQUIREMENTS
A. Scope:
The scope of this section includes all labor, material and equipment necessary to complete all work specified herein and as indicated on the plans. This section includes furnishing and installing doors, glass, windows and mirrors.
B. Special Requirements
1. All work performed under this section shall be performed by a State of California licensed contractor.
2. All installed glazing shall receive a protective coating or covering to protect finish after installation.
3. Where windows and or doors are to be replaced or relocated, the Contractor shall coordinate with the Owner for removal and storage. The existing openings shall be field verified and modified as needed to accommodate the new door or window. If the walls or header must be enlarged, the Architect shall be notified prior to work starting.
4. Provide emergency exit doors or windows from sleeping rooms.
2. MATERIALS
A. Doors
1. All interior doors shall be by T.M. COBB or Equal, unless noted on plans.
2. Door style and finish shall be selected by architect and approved by owner.
3. All exterior doors shall be shall be 1-3/4 inch thick solid core, fabricated with Type I adhesives.
4. All doors to bedrooms, bathrooms and laundry room shall be 1-3/4" solid core. All others shall be 1-3/8 inch hollow core, fabricated with type II adhesives at interior doors.
5. All door frames shall be 1-1/4 inch thick paint grade Douglas Fir, width shall match wall thickness.
6. All doors from interior of house to garage shall have a fire rating of 20 Minutes door and frame, equipped with a self closure.
7. See Door and Window Notes and Title 24 Energy Notes for additional requirements.
B. Mirrors
1. Shall be 1/4 inch crystal, clear polished edges, no exposed frames or clips, with fully sealed back.
C. Operable Windows
1. See Window Schedule, plans, or manufacturer's specifications.
2. Also, see Door and Window Notes and Title 24 Energy Notes for additional requirements.
3. Net clear window opening area shall be not less than 5.7-sq. ft. (821-sq. in.) minimum. Net opening height dimension, 24" clear minimum. Minimum net opening width dimension, 20" clear. Finished sill height maximum, 44" above floor. Per CBC Section 1026.3 & 1026.3
D. Fixed Windows
1. Unless otherwise noted to be the same manufacturer as operable windows.
E. Miscellaneous Fixed Glass
1. As noted on plans.
F. 08360 Sectional Overhead Doors-(See Door Schedule).
1. Supply and install sectional overhead doors and operating hardware as shown on the drawings. Supply and install garage door openers as directed by Owner.
2. Product shall be four section wood or other specified material door and door manufacturer's operating hardware. Submit manufacturer's catalog cuts to Owner for selection of design and finish.
3. Installation shall be in accordance with the manufacturer's written installation instructions.
G. Shop Drawings (if requested)
1. Shop drawings of all exterior door and window installations to be submitted to the Architect for review prior to fabrication.
3. PERFORMANCE OF WORK
A. Installation
1. All doors, glazing and windows shall be installed per manufactures specifications.
2. Glass shall be cut smooth with straight edges, accurately sized as required with proper clearance for expansion.
B. Breakage and Damage
Breakage and damage of any kind shall be repaired or replaced by the Contractor.
4. COMPLETION REQUIREMENTS
1. The Contractor is responsible for the cleaning of all glass, widows and door frames before final acceptance of the job.
2. All component warranty and maintenance information shall be given to owner at project completion.

DIVISION 08200 - WOOD DOORS AND WINDOWS
1. GENERAL REQUIREMENTS
A. Scope: Supply and install wood exterior and interior doors as shown on the drawings. Doors shall conform to the applicable Industry Standard of the National Wood Window and Door Association (NWWDA). Store and handle doors in accordance with the recommendations of NWWDA and the manufacturer.
B. Special Requirements
1. All work performed under this section shall be performed by a State of California licensed contractor.
2. MATERIALS
A. Wood doors shall be:
1. Exterior Flush Doors: 1-3/4 inch thick, 5-ply construction glued-up solid wood, or 7-ply construction particleboard core with sound grade birch or medium density overlay veneer unless otherwise shown. Trim shall be added if shown on drawings.
2. Exterior Stile and Rail Doors: 1-3/4 inch thick solid wood stile and rail and solid wood raised panels. Joinery shall be either doweled or mortise and tendon. Glazing, if indicated, shall be fully tempered to ANSI Standards.
3. Exterior Glazed Doors: 1-3/4" thick solid wood rail and stile door with individual panes of glass as shown on the exterior elevations. Glass shall be tempered to ANSI Standards.
4. Interior Doors: Flush 1-3/8" or 1-3/4" thick solid core, sized per the drawings. If other than flush door (raised panel, etc.) is indicated, door design shall be selected by the Owner from the Contractors supplier's submittal.
B. Wood windows shall be:
1. Comply with NWWDA Standards 1.5.2 and 1.5.4 with a Quality Certification Label on each unit. Install to the specifications and recommendations of NWWDA and the manufacturer.
2. Products shall be as selected by the Owner and shall be shop glazed.
3. Installation shall be in accordance with the recommendations of NWWDA and the manufacturer.

DIVISION 08700 - FINISH HARDWARE
1. GENERAL REQUIREMENTS
A. Scope:
The scope of this section includes all labor, material and equipment necessary to complete all work specified herein and as indicated on the plans. This section of work includes but is not limited to, the furnishing of all finish hardware including, door handles, door stops, door hinges, cabinet door pulls, and miscellaneous hardware necessary for a finished project.
2. MATERIAL AND INSTALLATION
A. Material as selected or specified for project, U.N.O.
B. See Door and Window Notes and Cabinet Schedule and Notes.
C. All hardware not specified shall be selected and/or approved by the owner prior to installation.
D. Door Hardware
1. All locksets and deadbolts shall be operable by one key. All keys shall be tested in locks, properly tagged for location and delivered to owner.
2. Provide four (4) complete key sets to owner.
3. Door hardware shall match Latch. Provide keyed deadbolts at all exterior doors.
4. Interior doors to bedrooms and baths shall have privacy latch.
5. Hinges shall be: Oil Rubbed Bronze or Brushed Stainless Steel (verify).
6. Provide each door with three (3) hinges. At exterior doors provide non-removable pins for out swing doors.
7. Lockset / latch Schedule:
8. Front door: Manufacture and Style to be selected by owner.
9. Other exterior doors: **Schlage**, style to be selected by owner
10. Interior swinging doors: **Schlage**, style to be selected by owner.
11. Sliding pocket & closet: **Schlage**, style to be selected by owner.
12. Provide cost allowance for hardware to be selected by owner.
E. INSTALLATION
1. Contractor shall supply and install all hardware except Owner supplied hardware.
2. Submit a hardware schedule to the Owner, specifying the manufacturer's catalog numbers, location and finishes. Provide templates to trade doing work and furnish all hardware complete with fasteners.
3. Secure finish hardware with suitable fasteners of the same material and finish as the item being attached. After fitting hardware to doors, remove all finish hardware except hinges, carefully.
4. Door hinges and door strips shall be selected by Architect and Owner with finish submittals approved by Owner.
5. Contractor shall prepare & verify number, type & location for all door & misc. hardware.
6. Replace in properly marked boxes, and place in storage. After painting and finishing is completed, permanently install finish hardware.
7. Brush finished stainless steel unless furnished with the door unit. Exterior door threshold shall be brush finished stainless steel.
8. Coat metal thresholds with asphaltic paint on the bottom, set in mastic and have plastic flashing specified elsewhere extend up the jambs.
3. COMPLETION REQUIREMENTS
A. The Contractor shall be responsible for verifying the correct installation and smooth operation of all finish hardware before final acceptance of the job.
B. All component warranty and maintenance information shall be given to owner at project completion.

DIVISION 08800 - GLAZING
1. GENERAL REQUIREMENTS
A. Scope:
The scope of this section includes all labor, material and equipment necessary to complete all work specified herein and as indicated on the plans. This section includes furnishing and installing glass, windows and other miscellaneous specified glass and mirrors.
2. MATERIALS
A. This section applies to all glass and glazing shown, except glass in pre-glazed door and window assemblies. Comply with CBC and ANSI standards as applicable.
1. All glazing shall comply with Standards of the U.S. Consumer Product Safety Commission. Manufacturer to supply Certificate of Compliance to the Owner.
2. Glass and glazing shall conform to the provisions of Chapter 24 of the 2001 CBC. All glazing panels adjacent to doors and within 18" of walking surface shall be tempered.
3. Glass shall be manufactured by LOF Glass, Inc., PPG Industries, Inc., Ford Glass Division, except where specific types or colors of different manufacturers are indicated or specified.
4. Float Glass: Type I, (transparent glass flat), Class 1 (clear) Quality q3, (glazing select), double strength unless otherwise specified or required by glass area or hazardous location. Tinted float glass shall be Type I, Class 2 (tinted heat absorbing and light reducing) quality q3.
5. Tempered Glass: Condition A, Type I or II, Class 1, Quality q3, Kind FT, match color of clear, reflective or tinted glass as applicable; fully tempered. (Heat strengthened glass may not be substituted for fully tempered glass.) Perform tempering by horizontal roller gas hearth process only; processes making gripper or tong marks are not acceptable. Handle glass according to manufacturer's instructions. Lights showing excessive distortion will not be permitted.
6. All new glazing (fenestrations) will be installed with a certifying label attached, showing the U-value.
7. Install tempered glazing in all hazardous locations as required by CBC and as indicated on the drawings, including, but not limited to the following locations: Per CBC Section 2406
8. Swinging, sliding, and fixed panels of doors, except wardrobe.
9. Enclosures for hot tubs, whirlpools, saunas, steam rooms, bathtubs and showers. Glazing in walls enclosing these compartments where the bottom edge of glazing is less than sixty (60) inches above the standing surface and drain inlet.
10. Glazing adjacent to bathtubs and within 5 feet from tub floor.
11. Glazing adjacent to a door within a twenty-four (24) inch arc of either vertical edge of the door in a closed position and where the bottom edge of glazing is less than sixty (60) inches above the walking surface.
12. Glazing in individual, fixed, or operable panel, other than those locations indicated above, where the individual pane is greater than nine (9) square feet, the bottom edge is less than eighteen (18) inches above the floor, and one or more walking surfaces is within thirty six (36) inches horizontally of the plane of glazing.
13. Glazing in railings.
14. Manufacturer of the glass used in the assembly shall manufacture insulated glass.
3. PERFORMANCE OF WORK
A. Install glass in wood and metal frames according to manufacturer's instructions. Minimum glass edge bearing clearance and edge lap (bite) shall be per Code and manufacturer's printed instructions.
B. Wash and polish glass both sides and leave free of soiling without the use of any harsh cleaning agents, caustics, abrasives, or acids for cleaning.

DIVISION 09-200 - LATH AND EXTERIOR PLASTER
1. GENERAL REQUIREMENTS
A. Scope
1. The scope of this section includes all labor, material and equipment necessary to complete all work specified herein and as indicated on the plans. This section of work includes, but is not limited to, building wrap, lath and lath attachments, corner reinforcement, expansion screeds, extruded foam sections and exterior Portland cement plaster (stucco).
2. All lath and plaster shall be prepared and installed per Chapter 25 of the 2007 C.B.C. and per the California Lathing and Plastering Contractors Association Standards unless otherwise noted.
3. Application: Conform to CBC and ICBO reports, printed instructions of manufacturer and the Plaster/Metal Framing System/Lath Manual published by the California Lathing and Plastering Contractors Association, Inc.
B. Special Requirements
1. All work performed under this section shall be performed by a State of California licensed plastering contractor.
2. All disposal a plaster products shall conform to State and Local requirements.
3. Prior to installation of the weather-resistive barrier, inspect the condition of framing and all surfaces to receive stucco, to assure that they conform to code and are suitable for the finish to be applied. Make repair and corrections as needed.
2. MATERIALS
A. Lathing
1. Vertical Exterior: lathing for exterior Portland cement plaster (stucco) shall be of woven steel wire fabric (stucco netting) galvanized, with 1-1/2 inch openings of #17 gauge, with a backing of two layers water resistant paper, over 18 gauge wire stretched taut horizontally to vertical surfaces and spaced at not more than six inch (6") intervals. Woven steel wire shall be attached to framing with 1-1/2 inch, 12 gauge, 3/8 inch head furring nails at a maximum intervals of six inches (6"). Maximum spacing of attachments from longitudinal edges shall not exceed two inches.
2. Horizontal Exterior :backing for exterior Portland cement plaster (stucco) shall be of 3/8 inch high rib - 3.4 lbs. / square yard, galvanized steel expanded metal or expanded metal (diamond mesh) lath design specifically for horizontal applications such as ceilings or soffits. Expanded metal and diamond lath shall be attached with 1-1/2 inch long - 4d box or common nail, or approved screw fasteners, with 5/8 inch minimum supporting frame penetration. Fasteners shall be spaced at 6 inch o.c. maximum. Maximum spacing of attachments from longitudinal edges shall not exceed two inches.
3. Framing: Lathing shall be installed over framing spaced at 16 inches on center or at framing at 24 inches on center on surfaces or as indicted on drawings.
B. Fasteners: Nails and Staples: Comply with CBC and drawings for type, size, gauge, and spacing.
C. Accessories: Unless noted otherwise on plans, use the following.
1. Expansion Screed: Type "M" - AMCJM-780, exterior grade vinyl, 3/16 inch reveal, 7/8 inch ground, exterior grade vinyl, by **AMICO** or equal. Telephone (800) 859-5363. Install per manufacturer's specifications.
2. Stucco Expansion Screed: Weep screed # AMFWSP-238-780, exterior grade vinyl, 7/8 inch ground, exterior grade vinyl, by **AMICO** or equal. Telephone (800) 859-5363. Install per manufacturer's specifications.
3. Miscellaneous stucco accessories as required by details or as needed to perform a complete and thorough job, shall be exterior grade vinyl, by **AMICO** or equal.
4. Copper or Galvanized Steel (Galvanized steel shall be minimum 26 gauge)may be used at specific job site were prior written approval by Architect is issued to Contractor.
5. Plastering Accessories: Amico, PVC by Plastic Components, Inc., Miami, FL, or equal
6. Reglet: by Fry Reglet Co., Alhambra, CA.
7. Furnish and install all screeds, interior and exterior corner reinforcements, casing beads, fasteners, etc. Install as required or detailed. Secure all to metal lath required and backing. Lap flanges with weather-resistive barriers to shed water.
8. Tape for cracks shall be a coated adhesive backed open-weave fiberglass tape, 2-1/2 inches wide, designed to reinforce joints.
D. Plastering - Machine or Hand Applied
1. Portland cement plaster shall conform to "Standard Specification for Portland Cement" ASTM Designation: C 150, Type I or Type II..
2. Exterior Stucco: Conforming to the general requirements of "Specifications and Standards for Manufactured Stucco Finishes" issued by Stucco Manufacturers Association, Sherman Oaks, CA.
3. Manufactured by Expo Stucco, La Habra or Highland Stucco, delivered in manufacturer's sealed containers, requiring only addition of water for use. Furnish integrally-colored stucco in color and texture selected by Architect.
4. When plastic or waterproof cement is used, no lime or other plasticizer may be added to mix.
5. Sand shall be clean and well graded from course to fine.
6. The approved application shall be composed of 3 coats totaling not less than 7/8" thickness.
7. *ALTERNATE ADMIXTURE:* Stucco shall contain a micro-fiber reinforcement: HI-TECH FIBERS or approved equal. Manufactured by Hi-tech fibers. Telephone 1(800) 344-1572. Mix fibers with stucco per manufacturer's instructions.
4. PERFORMANCE OF WORK
A. Subsurface Preparation
1. Install stucco true to lines and level. Stucco shall be installed to provide uniform surface flatness with a maximum surface variation of 1/8 inch in 10 feet in any direction.
2. Extreme care shall be taken to fully mask all exposed aluminum, glass, wood, and other exposed surfaces prior to plastering. Surfaces shall be protected until all plastered surfaces are hardened and fully cured. Unless noted otherwise, all stucco walls shall have a stucco screed located not less than 4 inch above finish grade, or 2 inch above concrete or deck surface.
3. Install only over two layers of grade "D" Weather-Resistive Barrier: Cover all surfaces with a weather-resistive barrier conforming to CBC Standard 14-1 for Waterproof Building Paper or CBC 2510.6.
4. Over solid sheathing apply two layers of Grade D 60-min. paper.
5. Over horizontal or sloping areas apply one layer 40 mil. Waterproof membrane , "jiffy seal" or Bithuthane 3000 or equal.
B. Trim Installation
1. A weep screed or "J" termination with weep hole shall be provided at or below the foundation plate line for all exteriors with stucco. Weeps shall be placed a minimum of 2" above concrete or 4" above grade.
2. Expansion and control joints shall be as called out on drawings and installed per manufacturer's recommendations.
C. Plaster Installation
1. Apply scratch (first) coat evenly with sufficient material and pressure to form full keys on metal and wire lath, then score horizontally. Scratch coat shall be cured for a minimum period of 48 hours.
2. Brown (second) coat: After scratch coat is initially set and hardened, apply brown coat. Apply brown coat to thoroughly dampened scratch coat. Bring brown coat out to grounds, straighten to a true and uniform surface, float and compact and leave sufficiently rough to assure adequate bond for finish coat. Keep moist for 72 hours, and allow to air cure for 21 days before applying finish coat.
3. Prior to finish coat application, any surface cracks on "brown" coat shall be covered with an open-weave fiberglass tape. There shall be no cold joints left in any application, that is, each coat shall be applied in such a manner so as to start and stop only at normal breaks such as corners, expansion joints and other natural stops.
4. Finish coat (1/8"), color and texture shall be approved by the owner in advance of starting the application. Finish coat shall contain integral color and shall be applied no sooner than 21 days after application of the preceding coat. Finish texture shall be per exterior finish notes.
5. Fog Coat: Will not be required if finish plaster is uniform in color and texture, to the satisfaction of the Owner. If finish plaster is not uniform, apply fog coat as part of this work, without additional cost to the Owner.
6. Material: Cementitous spray consisting of white Portland cement, lime and pigments, of same manufacturer as finish coat. Color to match finish coat.
D. Plaster Installation at Existing Plaster
1. All joints between existing and new stucco shall be feathered together over 12 inches.
2. The projects with new and existing stucco finish shall match existing in texture and color unless otherwise indicated.
3. Where the existing stucco color is integral in the existing finish, provide a new color coat over all existing surfaces.
4. Where the existing stucco has been painted the Contractor shall provide a new painted finish over all stucco surfaces or shall sand blast stucco to remove paint and then provide a new color coat.
E. Application over Masonry and Concrete:
Apply bonding coat in accordance with manufacturer's recommendations. Apply brown coat and allow to cure for 14 days. Apply finish coat within screeds with no dry laps, tool marks, crazing, checking and other surface irregularities.
F. Stucco Over Decorative Foam or Wood Trim:
Install foam shapes with adhesive, wood shape with nails. Apply boding coat over foam or wood, embed in fiberglass fabric in bonding coat and allow to set. Apply color coat and finish coat as specified elsewhere. Protect shapes from damage. Replace damaged material at no cost to the Owner.
G. Seal-Coat:
Apply to all exterior stucco surfaces after finish coat has set and dried thoroughly. Seal-coat applied to stucco shall be "Enviroseal Double 7" by HYDROZO INC. telephone 1-(800) 422-1902. Penetrating, non-staining, water repellent sealer to be applied on all stucco surfaces. Apply per manufacturer's specifications.
5. COMPLETION REQUIREMENTS
A. On completion of the work, remove scaffolding, equipment, and rubbish from the site. Stucco and other surfaces shall be left in a clean and uniform appearance.
B. All over-spray shall be thoroughly removed and all affected surfaces cleaned and left in an unmarked condition.

SECTION 09-2216 - NON-STRUCTURAL METAL FRAMING
PART 1 - GENERAL
1.1 RELATED DOCUMENTS
A. Drawings and general provisions of the Contract, including General and Supplementary Conditions and Division 1 Specification Sections, apply to this Section.
1.2 SUMMARY
A. This Section includes non-structural steel framing members for the following applications:
1. Interior framing systems (e.g., supports for partition walls, framed soffits, furring, etc.).
2. Interior suspension systems (e.g., supports for ceilings, suspended soffits, etc.).
B. Related Sections include the following:
1. Division 5 Section "Cold-Formed Metal Framing" for exterior and interior load-bearing and exterior non-load-bearing wall studs; floor joists; roof rafters and ceiling joists; and roof trusses.
2. Division 6 Section "Rough Carpentry" for blocking and bracing.
3. Division 7 Section "Building Insulation" for insulation installed with Z-shaped furring members.
4. Division 7 Section "Fire-Resistive Joint Systems" for head-of-wall joint systems installed with non-load-bearing steel framing.
5. Division 9 Section "Gypsum Plaster" for metal lath supported by non-structural metal framing.
6. Division 9 Section "Portland Cement Plaster" for metal lath supported by non-structural metal framing.
7. Division 9 Section "Gypsum Board Shaft-Wall Assemblies" for non-structural metal shaft-wall framing, gypsum panels, and other components of shaft-wall assemblies.
1.3 SUBMITTALS
A. Product Data: For each type of product indicated.
1.4 QUALITY ASSURANCE
A. Fire-Test-Response Characteristics: For fire-resistance-rated assemblies that incorporate non-structural steel framing, provide materials and construction identical to those tested in assembly indicated according to ASTM E 119 by an independent testing agency. Products used in the assembly shall carry a classification label from a testing laboratory acceptable to authority having jurisdiction.
B. STC-Rated Assemblies: For STC-rated assemblies, provide materials and construction identical to those tested in assembly indicated according to ASTM E 90 and classified according to ASTM E 413 by an independent testing agency.
PART 2 - PRODUCTS
2.1 NON-STRUCTURAL STEEL FRAMING, GENERAL
A. Framing Members, General: Comply with ASTM C 754 for conditions indicated.
1. Steel Sheet Components: Comply with ASTM C 645 requirements for metal, unless otherwise indicated.
2. Protective Coating: ASTM C 645/C 645M, G40 (Z120), or equivalent corrosion resistance
2.2 SUSPENSION SYSTEM COMPONENTS
A. Tie Wire: ASTM A 641/A 641M, Class 1 zinc coating, soft temper, 0.0625-inch- diameter wire, or double strand of 0.0475-inch-diameter wire.
B. Hanger Attachments to Concrete:
1. Anchors: Fabricated from corrosion-resistant materials with holes or loops for attaching wire hangers and capable of sustaining, without failure, a load equal to 5 times that imposed by construction as determined by testing according to ASTM E 488 by an independent testing agency.
a. Type: Cast-in-place anchor, designed for attachment to concrete forms, Post installed, chemical anchor, or Post installed, expansion anchor.
2. Powder-Actuated Fasteners: Suitable for application indicated, fabricated from corrosion-resistant materials with clips or other devices for attaching hangers of type indicated, and capable of sustaining, without failure, a load equal to 10 times that imposed by construction as determined by testing according to ASTM E 1190 by an independent testing agency.
C. Wire Hangers: ASTM A 641/A 641M, Class 1 zinc coating, soft temper, and 0.162-inch diameter.
D. Flat Hangers: Steel sheet, in size indicated on Drawings or by 3/16 inch.
E. Carrying Channels: ASTM C754, shall be cold-formed from steel sheet with a base-metal thickness of 0.0538 inch and minimum 1/2-inch- wide flanges.
1. Depth: As indicated on Drawings or 1-1/2 inches
F. Furring Channels (Furring Members):
1. Steel Studs: ASTM C 645.
a. Basis-of-Design Product: Subject to compliance with structural design requirements, Dietrich Metal Framing Ultra STEEL® 2S gauge-equivalent; Dietrich Metal Framing Ultra STEEL® 20 gauge-equivalent
b. Minimum Base-Metal Thickness: As indicated on Drawings or 0.0296 inch thickness.
1) Depth: As indicated on Drawings or1-5/8 inches, 2-1/2 inches, 3-5/8 inches, 4 inches, or 6 inches depth.
1. Hat-Shaped, Rigid Furring Channels: ASTM C 645, 7/8 inch or1-1/2 inches deep.
a. Minimum Base Metal Thickness: As indicated on Drawings or 0.0296 inch thickness.
2. Resilient Furring Channels: 1/2-inch- deep members designed to reduce sound transmission.
a. Basis-of-Design Product: Subject to compliance with requirements listed in plans, or, Dietrich Metal Framing; RC Deluxe Resilient Channel
b. Configuration: Asymmetrical.
G. Grid Suspension System for Ceilings: ASTM C 645, direct-hung system composed of main beams and cross-furring members that interlock.
1. Available Products: Subject to compliance with requirements, products that may be incorporated into the Work include, but are not limited to, the following:
2. Products: Subject to compliance with requirements, provide one of the following:
a. Armstrong World Industries, Inc.; Drywall Grid Systems.
b. Chicago Metallic Corporation; Fire Front 650-C Drywall Furring System.
c. USG Corporation; Drywall Suspension System.
d. Or Manufacture listed in Plans.
2.3 STEEL FRAMING FOR FRAMED ASSEMBLIES
A. Steel Studs and Runners: ASTM C 645.
1. Basis-of-Design Product: Subject to compliance with requirements listed in plans or, Dietrich Metal Framing Ultra STEEL® 2S gauge-equivalent; Dietrich Metal Framing Ultra STEEL® 20 gauge-equivalent.
2. Minimum Base-Metal Thickness: As indicated on Drawings or 0.0296 inch thickness.
3. Size: 3-5/8 inches, 4 inches, 6 inches or as indicated on Drawings.
B. Slip-Type Head Joints: Where indicated, provide one of the following:
1. Single Long-Leg Runner System: ASTM C 645 top runner with 2-inch- deep flanges in thickness not less than indicated for studs, installed with studs friction fit into top runner and with continuous bridging or cold rolled channel with clip angles or Dietrich Spazzer® 9200 Bridging and Bracing Bar located within 12 inches of the top of studs to provide lateral bracing.
2. Double-Runner System: ASTM C 645 top runners, inside runner with 2-inch- deep flanges in thickness not less than indicated for studs and fastened to studs, and outer runner sized to friction fit inside runner.
3. Deflection Track: Steel sheet top runner manufactured to prevent cracking of finishes applied to interior partition framing resulting from deflection of structure above; in thickness not less than indicated for studs and in width to accommodate depth of studs.
a. Basis-of-Design Product: Subject to compliance with requirements listed in plans, or, Dietrich Metal Framing; SLP-TRK® Slotted Deflection Track, or a comparable product.
b. Or other manufacture approve by submittal to Architect for approval
C. Firestop Track: As specified in Division 7 Section "Fire-Resistive Joint Systems." Top runner designed to allow partition head to move while maintaining integrity of assembly fire-resistance rating. Thickness not less than indicated for studs and of width to accommodate depth of studs.
1. Basis-of-Design Product: Subject to compliance with requirements listed in plans, or, Dietrich Metal Framing; SLP-TRK® Slotted Deflection Track.
D. Flat Strap and Backing Plate: Sheet for blocking and bracing in length and width indicated.
1. Minimum Base-Metal Thickness: As indicated on Drawings or 0.0296 inch.
2. Basis-of-Design Product: Subject to compliance with requirements listed in plans, or, Dietrich Metal Framing; Danback Fire Treated Wood Backing Plate, Danback Fire Treated Wood Backing Plate D24F. Channel Bridging: 0.0538-inch bare-steel thickness, with minimum 1/2-inch- wide flanges.
3. Basis-of-Design Product: Subject to compliance with requirements listed in plans, or, Dietrich Metal Framing; Bridging and Spacing Bar .
4. Depth: As indicated on Drawings or 1-1/2 inches.
5. Clip Angle: Subject to compliance with requirements, with requirements listed in plans, or, Dietrich Metal Framing; Easy Clip U-Series Clip Angle U545 or not less than 1-1/2 by 1-1/2 inches, 0.0538-inch- thick, galvanized steel.
E. Hat-Shaped, Rigid Furring Channels: ASTM C 645.
1. Minimum Base Metal Thickness: As indicated on Drawings or 0.0296 inch thickness.
2. Depth: As indicated on Drawings or 7/8 inch or1-1/2 inches
F. Resilient Furring Channels: 1/2-inch- deep, steel sheet members designed to reduce sound transmission.
1. Basis-of-Design Product: Subject to compliance with requirements listed in plans, or, provide Dietrich Metal Framing; Resilient Channel or as indicated on structural drawings.
2. Configuration: Asymmetrical.
G. Carrying Channels: 0.0538-inch bare-steel thickness, with minimum 1/2-inch- wide flanges.
1. Depth: As indicated on Drawings or 3/4 inch, 1-1/2 inch, or 2 inch.
2. Furring Brackets: Adjustable, corrugated-edge type of steel sheet with minimum bare-steel thickness of 0.0296 inch.
3. Tie Wire: ASTM A 641/A 641M, Class 1 zinc coating, soft temper, 0.0625-inch- diameter wire, or double strand of 0.0475-inch- diameter wire.
H. Z-Shaped Furring: With slotted or non-slotted web, face flange of 1-1/4 inches, wall attachment flange of 7/8 inch, minimum bare-metal thickness of 0.0179 inch, and depth required to fit insulation thickness indicated.
I. Radius Framing: Steel sheet runner for non-structural curves, bends, variable radii and arches. Designed to provide higher strength capacity than conventional lighter gauge material by using a work-hardened steel base strip.
1. Basis-of-Design Product: Subject to compliance with requirements listed in plans, or, Dietrich Metal Framing; Ultra STEEL® Framing Contour Track CNTB or Architect approved equal.
2. Minimum Base-Metal Thickness: As indicated on Drawings or 0.0296 inch.
3. Size: 3-5/8 inches or as indicated on Drawings.
2.4 AUXILIARY MATERIALS
A. General: Provide auxiliary materials that comply with referenced installation standards.
1. Fasteners for Metal Framing: Of type, material, size, corrosion resistance, holding power, and other properties required to fasten steel members to substrates.
B. Isolation Strip at Exterior Walls: Provide one of the following:
1. Asphalt-Saturated Organic Felt: ASTM D 226, Type I (No. 15 asphalt felt), no perforated.
2. Foam Gasket: Adhesive-backed, closed-cell vinyl foam strips that allow fastener penetration without foam displacement, 1/8 inch thick, in width to suit steel stud size.
PART 3 - EXECUTION
3.1 EXAMINATION
A. Examine areas and substrates, with Installer present, and including welded hollow-metal frames, cast-in anchors, and structural framing, for compliance with requirements and other conditions affecting performance.
1. Proceed with installation only after unsatisfactory conditions have been corrected.
3.2 PREPARATION
A. Suspended Assemblies: Coordinate installation of suspension systems with installation of overhead structure to ensure that inserts and other provisions for anchorages to building structure have been installed to receive hangers at spacing required to support the Work and that hangers will develop their full strength.
1. Furnish concrete inserts and other devices indicated to other trades for installation in advance of time needed for coordination and construction.
B. Coordination with Sprayed Fire-Resistive Materials:
1. Before sprayed fire-resistive materials are applied, attach offset anchor plates or ceiling runners (tracks) to surfaces indicated to receive sprayed fire-resistive materials. Where offset anchor plates are required, provide continuous plates fastened to building structure not more than 24 inches o.c.
2. After sprayed fire-resistive materials are applied, remove them only to extent necessary for installation of non-load-bearing steel framing. Do not reduce thickness of fire-resistive materials below that required for fire-resistance ratings indicated. Protect adjacent fire-resistive materials from damage.
3.3 INSTALLATION, GENERAL
A. Installation Standard: comply with ASTM C 754.
1. Gypsum Plaster Assemblies: Also, comply with requirements in ASTM C 841 that apply to framing installation.
2. Portland Cement Plaster Assemblies: Also, comply with requirements in ASTM C 1063 that apply to framing installation.
3. Gypsum Veneer Plaster Assemblies: Also, comply with requirements in ASTM C 844 that apply to framing installation.
4. Gypsum Board Assemblies: Also, comply with requirements in ASTM C 840 that apply to framing installation.
B. Install supplementary framing, and blocking to support fixtures, equipment services, heavy trim, grab bars, toilet accessories, furnishings, or similar construction.
C. Install bracing at terminations in assemblies.
D. Do not bridge building control and expansion joints with non-structural steel framing members. Frame both sides of joints independently.
3.4 INSTALLING SUSPENSION SYSTEMS
A. Install suspension system components in sizes and spacing indicated on Drawings, but not less than those required by referenced installation standards for assembly types and other assembly components indicated.
B. Isolate suspension systems from building structure where they abut or are penetrated by building structure to prevent transfer of loading imposed by structural movement.
C. Suspend hangers from building structure as follows:
1. Install hangers plumb and free from contact with insulation or other objects within ceiling plenum that are not part of supporting structural or suspension system.
a. Splay hangers only where required to miss obstructions and offset resulting horizontal forces by bracing, counter splaying, or other equally effective means.
2. Where width of ducts and other construction within ceiling plenum produces hanger spacing that interfere with locations of hangers required to support standard suspension system members, install supplemental suspension members and hangers in the form of trapezes or equivalent devices.
a. Size supplemental suspension members and hangers to support ceiling loads within performance limits established by referenced installation standards
3. Wire Hangers: Secure by looping and wire tying, either directly to structures or to inserts, eye screws, or other devices and fasteners that are secure and appropriate for substrate, and in a manner that will not cause hangers to deteriorate or otherwise fail.
4. Flat Hangers: Secure to structure, including intermediate framing members, by attaching to inserts, eye screws, or other devices and fasteners that are secure and appropriate for structure and hanger, and in a manner that will not cause hangers to deteriorate or otherwise fail.
D. Fire-Resistance-Rated Assemblies: Wire tie furring channels to supports.
E. Seismic Bracing: Sway-brace suspension systems with hangers used for support
F. Grid Suspension Systems: Attach perimeter wall track or angle where grid suspension systems meet vertical surfaces. Mechanically join main beam and cross-furring members to each other and butt-cut to fit into wall track.
G. Installation Tolerances: Install suspension systems that are level to within 1/8 inch in 12 feet measured lengthwise on each member that will receive finishes and transversely between parallel members that will receive finishes.
3.5 INSTALLING FRAMED ASSEMBLIES
A. Where studs are installed directly against exterior masonry walls or dissimilar metals at exterior walls, install isolation strip between studs and exterior wall.
B. Install studs so flanges within framing system point in same direction.
C. Install tracks (runners) at floors and overhead supports. Extend framing full height to structural supports or substrates above suspended ceilings, except where partitions are indicated to terminate at suspended ceilings. Continue framing around ducts penetrating partitions above ceiling.
1. Slip-Type Head Joints: Where framing extends to overhead structural supports, install to produce joints at tops of framing systems that prevent axial loading of finished assemblies.
2. Door Openings: Screw vertical studs at jambs to jamb anchor clips on door frames; install runner track section (for cripple studs) at head and secure to jamb studs.
a. Install two studs at each jamb, unless otherwise indicated.
b. Install cripple studs at head adjacent to each jamb stud, with a minimum 1/2-inch clearance from jamb stud to allow for installation of control joint in finished assembly.
c. Extend jamb studs through suspended ceilings and attach to underside of overhead structure.
3. Other Framed Openings: Frame openings other than door openings the same as required for door openings, unless otherwise indicated. Install framing below sills of openings to match framing required above door heads.
4. Fire-Resistance-Rated Partitions: Install framing to comply with fire-resistance-rated assembly indicated and support closures and to make partitions continuous from floor to underside of solid structure.
a. Firestop Track: Where indicated, install to maintain continuity of fire-resistance-rated assembly indicated.
5. Sound-Rated Partitions: Install framing to comply with sound-rated assembly indicated.
6. Curved Partitions:
a. Bend track to uniform curve and locate straight lengths so they are tangent to arcs.
b. Begin and end each arc with a stud, and space intermediate studs equally along arcs. On straight lengths of not less than 2 studs at ends of arcs, place studs 6 inches o.c.
D. Direct Furring:
1. Screw to wood framing.
2. Attach to concrete or masonry with stub nails, screws designed for masonry attachment, or powder-driven fasteners spaced 24 inches o.c.
E. Z-Furring Members:
1. Erect insulation (specified in Division 7 Section "Building Insulation") vertically and hold in place with Z-furring members spaced 24 inches o.c.
2. Except at exterior corners, securely attach narrow flanges of furring members to wall with concrete stub nails, screws designed for masonry attachment, or powder-driven fasteners spaced 24 inches o.c.
F. Installation Tolerance: Install each framing member so fastening surfaces vary not more than 1/8 inch from the plane formed by faces of adjacent framing.

FIELD COPY

TECHNE
DESIGN | DEVELOPMENT
3956 30th Street, San Diego, CA 92104
techne-us.com sustainablearchitect.org
o 619-940-5814 m 313-595-5814

CONSULTANTS

LICENSED ARCHITECT
MICHAEL RENE MORTON
C-19371
REN. 04/30/2015
STATE OF CALIFORNIA

414 29th Avenue
Oakland, CA 94601

OWNER

29th Avenue Group, LLC
1211 Embarcadero Way, Suite D
Oakland, CA 94606

BuildZig
Dream it. Build it. Zig it.

MARK	DATE	DESCRIPTION
01	11.10.14	1st Building Permit Submittal
02	02.23.15	2nd Building Permit Submittal

2/22/2015 6:02:57 PM
PROJECT NO: 1410
CAD DWG FILE: G001 COVER SHEET.DWG
DRAWN BY: A.S, M.M., J.C., J.S.
CHK'D BY: A.S., M.M

COPYRIGHT: TECHNE expressly reserves its common law copyright and other property rights in this document. This document shall not be reproduced, copied, changed or disclosed in any form or manner whatsoever without first obtaining the express written consent of TECHNE.

SHEET TITLE
GENERAL CONDITIONS / SPECIFICATIONS

G005

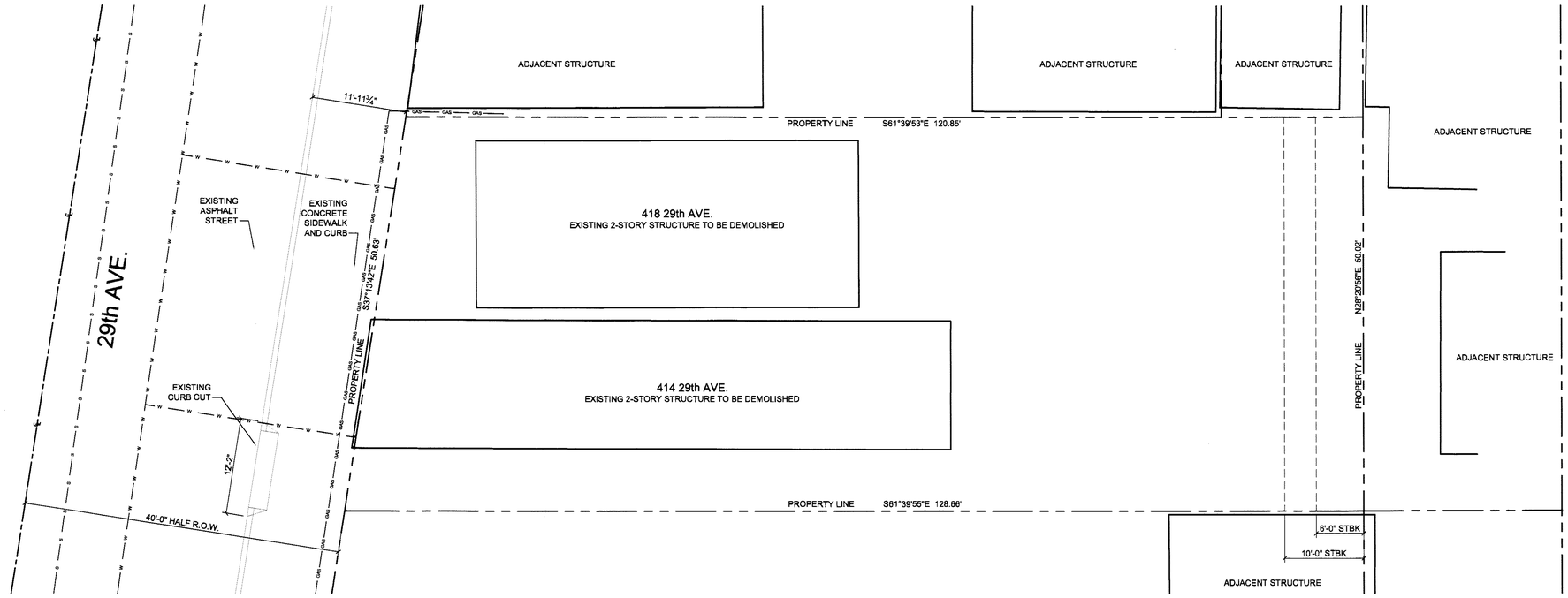

1 SITE PLAN - EXISTING
SCALE: 1/8" = 1'-0"

0 4' 8' 16'
SCALE: 1/8" = 1'-0"

N

PROJ. N

APPROVED
CITY OF OAKLAND
BUILDING SERVICES
NOT CHECKED

SITE PLAN NOTES

A. The site plan is for informational and general site reference only. Refer to other construction documents for complete scope of work.
B. Before commencing any site foundation or slab cutting or excavation, the contractor shall verify and mark locations of all site utilities, dimensions and conditions. These include but are not limited to property lines, setback location to all new or existing walls, easements (if any), existing site utilities, including water, sewer, gas and electrical lines and any other new or existing site items which could affect in any way the construction of the building. Flag or otherwise mark all locations of site property lines, easements (if any), underground utilities, and indicate utility type.
C. The Contractor or subcontractor shall notify TECHNE if any conflicts or discrepancy occurs between the information on this plan and actual field conditions. Do not proceed with work in conflict with these drawing until written or verbal instructions are issued by the Architect's office.
D. Protect and mark all existing building structure including walls, beams, columns, area separation walls, and other items that are part of the existing structure and not part of the scope of the tenant improvement, and mark perimeter of construction zone.
E. Coordinate with other tenants the temporary shutoff of any site utilities.
F. Refer to Topographic Survey for additional information.

SITE PLAN LEGEND

- PROPERTY LINE
- OUTLINE OF EXISTING STRUCTURES
- AREA OF EXISTING LANDSCAPE
- AREA OF EASEMENT
- AREA OF EXISTING HARDSCAPE
- SITE DRAINAGE PATTERN
- GAS MAIN
- SEWER MAIN
- WATER MAIN

FIELD COPY

TECHNE
DESIGN | DEVELOPMENT
3956 30th Street, San Diego, CA 92104
techne-us.com sustainablearchitect.org
o 619-940-5814 m 313-595-5814

CONSULTANTS

LICENSED ARCHITECT
MICHAEL RENE MORTON
C-19371
REN. 04/30/2015
STATE OF CALIFORNIA

414 29th Avenue
Oakland, CA 94601

OWNER

29th Avenue Group, LLC
1211 Embarcadero Way, Suite D
Oakland, CA 94606

BuildZig
Dream it. Build it. Zig it.

MARK	DATE	DESCRIPTION
01	11.10.14	1st Building Permit Submittal
02	02.23.15	2nd Building Permit Submittal

1/28/2015 2:57:10 PM

PROJECT NO: 1410
CAD DWG FILE: A101 - SITE PLAN - EXISTING.DWG
DRAWN BY: A.S, M.M., J.C., J.S.
CHK'D BY: A.S., M.M

COPYRIGHT: TECHNE expressly reserves its common law copyright and other property rights in this document. This document shall not be reproduced, copied, changed or disclosed in any form or manner whatsoever without first obtaining the express written consent of TECHNE.

SHEET TITLE
SITE PLAN - EXISTING

A101
SHEET -- OF 100

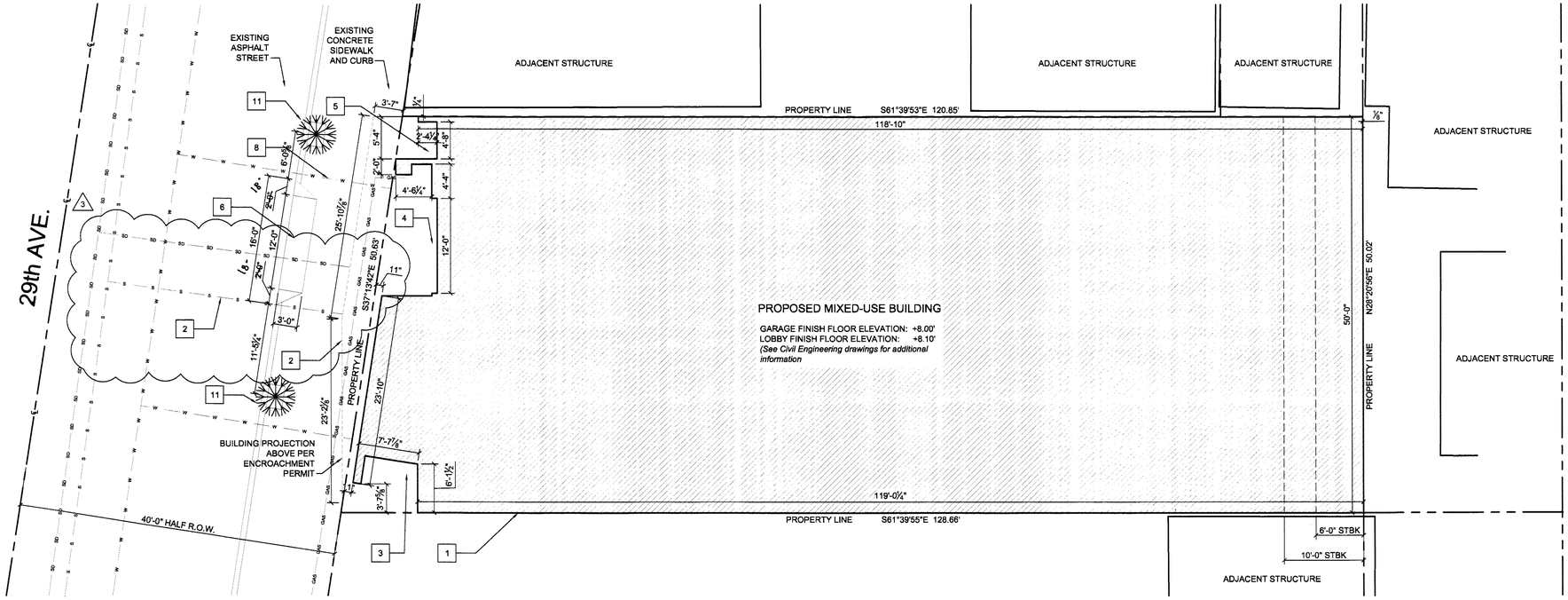

1 SITE PLAN - PROPOSED
SCALE: 1/8" = 1'-0"

0 4' 8' 16'
SCALE: 1/8" = 1'-0"

N

PROJ. N

APPROVED
CITY OF OAKLAND
PLANNING SERVICES
NOT CHECKED

DESIGNER'S STATEMENT

I hereby state that to the best of my knowledge all provisions of applicable State laws and local ordinances have been fully satisfied.

I hereby further state that all proposed grades, elevations, and contours delineated upon this plot plan are based upon a boundary survey by MICHAEL J. FOSTER, L.S. 7170 dated 08/27/14 and a topographic survey by DONNA MARIE DE SOUZA, P.L.S 7763 dated April, 2007 that were indicated thereon by the surveyors thereof as being based upon City of Oakland datum.

_____ Date: _____

Title: Architect of Record

License Number: C-19371 Expires: 04/30/2015

SITE PLAN NOTES

A. The site plan is for informational and general site reference only. Refer to other construction documents for complete scope of work.
B. Before commencing any site foundation or slab cutting or excavation, the contractor shall verify and mark locations of all site utilities, dimensions and conditions. These include but are not limited to property lines, setback location to all new or existing walls, easements (if any), existing site utilities, including water, sewer, gas and electrical lines and any other new or existing site items which could affect in any way the construction of the building. Flag or otherwise mark all locations of site property lines, easements (if any), underground utilities, and indicate utility type.
C. The Contractor or subcontractor shall notify TECHNE if any conflicts or discrepancy occurs between the information on this plan and actual field conditions. Do not proceed with work in conflict with these drawing until written or verbal instructions are issued by the Architect's office.
D. The outline and the exact location of the proposed structures and improvements shall be determined and laid out by a Registered Civil Engineer prior to start of construction.
E. Refer to Topographic Survey for additional information.

SITE PLAN LEYNOTES

1. OUTLINE OF NEW MIXED-USE BUILDING
2. PROJECTION OF NEW MIXED-USE BUILDING INTO RIGHT OF WAY PER NEW RIGHT OF WAY PERMIT
3. BUILDING MAIN ENTRY
4. PARKING GARAGE ENTRY
5. EMERGENCY EXIT
6. NEW CURB CUT AND DRIVEWAY - SEE CIVIL ENGINEERING DRAWINGS

UTILITIES

7. ELECTRICAL METER LOCATION - SEE ELECTRICAL ENGINEERING DRAWINGS.
8. WATER METER LOCATION - SEE PLUMBING ENGINEERING DRAWINGS.
9. SEWER LINE LOCATION - SEE PLUMBING ENGINEERING DRAWINGS.
10. GAS METER LOCATION - SEE PLUMBING ENGINEERING DRAWINGS.

SITE ELEMENTS

11. Cercis Canadensis (Eastern Redbud) planted in 2'x3' well. Irrigation system shall be on timer (drip type). Installation shall be per City of Oakland standards.

SITE PLAN LEGEND

- PROPERTY LINE
- OUTLINE OF EXISTING STRUCTURES
- AREA OF EXISTING LANDSCAPE
- AREA OF EASEMENT
- AREA OF EXISTING HARDSCAPE
- SITE DRAINAGE PATTERN
- GAS MAIN
- SEWER MAIN
- WATER MAIN

FIELD COPY

TECHNE
DESIGN | DEVELOPMENT
3956 30th Street, San Diego, CA 92104
techne-us.com sustainablearchitect.org
o 619-940-5814 m 313-595-5814

CONSULTANTS

LICENSED ARCHITECT
MICHAEL RENE MORTON
C-19371
REN. 04/30/2015
STATE OF CALIFORNIA

414 29th Avenue
Oakland, CA 94601

OWNER

29th Avenue Group, LLC
1211 Embarcadero Way, Suite D
Oakland, CA 94606

BuildZig
Dream it. Build it. Zig it.

MARK	DATE	DESCRIPTION
01	11.10.14	1st Building Permit Submittal
02	02.23.15	2nd Building Permit Submittal
03	03.13.15	3rd Building Permit Submittal
04	04.02.15	Elevator Revision
05	04.09.15	Permit Set

4/9/2015 9:30:34 AM

PROJECT NO: 1410
CAD DWG FILE: A102 - SITE PLAN - PROPOSED.DWG
DRAWN BY: A.S, M.M., J.C., J.S.
CHK'D BY: A.S., M.M

COPYRIGHT: TECHNE expressly reserves its common law copyright and other property rights in this document. This document shall not be reproduced, copied, changed or disclosed in any form or manner whatsoever without first obtaining the express written consent of TECHNE.

SHEET TITLE
SITE PLAN - PROPOSED

A102
SHEET -- OF 100

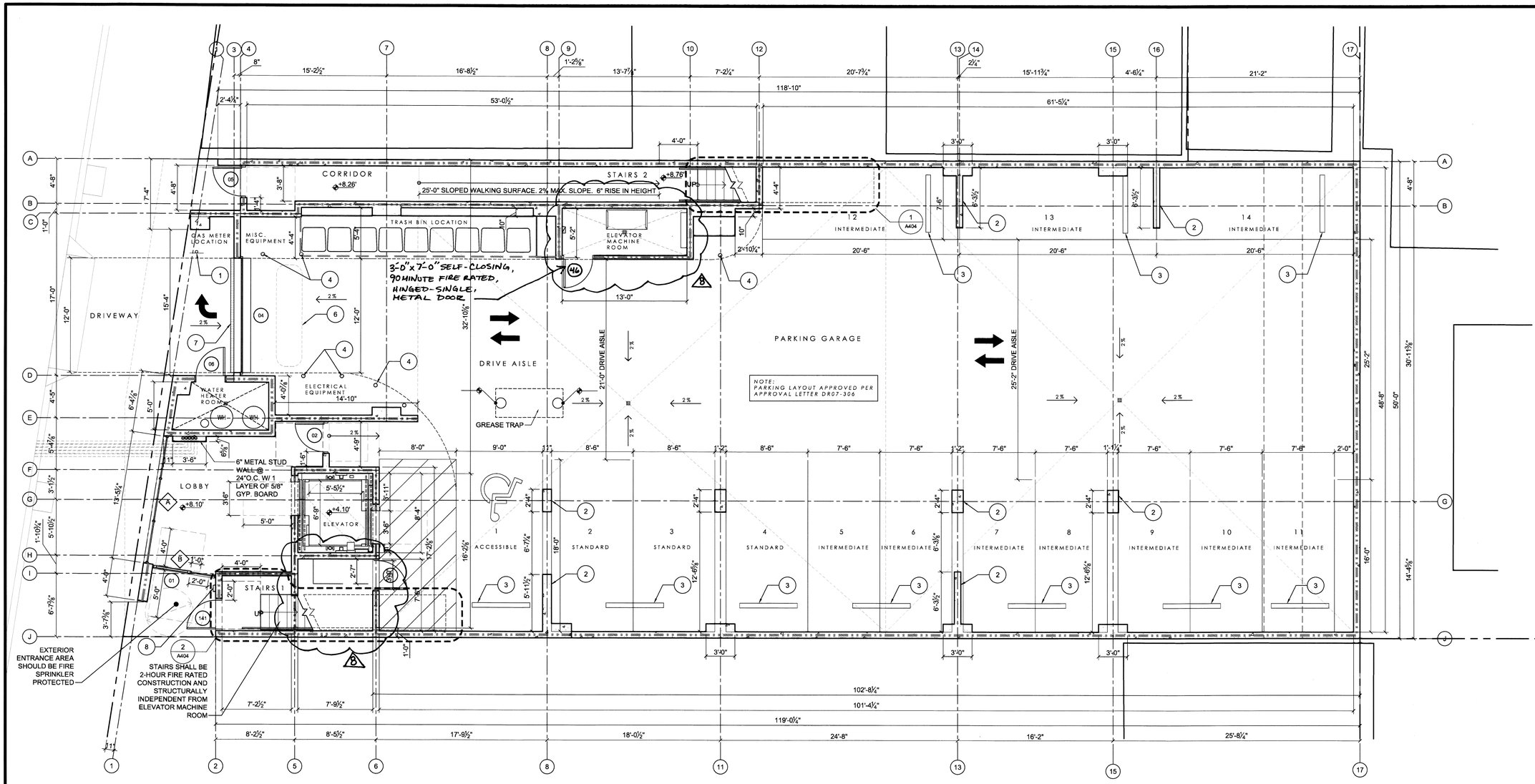

1 FIRST FLOOR PLAN - PROPOSED
SCALE: 3/16" = 1'-0"

0 2'-8" 5'-4" 10'-8"
SCALE: 3/16" = 1'-0"

N

FLOOR PLAN KEYNOTES

1. RIGHT TURN ONLY SIGN - 12" x 18" min. size. Per Detail: 8/A501
2. METAL COLUMN/WALL CORNER PROTECTOR - ¼" thick min. Extend 24" up wall/column edge.
3. PARKING WHEEL STOP
4. SAFETY BOLLARD: 4½" diameter, 36" tall. Grainger or similar.
5. ELEVATOR MACHINE ROOM ACCESS LADDER.
6. INDUCTIVE LOOP VEHICLE DETECTOR
7. Linear drain per civil engineering drawings.
8. INTERCOM SYSTEM. Controls shall be 40" A.F.F.

FLOOR PLAN NOTES

A. The General Contractor or Sub-Contractor shall verify all conditions or dimensions on these plans in the field with actual site conditions.
B. Written dimensions shall take precedence over scaled dimensions and shall be verified on the job site. On-site verification of all dimensions and conditions shall be the sole responsibility of the General Contractor and Sub-Contractors.
C. The Contractor or sub-contractor shall notify TECHNE if any conflicts or discrepancy occurs between this information on this plan and actual field conditions.
D. Any discrepancies with this drawing affecting project layout shall be brought to the attention of TECHNE. Do not proceed with work until written or verbal instructions are issued by TECHNE.
E. INSULATION: R-15 Batt Insulation at all Exterior 2 X 4 Walls.
R-15 Batt Insulation at all accessible Interior walls for sound control.
R-30 Batt Insulation at 2 X 10 Ceiling, Raised Floor & Roof Areas.
R-4.5 Insulation Wrap on all New Hot Water Piping.
R-4.5 Insulation Wrap on all New Supply Ducts.
F. SMOKE DETECTORS: Shall be installed in each bedroom, in access points to each sleeping area and in each story and basements. Detector shall have an alarm audible in all sleeping areas of the unit. Smoke alarms are required to be interconnected in such a manner that the activation of an alarm will activate all the alarms in the individual unit. Units shall be permanently wired to the building wiring and equipped with battery backup.
G. SHOWER COMPARTMENTS: Shower compartments and bathtubs with installed shower heads shall be finished with a nonabsorbent surface that extends to a height of not less than 6 feet above the floor. *CRC R307.2*

DIMENSIONS

- EXTERIOR WALL DIMENSIONS TO FACE OF FINISH (U.N.O.)
- INTERIOR WALL DIMENSIONS TO CENTER LINE OF STUD (U.N.O.)
- CLEARANCE DIMENSIONS ARE TO FACE OF FINISH MATERIALS, NOTED WITH CLR.

FLOOR PLAN LEGEND

1-HOUR FIRE RATED EXTERIOR WALL: 2x4 wood stud @ 16" O.C. with 1 layer of ⅝" Type X gypsum board inside, ⅝" sheathing + ⅞" stucco on outside. Per CBC 2013 Table 721.1(2) Item Number 15-1.3.

INTERIOR WALL: 2X4 wood stud @ 16" O.C. with 1 layer of ⅝" gypsum board on each side.

1 HOUR FIRE RATED INTERIOR WALL: 2X wood stud @ 16" O.C. with 1 layer of ⅝" type X gypsum board on each side.

2- HOUR FIRE-RATED EXTERIOR WALL: 2x6 wood stud @ 16" O.C. with 1 layer of ⅝" Type X gypsum board inside, ⅝" sheathing + ⅞" stucco on outside. Per CBC 2013 Table 721.1(2) Item Number 15-1.3.

2- HOUR FIRE-RATED INTERIOR WALL: 2x6 wood stud @ 16" O.C. with 2 layers of ⅝" Type X gypsum board on each side. Per CBC 2013 Table 721.1(2) Item Number 14-1.5.

2- HOUR FIRE-RATED INTERIOR WALL: 2x4 wood stud @ 16" O.C. with 2 layers of ⅝" Type X gypsum board on each side. Per CBC 2013 Table 721.1(2) Item Number 14-1.5.

1- HOUR FIRE-RATED EXTERIOR WALL: 2x6 wood stud @ 16" O.C. with ⅝" sheathing + ⅞" stucco on each side. Per CBC 2013 Table 721.1(2) Item Number 15-1.2.

2 HOUR FIRE RATED WALL: 8" Reinforced Concrete. Per CBC 2013 Table 721.1(2) Item Number 4-1.1

2 HOUR FIRE RATED WALL: 8" Concrete Masonry Unit, grouted solid. Per CBC 2013 Table 721.1(2) Item Number 3-1.1, 3-1.2, 3-1.3 and 3-1.4.

WALL OPENING: 80" high u.n.o. Finished with ⅝" gypsum board with square corners.

35½" U.N.O.
03
DOOR AND SYMBOL. See door schedule for complete information

1
WINDOW AND SYMBOL. See window schedule for complete information

CITY OF OAKLAND
PLAN REVISION

INITIALS	DEPARTMENT	DATE
	BUILDING INSPECTION	
	PLUMBING/MECHANICAL	
	ELECTRICAL	
	ZONING/DESIGN REVIEW	
	FIRE MARSHAL	
	ENGINEERING	
	OTHER	
	PLAN CHECK	

TECHNE
DESIGN | DEVELOPMENT
3956 30th Street, San Diego, CA 92104
techne-us.com sustainablearchitect.org
o 619-940-5814 m 313-595-5814

CONSULTANTS

LICENSED ARCHITECT
MICHAEL RENE MORTON
C-19371
REN. 04/30/2017
STATE OF CALIFORNIA
11/2/2015

414 29th Avenue
Oakland, CA 94601

OWNER

29th Avenue Group, LLC
1211 Embarcadero Way, Suite D
Oakland, CA 94606

BuildZig
Dream it. Build it. Zig it.

MARK	DATE	DESCRIPTION
04	04.02.15	Elevator Revision
05	04.09.15	Permit Set
06	08.19.15	Window Changes
07	10.06.15	Unit 1 Entry Door Relocation
08	10.27.15	Window Changes

11/4/2015 1:08:49 PM

PROJECT NO: 1410
CAD DWG FILE: A103 - FIRST FLOOR PLAN - PROPOSED - REVISED.DWG
DRAWN BY: A.S, M.M., J.C., J.S.
CHK'D BY: A.S., M.M

COPYRIGHT: TECHNE expressly reserves its common law copyright and other property rights in this document. This document shall not be reproduced, copied, changed or disclosed in any form or manner whatsoever without first obtaining the express written consent of TECHNE.

SHEET TITLE
FIRST FLOOR PLAN - PROPOSED

A103

SHEET -- OF 100

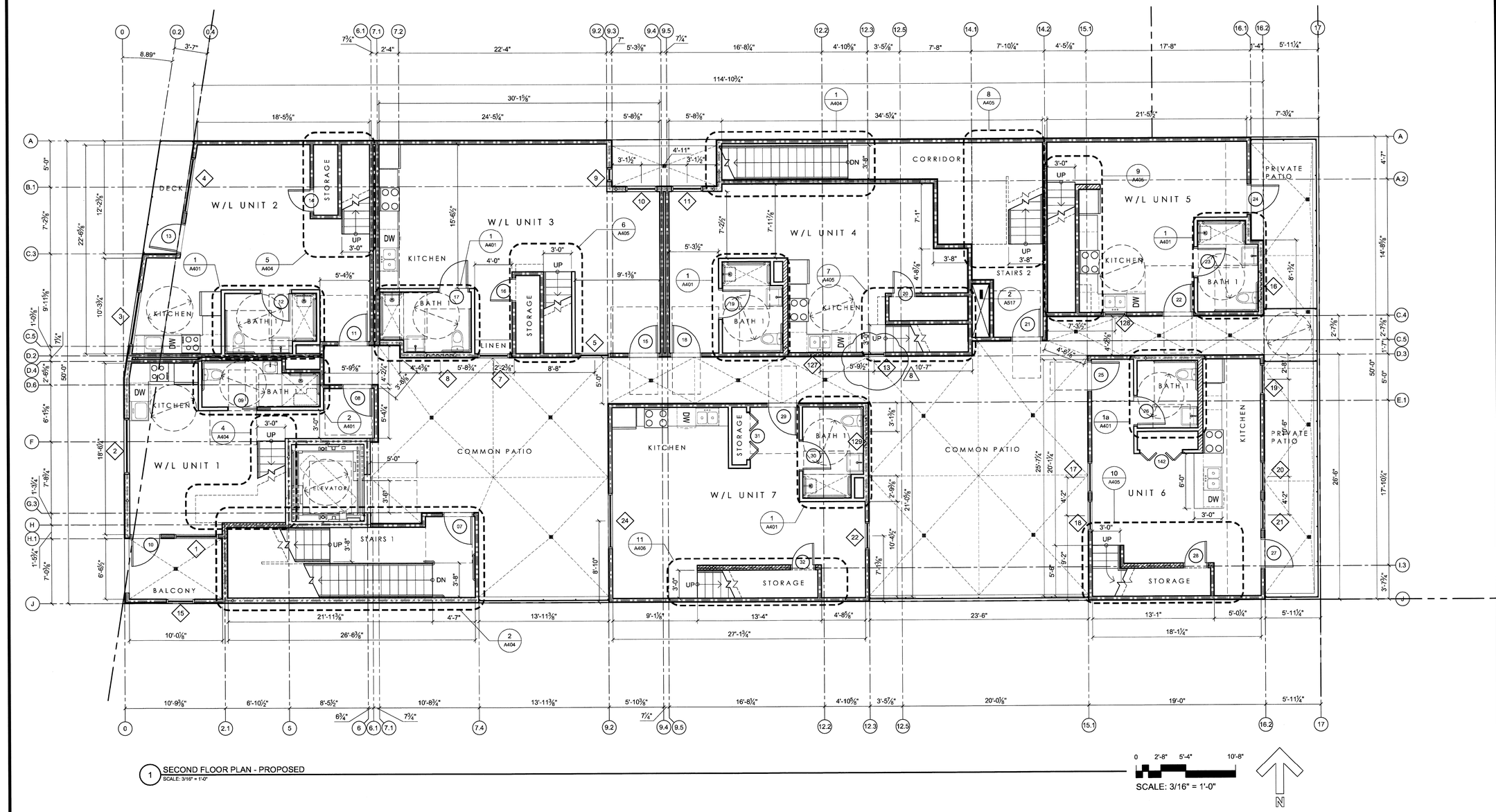

1 SECOND FLOOR PLAN - PROPOSED
SCALE: 3/16" = 1'-0"

FLOOR PLAN NOTES

A. The General Contractor or Sub-Contractor shall verify all conditions or dimensions on these plans in the field with actual site conditions.
B. Written dimensions shall take precedence over scaled dimensions and shall be verified on the job site. On-site verification of all dimensions and conditions shall be the sole responsibility of the General Contractor and Sub-Contractors.
C. The Contractor or sub-contractor shall notify TECHNE if any conflicts or discrepancy occurs between this information on this plan and actual field conditions.
D. Any discrepancies with this drawing affecting project layout shall be brought to the attention of TECHNE. Do not proceed with work until written or verbal instructions are issued by TECHNE.
E. INSULATION: R-15 Batt Insulation at all Exterior 2 X 4 Walls.
R-15 Batt Insulation at all accessible interior walls for sound control.
R-30 Batt Insulation at 2 X 10 Ceiling, Raised Floor & Roof Areas.
R-4.5 Insulation Wrap on all New Hot Water Piping.
R-4.5 Insulation Wrap on all New Supply Ducts.
F. SMOKE DETECTORS: Shall be installed in each bedroom, in access points to each sleeping area and in each story and basements. Detector shall have an alarm audible in all sleeping areas of the unit. Smoke alarms are required to be interconnected in such a manner that the activation of an alarm will activate all the alarms in the individual unit. Units shall be permanently wired to the building wiring and equipped with battery backup.
G. SHOWER COMPARTMENTS: Shower compartments and bathtubs with installed shower heads shall be finished with a nonabsorbent surface that extends to a height of not less than 6 feet above the floor. *CRC R307.2*

DIMENSIONS

- EXTERIOR WALL DIMENSIONS TO FACE OF FINISH (U.N.O.)
- INTERIOR WALL DIMENSIONS TO CENTER LINE OF STUD (U.N.O.)
- CLEARANCE DIMENSIONS ARE TO FACE OF FINISH MATERIALS, NOTED WITH CLR.

FLOOR PLAN LEGEND

1-HOUR FIRE RATED EXTERIOR WALL: 2x4 wood stud @ 16" O.C. with 1 layer of ⅝" Type X gypsum board inside, ⅜" sheathing + ⅞" stucco on outside. Per CBC 2013 Table 721.1(2) Item Number 15-1.3.

INTERIOR WALL: 2X4 wood stud @ 16" O.C. with 1 layer of ⅝" gypsum board on each side.

1 HOUR FIRE RATED INTERIOR WALL: 2X wood stud @ 16" O.C. with 1 layer of ⅝" type X gypsum board on each side.

2- HOUR FIRE-RATED EXTERIOR WALL: 2x6 wood stud @ 16" O.C. with 1 layer of ⅝" Type X gypsum board inside, ⅜" sheathing + ⅞" stucco on outside. Per CBC 2013 Table 721.1(2) Item Number 15-1.3.

2- HOUR FIRE-RATED INTERIOR WALL: 2x6 wood stud @ 16" O.C. with 2 layers of ⅝" Type X gypsum board on each side. Per CBC 2013 Table 721.1(2) Item Number 14-1.5.

2- HOUR FIRE-RATED INTERIOR WALL: 2x4 wood stud @ 16" O.C. with 2 layers of ⅝" Type X gypsum board on each side. Per CBC 2013 Table 721.1(2) Item Number 14-1.5.

1- HOUR FIRE-RATED EXTERIOR WALL: 2x6 wood stud @ 16" O.C. with ⅜" sheathing + ⅞" stucco on each side. Per CBC 2013 Table 721.1(2) Item Number 15-1.2.

2 HOUR FIRE RATED WALL: 8" Reinforced Concrete. Per CBC 2013 Table 721.1(2) Item Number 4-1.1

2 HOUR FIRE RATED WALL: 8" Concrete Masonry Unit, grouted solid. Per CBC 2013 Table 721.1(2) Item Number 3-1.1, 3-1.2, 3-1.3 and 3-1.4.

WALL OPENING: 80" high u.n.o. Finished with ⅝" gypsum board with square corners.

3⅝" U.N.O.
03
DOOR AND SYMBOL. See door schedule for complete information

1
WINDOW AND SYMBOL. See window schedule for complete information

CITY OF OAKLAND
PLAN REVISION

INITIALS	DEPARTMENT	DATE
	BUILDING INSPECTION	
	PLUMBING/MECHANICAL	
	ELECTRICAL	
NC	ZONING/DESIGN REVIEW	11/17/15
	FIRE MARSHAL	
	ENGINEERING	
	OTHER	
	PLAN CHECK	

TECHNE
DESIGN | DEVELOPMENT
3956 30th Street, San Diego, CA 92104
techne-us.com sustainablearchitect.org
o 619-940-5814 m 313-595-5814

CONSULTANTS

LICENSED ARCHITECT
MICHAEL RENE TORTON
C-19371
REN. 04/30/2017
STATE OF CALIFORNIA
11/20/2015

414 29th Avenue
Oakland, CA 94601

OWNER

29th Avenue Group, LLC
1211 Embarcadero Way, Suite D
Oakland, CA 94606

BuildZig
Dream it. Build it. Zig it.

MARK	DATE	DESCRIPTION
D4	04.02.15	Elevator Revision
D5	04.09.15	Permit Set
D6	08.19.15	Window Changes
D7	10.06.15	Unit 1 Entry Door Relocation
D8	10.27.15	Window Changes

10/27/2015 12:09:04 PM

PROJECT NO: 1410
CAD DWG FILE: A104 - SECOND FLOOR PLAN - PROPOSED - REVISED.DWG
DRAWN BY: A.S, M.M., J.C., J.S.
CHK'D BY: A.S., M.M

COPYRIGHT: TECHNE expressly reserves its common law copyright and other property rights in this document. This document shall not be reproduced, copied, changed or disclosed in any form or manner whatsoever without first obtaining the express written consent of TECHNE.

SHEET TITLE
SECOND FLOOR PLAN - PROPOSED

A104

SHEET – OF 100

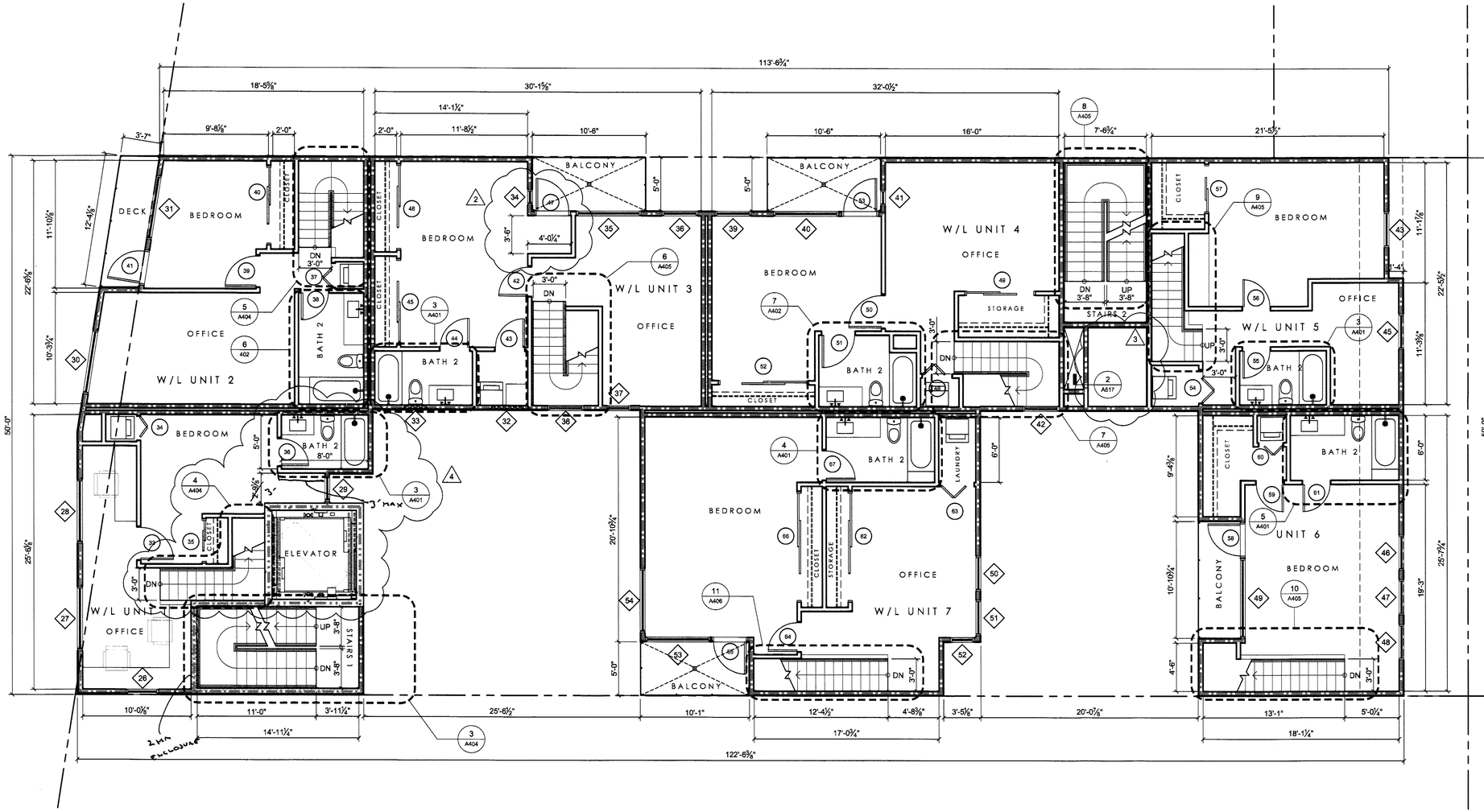

1 THIRD FLOOR PLAN - PROPOSED
SCALE: 3/16" = 1'-0"

0 2'-8" 5'-4" 10'-8"
SCALE: 3/16" = 1'-0"

N

APPROVED
CITY OF OAKLAND
BUILDING SERVICES
ELECT./MECH. PLANS
NOT CHECKED

FLOOR PLAN NOTES

A. The General Contractor or Sub-Contractor shall verify all conditions or dimensions on these plans in the field with actual site conditions.
B. Written dimensions shall take precedence over scaled dimensions and shall be verified on the job site. On-site verification of all dimensions and conditions shall be the sole responsibility of the General Contractor and Sub-Contractors.
C. The Contractor or sub-contractor shall notify TECHNE if any conflicts or discrepancy occurs between this information on this plan and actual field conditions.
D. Any discrepancies with this drawing affecting project layout shall be brought to the attention of TECHNE. Do not proceed with work until written or verbal instructions are issued by TECHNE.
E. INSULATION: R-15 Batt Insulation at all Exterior 2 X 4 Walls.
R-15 Batt Insulation at all accessible interior walls for sound control.
R-30 Batt Insulation at 2 X 10 Ceiling, Raised Floor & Roof Areas.
R-4.5 Insulation Wrap on all New Hot Water Piping.
R-4.5 Insulation Wrap on all New Supply Ducts.
F. SMOKE DETECTORS: Shall be installed in each bedroom, in access points to each sleeping area and in each story and basements. Detector shall have an alarm audible in all sleeping areas of the unit. Smoke alarms are required to be interconnected in such a manner that the activation of an alarm will activate all the alarms in the individual unit. Units shall be permanently wired to the building wiring and equipped with battery backup.
G. SHOWER COMPARTMENTS: Shower compartments and bathtubs with installed shower heads shall be finished with a nonabsorbent surface that extends to a height of not less than 6 feet above the floor. *CRC R307.2*

DIMENSIONS

- EXTERIOR WALL DIMENSIONS TO FACE OF FINISH (U.N.O.)
- INTERIOR WALL DIMENSIONS TO CENTER LINE OF STUD (U.N.O.)
- CLEARANCE DIMENSIONS ARE TO FACE OF FINISH MATERIALS, NOTED WITH CLR.

FLOOR PLAN LEGEND

1-HOUR FIRE RATED EXTERIOR WALL: 2x4 wood stud @ 16" O.C. with 1 layer of ⅝" Type X gypsum board inside, ⅜" sheathing + ⅞" stucco on outside. Per CBC 2013 Table 721.1(2) Item Number 15-1.3.

INTERIOR WALL: 2X4 wood stud @ 16" O.C. with 1 layer of ⅝" gypsum board on each side.

1 HOUR FIRE RATED INTERIOR WALL: 2X wood stud @ 16" O.C. with 1 layer of ⅝" type X gypsum board on each side.

2- HOUR FIRE-RATED EXTERIOR WALL: 2x6 wood stud @ 16" O.C. with 1 layer of ⅝" Type X gypsum board inside, ⅜" sheathing + ⅞" stucco on outside. Per CBC 2013 Table 721.1(2) Item Number 15-1.3.

2- HOUR FIRE-RATED INTERIOR WALL: 2x6 wood stud @ 16" O.C. with 2 layers of ⅝" Type X gypsum board on each side. Per CBC 2013 Table 721.1(2) Item Number 14-1.5.

2- HOUR FIRE-RATED INTERIOR WALL: 2x4 wood stud @ 16" O.C. with 2 layers of ⅝" Type X gypsum board on each side. Per CBC 2013 Table 721.1(2) Item Number 14-1.5.

1- HOUR FIRE-RATED EXTERIOR WALL: 2x6 wood stud @ 16" O.C. with ⅜" sheathing + ⅞" stucco on each side. Per CBC 2013 Table 721.1(2) Item Number 15-1.2.

2 HOUR FIRE RATED WALL: 8" Reinforced Concrete. Per CBC 2013 Table 721.1(2) Item Number 4-1.1

2 HOUR FIRE RATED WALL: 8" Concrete Masonry Unit, grouted solid. Per CBC 2013 Table 721.1(2) Item Number 3-1.1, 3-1.2, 3-1.3 and 3-1.4.

WALL OPENING: 80" high u.n.o. Finished with ⅝" gypsum board with square corners.

3⅝" U.N.O.
03
DOOR AND SYMBOL. See door schedule for complete information

1
WINDOW AND SYMBOL. See window schedule for complete information

FIELD COPY

TECHNE
DESIGN | DEVELOPMENT
3956 30th Street, San Diego, CA 92104
techne-us.com sustainablearchitect.org
o 619-940-5814 m 313-595-5814

CONSULTANTS

LICENSED ARCHITECT
MICHAEL RENE MORTON
C-19371
REN. 04/30/2015
STATE OF CALIFORNIA

414 29th Avenue
Oakland, CA 94601

OWNER

29th Avenue Group, LLC
1211 Embarcadero Way, Suite D
Oakland, CA 94606

BuildZig
Dream it. Build it. Zig it.

MARK	DATE	DESCRIPTION
01	11.10.14	1st Building Permit Submittal
02	02.23.15	2nd Building Permit Submittal
03	03.13.15	3rd Building Permit Submittal
04	04.02.15	Elevator Revision

3/26/2015 11:53:54 AM

PROJECT NO: 1410
CAD DWG FILE: A105 - THIRD FLOOR PLAN - PROPOSED - REVISED.DWG
DRAWN BY: A.S, M.M., J.C., J.S.
CHK'D BY: A.S., M.M

COPYRIGHT: TECHNE expressly reserves its common law copyright and other property rights in this document. This document shall not be reproduced, copied, changed or disclosed in any form or manner whatsoever without first obtaining the express written consent of TECHNE.

SHEET TITLE
THIRD FLOOR PLAN - PROPOSED

A105

SHEET -- OF 100

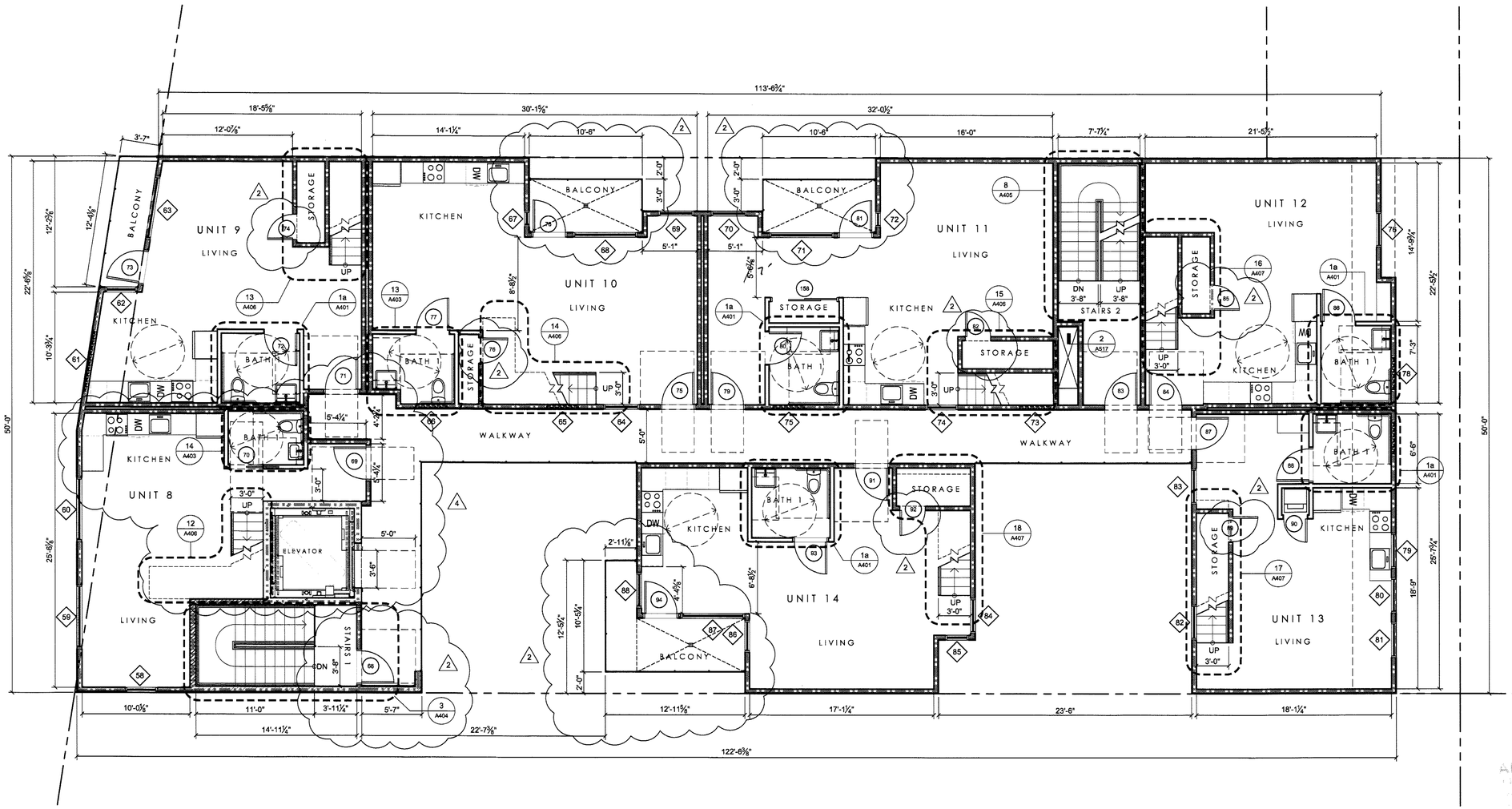

1 FOURTH FLOOR PLAN - PROPOSED
SCALE: 3/16" = 1'-0"

0 2'-8" 5'-4" 10'-8"
SCALE: 3/16" = 1'-0"

N

APPROVED
CITY OF OAKLAND
BUILDING SERVICES
ELECT. MECH. PLUMB.
NOT CHECKED

FLOOR PLAN NOTES

A. The General Contractor or Sub-Contractor shall verify all conditions or dimensions on these plans in the field with actual site conditions.
B. Written dimensions shall take precedence over scaled dimensions and shall be verified on the job site. On-site verification of all dimensions and conditions shall be the sole responsibility of the General Contractor and Sub-Contractors.
C. The Contractor or sub-contractor shall notify TECHNE if any conflicts or discrepancy occurs between this information on this plan and actual field conditions.
D. Any discrepancies with this drawing affecting project layout shall be brought to the attention of TECHNE. Do not proceed with work until written or verbal instructions are issued by TECHNE.
E. INSULATION: R-15 Batt Insulation at all Exterior 2 X 4 Walls.
R-15 Batt Insulation at all accessible interior walls for sound control.
R-30 Batt Insulation at 2 X 10 Ceiling, Raised Floor & Roof Areas.
R-4.5 Insulation Wrap on all New Hot Water Piping.
R-4.5 Insulation Wrap on all New Supply Ducts.
F. SMOKE DETECTORS: Shall be installed in each bedroom, in access points to each sleeping area and in each story and basements. Detector shall have an alarm audible in all sleeping areas of the unit. Smoke alarms are required to be interconnected in such a manner that the activation of an alarm will activate all the alarms in the individual unit. Units shall be permanently wired to the building wiring and equipped with battery backup.
G. SHOWER COMPARTMENTS: Shower compartments and bathtubs with installed shower heads shall be finished with a nonabsorbent surface that extends to a height of not less than 6 feet above the floor. *CRC R307.2*

DIMENSIONS

- EXTERIOR WALL DIMENSIONS TO FACE OF FINISH (U.N.O.)
- INTERIOR WALL DIMENSIONS TO CENTER LINE OF STUD (U.N.O.)
- CLEARANCE DIMENSIONS ARE TO FACE OF FINISH MATERIALS, NOTED WITH CLR.

FLOOR PLAN LEGEND

1-HOUR FIRE RATED EXTERIOR WALL: 2x4 wood stud @ 16" O.C. with 1 layer of ⅝" Type X gypsum board inside, ⅜" sheathing + ½" stucco on outside. Per CBC 2013 Table 721.1(2) Item Number 15-1.3.

INTERIOR WALL: 2X4 wood stud @ 16" O.C. with 1 layer of ⅝" gypsum board on each side.

1 HOUR FIRE RATED INTERIOR WALL: 2X wood stud @ 16" O.C. with 1 layer of ⅝" type X gypsum board on each side.

2- HOUR FIRE-RATED EXTERIOR WALL: 2x6 wood stud @ 16" O.C. with 1 layer of ⅝" Type X gypsum board inside, ⅜" sheathing + ½" stucco on outside. Per CBC 2013 Table 721.1(2) Item Number 15-1.3.

2- HOUR FIRE-RATED INTERIOR WALL: 2x6 wood stud @ 16" O.C. with 2 layers of ⅝" Type X gypsum board on each side. Per CBC 2013 Table 721.1(2) Item Number 14-1.5.

2- HOUR FIRE-RATED INTERIOR WALL: 2x4 wood stud @ 16" O.C. with 2 layers of ⅝" Type X gypsum board on each side. Per CBC 2013 Table 721.1(2) Item Number 14-1.5.

1- HOUR FIRE-RATED EXTERIOR WALL: 2x6 wood stud @ 16" O.C. with ⅜" sheathing + ½" stucco on each side. Per CBC 2013 Table 721.1(2) Item Number 15-1.2.

2 HOUR FIRE RATED WALL: 8" Reinforced Concrete. Per CBC 2013 Table 721.1(2) Item Number 4-1.1

2 HOUR FIRE RATED WALL: 8" Concrete Masonry Unit, grouted solid. Per CBC 2013 Table 721.1(2) Item Number 3-1.1, 3-1.2, 3-1.3 and 3-1.4.

WALL OPENING: 80" high u.n.o. Finished with ⅝" gypsum board with square corners.

3⅝" U.N.O.
03
DOOR AND SYMBOL. See door schedule for complete information

1
WINDOW AND SYMBOL. See window schedule for complete information

FIELD COPY

TECHNE
DESIGN | DEVELOPMENT
3956 30th Street, San Diego, CA 92104
techne-us.com sustainablearchitect.org
o 619-940-5814 m 313-595-5814

CONSULTANTS

LICENSED ARCHITECT
MICHAEL RENE MORTON
C-19371
REN. 04/30/2015
STATE OF CALIFORNIA

414 29th Avenue
Oakland, CA 94601

OWNER

29th Avenue Group, LLC
1211 Embarcadero Way, Suite D
Oakland, CA 94606

BuildZig
Dream it. Build it. Zig it.

MARK	DATE	DESCRIPTION
D1	11.10.14	1st Building Permit Submittal
D2	02.23.15	2nd Building Permit Submittal
D3	03.13.15	3rd Building Permit Submittal
D4	04.02.15	Elevator Revision
D5	04.09.15	Permit Set

4/1/2015 5:09:07 PM

PROJECT NO: 1410
CAD DWG FILE: A106 - FOURTH FLOOR PLAN - PROPOSED - REVISED.DWG
DRAWN BY: A.S, M.M., J.C., J.S.
CHK'D BY: A.S., M.M

COPYRIGHT: TECHNE expressly reserves its common law copyright and other property rights in this document. This document shall not be reproduced, copied, changed or disclosed in any form or manner whatsoever without first obtaining the express written consent of TECHNE

SHEET TITLE
FOURTH FLOOR PLAN - PROPOSED

A106
SHEET -- OF 100

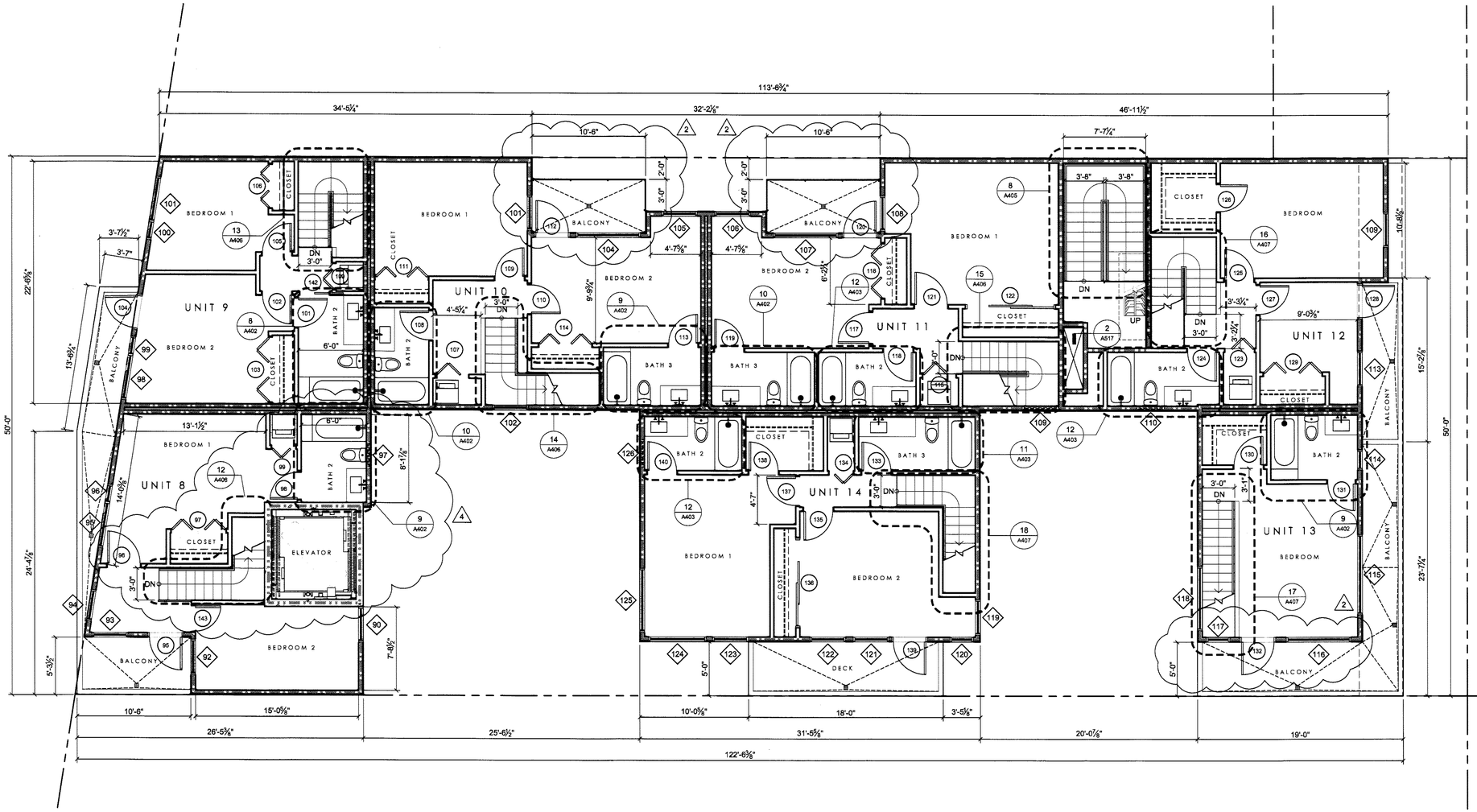

1 FIFTH FLOOR PLAN - PROPOSED
SCALE: 3/16" = 1'-0"

0 2'-8" 5'-4" 10'-8"
SCALE: 3/16" = 1'-0"

N

FLOOR PLAN NOTES

A. The General Contractor or Sub-Contractor shall verify all conditions or dimensions on these plans in the field with actual site conditions.
B. Written dimensions shall take precedence over scaled dimensions and shall be verified on the job site. On-site verification of all dimensions and conditions shall be the sole responsibility of the General Contractor and Sub-Contractors.
C. The Contractor or sub-contractor shall notify TECHNE if any conflicts or discrepancy occurs between this information on this plan and actual field conditions.
D. Any discrepancies with this drawing affecting project layout shall be brought to the attention of TECHNE. Do not proceed with work until written or verbal instructions are issued by TECHNE.
E. INSULATION: R-15 Batt Insulation at all Exterior 2 X 4 Walls.
R-15 Batt Insulation at all accessible interior walls for sound control.
R-30 Batt Insulation at 2 X 10 Ceiling, Raised Floor & Roof Areas.
R-4.5 Insulation Wrap on all New Hot Water Piping.
R-4.5 Insulation Wrap on all New Supply Ducts.
F. SMOKE DETECTORS: Shall be installed in each bedroom, in access points to each sleeping area and in each story and basements. Detector shall have an alarm audible in all sleeping areas of the unit. Smoke alarms are required to be interconnected in such a manner that the activation of an alarm will activate all the alarms in the individual unit. Units shall be permanently wired to the building wiring and equipped with battery backup.
G. SHOWER COMPARTMENTS: Shower compartments and bathtubs with installed shower heads shall be finished with a nonabsorbent surface that extends to a height of not less than 6 feet above the floor. *CRC R307.2*

DIMENSIONS

- EXTERIOR WALL DIMENSIONS TO FACE OF FINISH (U.N.O.)
- INTERIOR WALL DIMENSIONS TO CENTER LINE OF STUD (U.N.O.)
- CLEARANCE DIMENSIONS ARE TO FACE OF FINISH MATERIALS, NOTED WITH CLR.

FLOOR PLAN LEGEND

1-HOUR FIRE RATED EXTERIOR WALL: 2x4 wood stud @ 16" O.C. with 1 layer of ⅝" Type X gypsum board inside, ⅜" sheathing + ⅞" stucco on outside. Per CBC 2013 Table 721.1(2) Item Number 15-1.3.

INTERIOR WALL: 2X4 wood stud @ 16" O.C. with 1 layer of ⅝" gypsum board on each side.

1 HOUR FIRE RATED INTERIOR WALL: 2X wood stud @ 16" O.C. with 1 layer of ⅝" type X gypsum board on each side.

2- HOUR FIRE-RATED EXTERIOR WALL: 2x6 wood stud @ 16" O.C. with 1 layer of ⅝" Type X gypsum board inside, ⅜" sheathing + ⅞" stucco on outside. Per CBC 2013 Table 721.1(2) Item Number 15-1.3.

2- HOUR FIRE-RATED INTERIOR WALL: 2x6 wood stud @ 16" O.C. with 2 layers of ⅝" Type X gypsum board on each side. Per CBC 2013 Table 721.1(2) Item Number 14-1.5.

2- HOUR FIRE-RATED INTERIOR WALL: 2x4 wood stud @ 16" O.C. with 2 layers of ⅝" Type X gypsum board on each side. Per CBC 2013 Table 721.1(2) Item Number 14-1.5.

1- HOUR FIRE-RATED EXTERIOR WALL: 2x6 wood stud @ 16" O.C. with ⅜" sheathing + ⅞" stucco on each side. Per CBC 2013 Table 721.1(2) Item Number 15-1.2.

2 HOUR FIRE RATED WALL: 8" Reinforced Concrete. Per CBC 2013 Table 721.1(2) Item Number 4-1.1

2 HOUR FIRE RATED WALL: 8" Concrete Masonry Unit, grouted solid. Per CBC 2013 Table 721.1(2) Item Number 3-1.1, 3-1.2, 3-1.3 and 3-1.4.

WALL OPENING: 80" high u.n.o. Finished with ⅝" gypsum board with square corners.

3⅝" U.N.O. 03
DOOR AND SYMBOL. See door schedule for complete information

1
WINDOW AND SYMBOL. See window schedule for complete information

FIELD COPY

TECHNE
DESIGN | DEVELOPMENT
3956 30th Street, San Diego, CA 92104
techne-us.com sustainablearchitect.org
o 619-940-5814 m 313-595-5814

CONSULTANTS

LICENSED ARCHITECT
MICHAEL RENE MORTON
C-19371
REN. 04/30/2015
STATE OF CALIFORNIA

414 29th Avenue
Oakland, CA 94601

OWNER

29th Avenue Group, LLC
1211 Embarcadero Way, Suite D
Oakland, CA 94606

BuildZig
Dream it. Build it. Zig it.

MARK	DATE	DESCRIPTION
D1	11.10.14	1st Building Permit Submittal
D2	02.23.15	2nd Building Permit Submittal
D3	03.13.15	3rd Building Permit Submittal
D4	04.02.15	Elevator Revision

3/26/2015 12:01:50 PM

PROJECT NO: 1410
CAD DWG FILE: A107 - FIFTH FLOOR PLAN - PROPOSED - REVISED.DWG
DRAWN BY: A.S, M.M., J.C., J.S.
CHK'D BY: A.S., M.M

COPYRIGHT: TECHNE expressly reserves its common law copyright and other property rights in this document. This document shall not be reproduced, copied, changed or disclosed in any form or manner whatsoever without first obtaining the express written consent of TECHNE.

SHEET TITLE
FIFTH FLOOR PLAN - PROPOSED

A107
SHEET -- OF 100

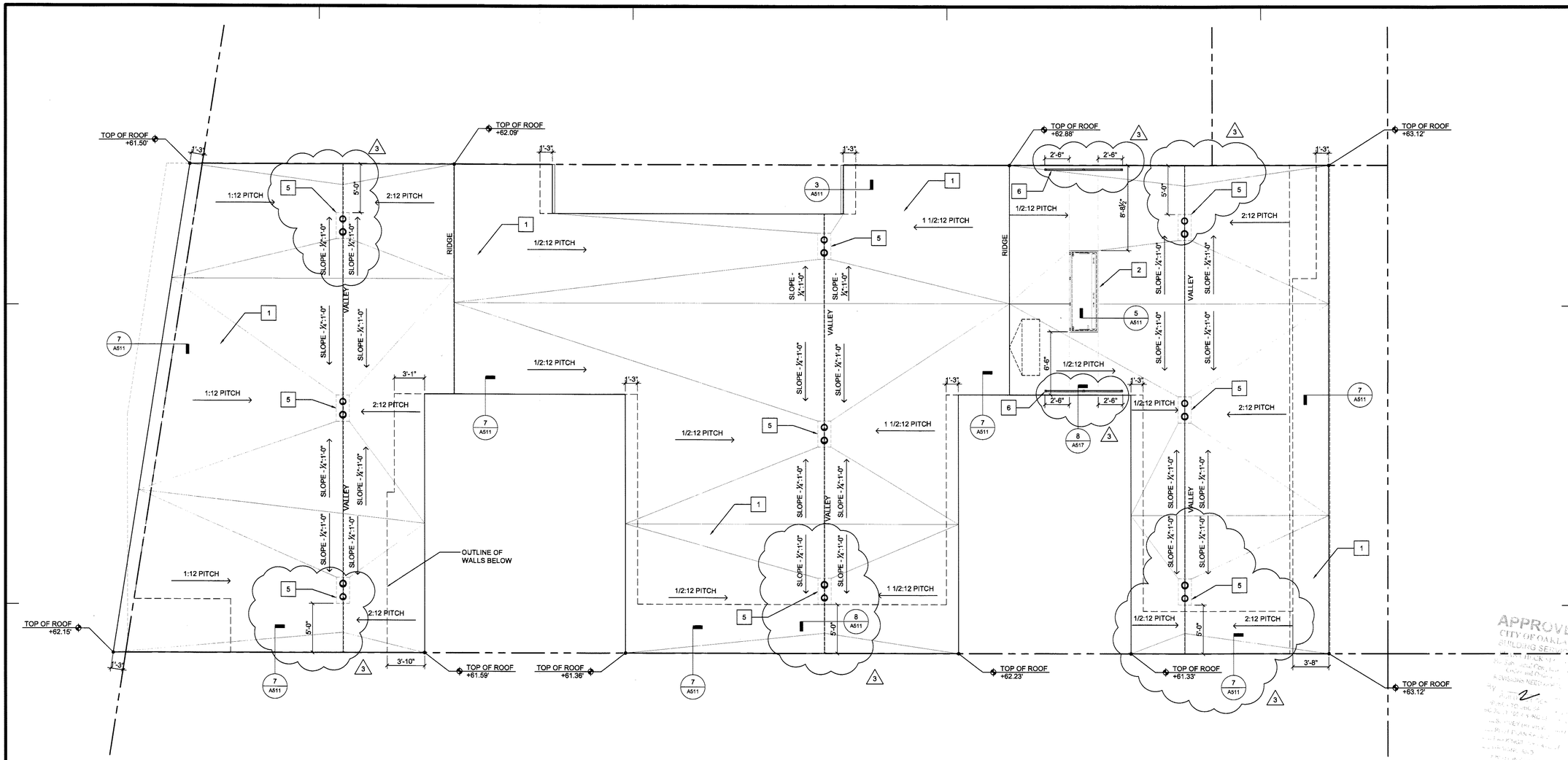

1 ROOF PLAN - PROPOSED
SCALE: 3/16" = 1'-0"

0 2'-8" 5'-4" 10'-8"
SCALE: 3/16" = 1'-0"

N

ROOF PLAN LEGEND

SLOPE - ¼":1'-0"	ROOF SLOPE/PITCH INDICATOR
	OUTLINE OF WALLS BELOW
o	PLUMBING VENT OF MISC. VENT
	GUTTER AND DOWNSPOUT 3" x 2½" square gutter. Gutter color to match roof flashing. Downspout color to match wall finish.
	ROOF DRAIN THUNDERBIRD TPO-CLAD Bottom Outlet Roof Drain with Overflow. Part # TPO-RDCB3NH - 3" no-hub

ROOF PLAN KEYNOTES

1. TPO ROOF ASSEMBLY ASSEMBLY - CARLISLE SURE-WELD TPO 60mil thick. Class A assembly. ICC-ESR REPORT: ESR-1463. Warranty shall be Golden Seal Total Roofing System Warranty for a 20 year roof. It's the responsibility of the Roofing Contractor to ensure that all work is done according to the requirements in order to obtain specified warranty. The roofing contractor shall schedule inspections and perform all other necessary steps in order for the warranty to be granted by the manufacturer.
2. ROOF HATCH - Bilco type L roof scuttle. 2'-6" x 8'-0".
3. PIPE PENETRATION - CARLISLE SURE-WELD TPO Pre-formed.
4. VENT PENETRATION - CARLISLE SURE-WELD TPO Pre-formed.
5. ROOF DRAIN - Thunderbird TPO-RDCB2NH TPO-Clad bottom outlet roof drain with overflow. Size per Plumbing Engineering drawings.
6. 42" metal guardrail. Guardrail shall be construction as to prevent the passage of a 21" sphere.

ROOF PLAN NOTES

A. ROOF ASSEMBLY SHALL BE 1-HOUR FIRE RATED PER ICC-ES ESR-1153, FIGURE 4H - ASSEMBLY H2
A.A. 49/64 tongue-and-groove, span rated sheathing (Exposure 1); glued with a subfloor adhesive and nailed.
A.B. TJI 210, 230, 360, or 560 joist with Flak Jacket protection and joist on-center spacing of 16" or less. For wider spacing (up to 24" on-center) use a minimum of 11⅞" deep TJI 230. 360, or 560 joist.
A.C. One layer of ⅝" Pabco Flame Curb Type C gypsum board installed over RC-1 type resilient channel at 16" on-center.

FIELD COPY

TECHNE
DESIGN | DEVELOPMENT
3956 30th Street, San Diego, CA 92104
techne-us.com sustainablearchitect.org
o 619-940-5814 m 313-595-5814

CONSULTANTS

LICENSED ARCHITECT
MICHAEL RENE MORTON
C-19371
REN. 04/30/2015
STATE OF CALIFORNIA

414 29th Avenue
Oakland, CA 94601

OWNER

29th Avenue Group, LLC
1211 Embarcadero Way, Suite D
Oakland, CA 94606

BuildZig
Dream it. Build it. Zig it.

APPROVED
CITY OF OAKLAND
BUILDING SERVICES

ELECT, MECH, PLUMB NOT CHECKED

MARK	DATE	DESCRIPTION
01	11.10.14	1st Building Permit Submittal
02	02.23.15	2nd Building Permit Submittal
03	03.13.15	3rd Building Permit Submittal

3/14/2015 11:26:42 AM

PROJECT NO: 1410
CAD DWG FILE: A108 - ROOF PLAN - PROPOSED.DWG
DRAWN BY: A.S, M.M., J.C., J.S.
CHK'D BY: A.S., M.M

COPYRIGHT: TECHNE expressly reserves its common law copyright and other property rights in this document. This document shall not be reproduced, copied, changed or disclosed in any form or manner whatsoever without first obtaining the express written consent of TECHNE

SHEET TITLE
ROOF PLAN - PROPOSED

A108

SHEET -- OF 100

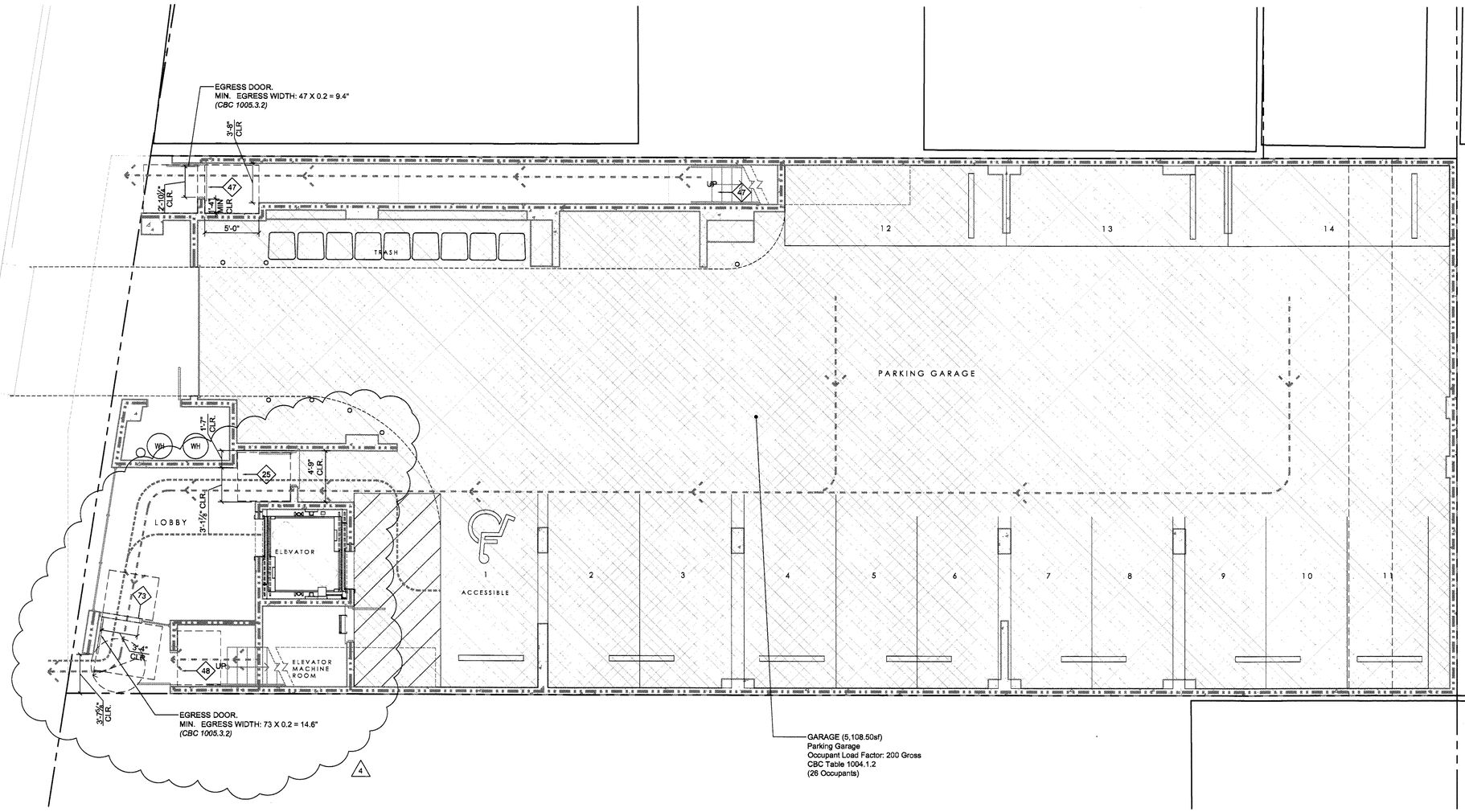

1 FIRST FLOOR EGRESS PLAN
SCALE: 3/16" = 1'-0"

0 2'-8" 5'-4" 10'-8"
SCALE: 3/16" = 1'-0"

N

EGRESS PLAN LEGEND

FUNCTION OF SPACE: Parking Garage

FUNCTION OF SPACE: Business Areas

FUNCTION OF SPACE: Residential

ACCESSIBILITY CLEARANCES (See Accessibility Notes, General Conditions and Detail sheet A502) All clearances shall comply with CBC 2013 Chapter 11A and 11B.

ACCESSIBILITY NOTES

1. All entrances and all exterior ground-floor exit doors to buildings and facilities shall be made accessible to persons with disabilities. (Sec. 1133B.1.1.1.1)
2. Latching and locking hand activated doors in a path of travel shall be operable with a single effort by lever type hardware, panic bars, push pull activating bars, or other hardware designed to provide passage without requiring the ability to grasp the opening hardware. Locked exit doors shall operate as above in egress direction. (Sec. 1133B.2.5.2)
3. Hand activated door opening hardware shall be centered between 30 inches (762 mm) and 44 nches (1118 mm) above the floor. (Sec. 1133B.2.5.2)
4. The width and height of doorways shall comply with section 1008. Every required exit doorway shall permit the installation of a door not less than 3 feet \(914 mm\) wide and not less than 6 feet 8 inches (2032 mm) high. Exit doors shall be capable of opening at least 90 degrees and provide not less than 32 inches clear width (813mm). (Sec. 1133B.2.2 and Figure 11B 33\)
5. For hinged doors, the opening width shall be measured with the door positioned at an angle of 90 degrees from its closed position. (Sec. 1133.2.3 and Fig. 11B 33)
6. Minimum maneuvering clearances at doors shall be as shown in Figures 11B-26A and 11B-26B. The floor or ground area within the required clearances shall be level and clear. (Sec.1133B.2.4.2)
7. There shall be a level and clear floor or landing on each side of a door. The level area shall have a length in the direction of door swing of at least 60 inches \(1524 mm\) and the length opposite the direction of door swing of 48 inches (1219 mm) as measured at right angle to the plane of the door in its closed position. (Sec. 1133B.2.4.2 and Fig. 11B 26A and 11B 26B)
8. The width of the level area on the side to which the door swings shall extend 24 inches (610 mm) minimum past the strike edge of the door for exterior doors and 18 inches (457 mm) minimum past the strike edge for interior doors. This also applies to obstructions and recesses. An additional 12 inches is required at the push side if a frontal approach, if door is equipped with both latch and closer. (Sections 1133B.2.4.3, 1133B.2.4.5, 1133B.2.5.3, Figures 11B 26A and B, and 11B-33(a)
9. The floor or landing shall be not more than 1/2 inch (12.7 mm) lower than the threshold of the doorway. Change in level between 1/4 inch (6 mm) and 275 inch (12.7 mm) shall be beveled with a slope no greater than one unit vertical to 2 unit horizontal (50- percent slope) (Sec. 1133B.2.4.1 and Figures 11B 32)
10. The bottom 10 inches (254 mm) of all doors except automatic and sliding shall have a smooth, uninterrupted surface to allow the door to be opened by a wheelchair footrest without creating a trap or hazardous condition. Where narrow frame doors are used, a 10 inch (254 mm) high smooth panel shall be installed on the push side. (Sec 1133.2.6 and Fig 11B 29)
11. Maximum effort to operate doors shall not exceed 5 pounds (22 N) for exterior and interior doors, applied at right angles to hinged doors and at the center plane of sliding or folding doors. Compensating devices or automatic door operators may be utilized. The maximum effort to operate fire doors may be increased up to 15 pounds (66.72N) if allowed by the appropriate administrative authority. (Sec 1133B.2.5)
12. Specific work stations need only comply with the required aisle width (Sections 1133B.6.1 and 1133B.6.2 and floors and levels (Section 1120B). (Sec. 1123B.2)
13. Entry ways to specific work stations shall be 32 inches clear width. (Sec. 1123B.2)
14. PROVIDE PANIC HARDWARE AT ALL EXIT DOORS.
15. Gates used as a component in a means of egress shall conform to the applicable requirements for doors. (Sec 1008.2)
16. Exterior Exit doors shall have a sign posted above stating: DOOR TO REMAIN UNLOCKED DURING REGULAR BUSINESS HOURS.

EGRESS NOTES

FIELD COPY

ACCESSIBLE ROUTE - Accessible routes shall comply with CBC 2013 Section 11B-402. Walking surfaces shall provide clearances complying with CBC 2013 Section 11 B-403.5. The running slope of walking surfaces shall not be steeper than 1:20. The cross slope of walking surfaces shall not be steeper than 1:48. Except as provided in CBC 2013 Sections 11B-403.5.2 and 11B-403.5.3, the clear width of walking surfaces shall be 36 inches (914 mm) minimum. The clear width for walking surfaces in corridors serving an occupant load of 10 or more shall be 44 inches (1118 mm) minimum. The clear width for sidewalks and walks shall be 48 inches (1219 mm) minimum.

MEANS OF EGRESS - A continuous and unobstructed path of vertical and horizontal egress travel from any occupied portion of a building or structure to a public way. A means of egress consists of three separate and distinct parts: the exit access, the exit and the exit discharge. Means of Egress shall comply with CBC 2013 Chapter 10.

DESIGN OCCUPANT LOAD - The number of occupants whom means egress facilities shall be provided. Where occupants from accessory area egress through a primary space, the calculated occupant load for the primary space shall include the total occupant load of the primary space plus the number of occupants egressing through it from the accessory area.

MINIMUM EGRESS WIDTH - The total width of means of egress in inches (mm) shall not be less than the total occupant load served by the means of egress multiplied by 0.3 inches (7.62 mm) per occupant for stairways and by 0.2 inches (5.08 mm) per occupant for other egress components. Multiple means of egress shall be sized such that the loss of any one means of egress shall not reduce the available capacity to less than 50 percent of the required capacity. The maximum capacity required from any story of a building shall be maintained to the termination of the means of egress. (CBC 1005.1)

DOOR ENCROACHMENT - Doors, when fully opened, and handrails shall not reduce the required means of egress width by more than 7 inches (178 mm). Doors in any position shall not reduce the required width by more than one-half. Other nonstructural projections such as trim and similar decorative features shall be permitted to project into the required width a maximum of 11/2 inches (38 mm) on each side. (CBC 1005.2)

EGRESS ILLUMINATION - The means of egress, including the exit discharge, shall be illuminated at all times the building space served by the means of egress is occupied. Egress illumination shall comply with CBC 2013 Section 1006.

ILLUMINATION EMERGENCY POWER - The power supply for means of egress illumination shall normally be provided by the premises' electrical supply.

In the event of power supply failure, an emergency electrical system shall automatically illuminate all of the following areas:

1. Aisles and unenclosed egress stairways in rooms and spaces that require two or more means of egress.
2. Corridors, exit enclosures and exit passageways in buildings required to have two or more exits.
3. Exterior egress components at other than their levels of exit discharge until exit discharge is accomplished for buildings required to have two or more exits.
4. Interior exit discharge elements, as permitted in Section 1027.1, in buildings required to have two or more exits.
5. Exterior landings as required by Section 1008.1.6 for exit discharge doorways in buildings required to have two or more exits.

The emergency power system shall provide power for a duration of not less than 90 minutes and shall consist of storage batteries, unit equipment or an on-site generator. The installation of the emergency power system shall be in accordance with CBC 2013 Section 2702.

Illumination level under emergency power. Emergency lighting facilities shall be arranged to provide initial illumination that is at least an average of I footcandle (11 lux) and a minimum at any point of 0.1 footcandle (1 lux) measured along the path of egress at floor level. Illumination levels shall be permitted to decline to 0.6 footcandle (6 lux) average and a minimum at any point of 0.06 footcandle (0.6 lux) at the end of the emergency lighting time duration. A maximum-to-minimum illumination uniformity ratio of 40 to 1 shall not be exceeded.

TECHNE
DESIGN | DEVELOPMENT
3956 30th Street, San Diego, CA 92104
techne-us.com sustainablearchitect.org
o 619-940-5814 m 313-595-5814

CONSULTANTS

LICENSED ARCHITECT
MICHAEL RENE MORTON
C-19371
REN. 04/30/2015
STATE OF CALIFORNIA

414 29th Avenue
Oakland, CA 94601

OWNER

29th Avenue Group, LLC
1211 Embarcadero Way, Suite D
Oakland, CA 94606

BuildZig
Dream it. Build it. Zig it.

MARK	DATE	DESCRIPTION
01	11.10.14	1st Building Permit Submittal
02	02.23.15	2nd Building Permit Submittal
03	03.13.15	3rd Building Permit Submittal
04	04.02.15	Elevator Revision

4/1/2015 1:31:19 PM

PROJECT NO: 1410
CAD DWG FILE: A111 - FIRST FLOOR EGRESS PLAN - REVISED.DWG
DRAWN BY: A.S, M.M., J.C., J.S.
CHK'D BY: A.S., M.M

COPYRIGHT: TECHNE expressly reserves its common law copyright and other property rights in this document. This document shall not be reproduced, copied, changed or disclosed in any form or manner whatsoever without first obtaining the express written consent of TECHNE.

SHEET TITLE
FIRST FLOOR EGRESS PLAN

A111

SHEET -- OF 100

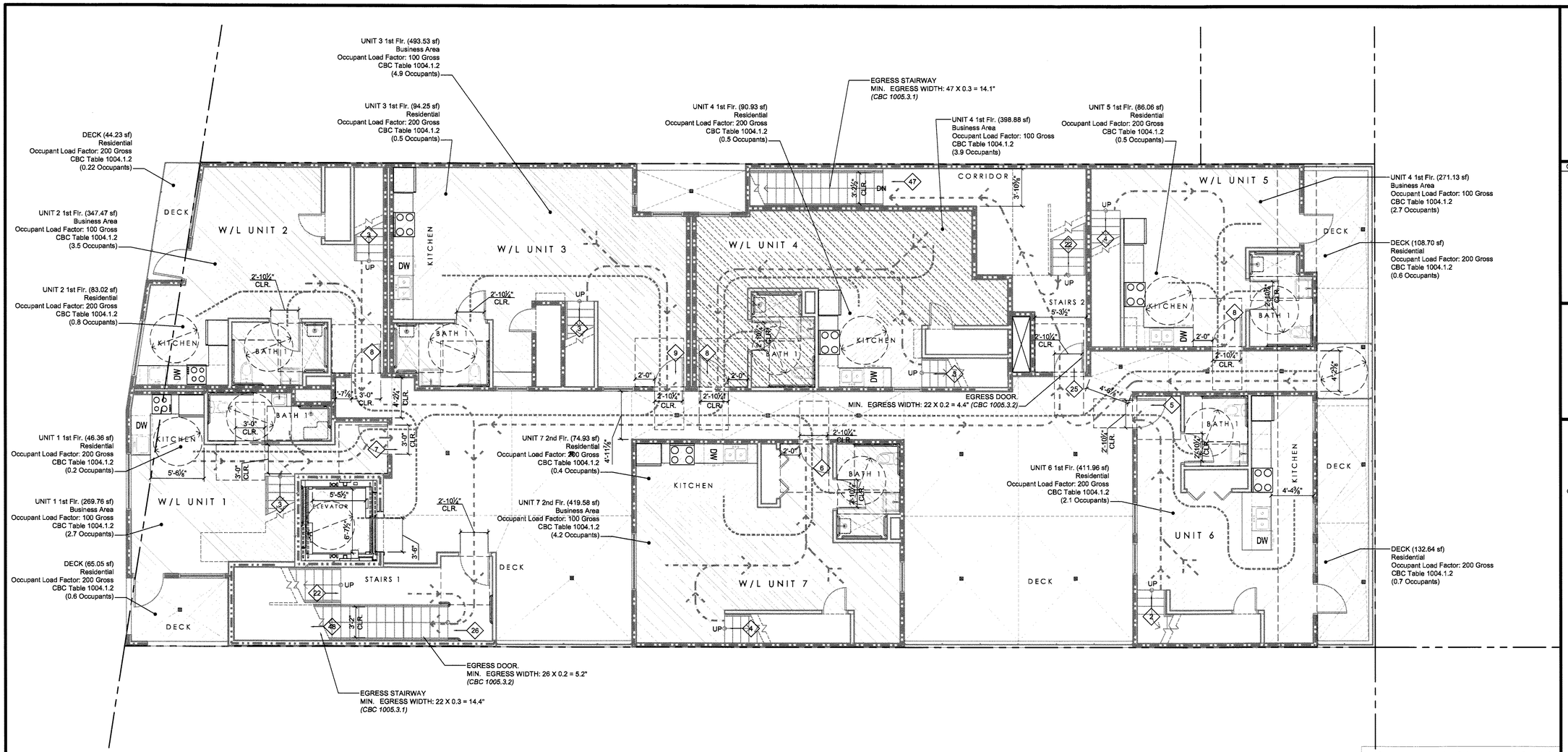

1 SECOND FLOOR EGRESS PLAN
SCALE: 3/16" = 1'-0"

0 2'-8" 5'-4" 10'-8"
SCALE: 3/16" = 1'-0"

N

LOAD CALCULATIONS

SPACES	OCCUPANT LOAD
UNIT 1	7
UNIT 2	8
UNIT 3	9
UNIT 4	8
UNIT 5	8
UNIT 6	5
UNIT 7	6
TOTAL	51

EGRESS PLAN LEGEND

FUNCTION OF SPACE: Parking Garage

FUNCTION OF SPACE: Business Areas

FUNCTION OF SPACE: Residential

ACCESSIBILITY CLEARANCES (See Accessibility Notes, General Conditions and Detail sheet A502) All clearances shall comply with CBC 2013 Chapter 11A and 11B.

ACCESSIBILITY NOTES

1. All entrances and all exterior ground-floor exit doors to buildings and facilities shall be made accessible to persons with disabilities. (Sec. 1133B.1.1.1.1)
2. Latching and locking hand activated doors in a path of travel shall be operable with a single effort by lever type hardware, panic bars, push pull activating bars, or other hardware designed to provide passage without requiring the ability to grasp the opening hardware. Locked exit doors shall operate as above in egress direction. (Sec. 1133B.2.5.2)
3. Hand activated door opening hardware shall be centered between 30 inches (762 mm) and 44 nches (1118 mm) above the floor. (Sec. 1133B.2.5.2)
4. The width and height of doorways shall comply with section 1008. Every required exit doorway shall permit the installation of a door not less than 3 feet \(914 mm\) wide and not less than 6 feet 8 inches (2032 mm) high. Exit doors shall be capable of opening at least 90 degrees and provide not less than 32 inches clear width (813mm). (Sec. 1133B.2.2 and Figure 11B 33\)
5. For hinged doors, the opening width shall be measured with the door positioned at an angle of 90 degrees from its closed position. (Sec. 1133.2.3 and Fig. 11B 33)
6. Minimum maneuvering clearances at doors shall be as shown in Figures 11B-26A and 11B-26B. The floor or ground area within the required clearances shall be level and clear. (Sec.1133B.2.4.2)
7. There shall be a level and clear floor or landing on each side of a door. The level area shall have a length in the direction of door swing of at least 60 inches \(1524 mm\) and the length opposite the direction of door swing of 48 inches (1219 mm) as measured at right angle to the plane of the door in its closed position. (Sec. 1133B.2.4.2 and Fig. 11B 26A and 11B 26B)
8. The width of the level area on the side to which the door swings shall extend 24 inches (610 mm) minimum past the strike edge of the door for exterior doors and 18 inches (457 mm) minimum past the strike edge for interior doors. This also applies to obstructions and recesses. An additional 12 inches is required at the push side if a frontal approach, if door is equipped with both latch and closer. (Sections 1133B.2.4.3, 1133B.2.4.5, 1133B.2.5.3, Figures 11B 26A and B, and 11B-33(a)
9. The floor or landing shall be not more than 1/2 inch (12.7 mm) lower than the threshold of the doorway. Change in level between 1/4 inch (6 mm) and 275 inch (12.7 mm) shall be beveled with a slope no greater than one unit vertical to 2 unit horizontal (50- percent slope) (Sec. 1133B.2.4.1 and Figures 11B 32)
10. The bottom 10 inches (254 mm) of all doors except automatic and sliding shall have a smooth, uninterrupted surface to allow the door to be opened by a wheelchair footrest without creating a trap or hazardous condition. Where narrow frame doors are used, a 10 inch (254 mm) high smooth panel shall be installed on the push side. (Sec 1133.2.6 and Fig 11B 29)
11. Maximum effort to operate doors shall not exceed 5 pounds (22 N) for exterior and interior doors, applied at right angles to hinged doors and at the center plane of sliding or folding doors. Compensating devices or automatic door operators may be utilized. The maximum effort to operate fire doors may be increased up to 15 pounds (66.72N) if allowed by the appropriate administrative authority. (Sec 1133B.2.5)
12. Specific work stations need only comply with the required aisle width (Sections 1133B.6.1 and 1133B.6.2 and floors and levels (Section 1120B). (Sec. 1123B.2)
13. Entry ways to specific work stations shall be 32 inches clear width. (Sec. 1123B.2)
14. PROVIDE PANIC HARDWARE AT ALL EXIT DOORS.
15. Gates used as a component in a means of egress shall conform to the applicable requirements for doors. (Sec 1008.2)
16. Exterior Exit doors shall have a sign posted above stating: DOOR TO REMAIN UNLOCKED DURING REGULAR BUSINESS HOURS.

EGRESS NOTES

ACCESSIBLE ROUTE - Accessible routes shall comply with CBC 2013 Section 11B-402. Walking surfaces shall provide clearances complying with CBC 2013 Section 11 B-403.5. The running slope of walking surfaces shall not be steeper than 1:20. The cross slope of walking surfaces shall not be steeper than 1:48. Except as provided in CBC 2013 Sections 11B-403.5.2 and 11B-403.5.3, the clear width of walking surfaces shall be 36 inches (914 mm) minimum. The clear width for walking surfaces in corridors serving an occupant load of 10 or more shall be 44 inches (1118 mm) minimum. The clear width for sidewalks and walks shall be 48 inches (1219 mm) minimum.

MEANS OF EGRESS - A continuous and unobstructed path of vertical and horizontal egress travel from any occupied portion of a building or structure to a public way. A means of egress consists of three separate and distinct parts: the exit access, the exit and the exit discharge. Means of Egress shall comply with CBC 2013 Chapter 10.

00 DESIGN OCCUPANT LOAD - The number of occupants whom means egress facilities shall be provided. Where occupants from accessory area egress through a primary space, the calculated occupant load for the primary space shall include the total occupant load of the primary space plus the number of occupants egressing through it from the accessory area.

MINIMUM EGRESS WIDTH - The total width of means of egress in inches (mm) shall not be less than the total occupant load served by the means of egress multiplied by 0.3 inches (7.62 mm) per occupant for stairways and by 0.2 inches (5.08 mm) per occupant for other egress components. Multiple means of egress shall be sized such that the loss of any one means of egress shall not reduce the available capacity to less than 50 percent of the required capacity. The maximum capacity required from any story of a building shall be maintained to the termination of the means of egress. (CBC 1005.1)

DOOR ENCROACHMENT - Doors, when fully opened, and handrails shall not reduce the required means of egress width by more than 7 inches (178 mm). Doors in any position shall not reduce the required width by more than one-half. Other nonstructural projections such as trim and similar decorative features shall be permitted to project into the required width a maximum of 11/2 inches (38 mm) on each side. (CBC 1005.2)

EGRESS ILLUMINATION - The means of egress, including the exit discharge, shall be illuminated at all times the building space served by the means of egress is occupied. Egress illumination shall comply with CBC 2013 Section 1006.

ILLUMINATION EMERGENCY POWER - The power supply for means of egress illumination shall normally be provided by the premises' electrical supply.

In the event of power supply failure, an emergency electrical system shall automatically illuminate all of the following areas:

1. Aisles and unenclosed egress stairways in rooms and spaces that require two or more means of egress.
2. Corridors, exit enclosures and exit passageways in buildings required to have two or more exits.
3. Exterior egress components at other than their levels of exit discharge until exit discharge is accomplished for buildings required to have two or more exits.
4. Interior exit discharge elements, as permitted in Section 1027.1, in buildings required to have two or more exits.
5. Exterior landings as required by Section 1008.1.6 for exit discharge doorways in buildings required to have two or more exits.

The emergency power system shall provide power for a duration of not less than 90 minutes and shall consist of storage batteries, unit equipment or an on-site generator. The installation of the emergency power system shall be in accordance with CBC 2013 Section 2702.

Illumination level under emergency power. Emergency lighting facilities shall be arranged to provide initial illumination that is at least an average of I footcandle (11 lux) and a minimum at any point of 0.1 footcandle (1 lux) measured along the path of egress at floor level. Illumination levels shall be permitted to decline to 0.6 footcandle (6 lux) average and a minimum at any point of 0.06 footcandle (0.6 lux) at the end of the emergency lighting time duration. A maximum-to-minimum illumination uniformity ratio of 40 to 1 shall not be exceeded.

TECHNE
DESIGN | DEVELOPMENT
3956 30th Street, San Diego, CA 92104
techne-us.com sustainablearchitect.org
o 619-940-5814 m 313-595-5814

CONSULTANTS

LICENSED ARCHITECT
MICHAEL RENE MORTON
C-19371
REN. 04/30/2015
STATE OF CALIFORNIA

414 29th Avenue
Oakland, CA 94601

OWNER

29th Avenue Group, LLC
1211 Embarcadero Way, Suite D
Oakland, CA 94606

BuildZig
Dream it. Build it. Zig it.

FIELD COPY

MARK	DATE	DESCRIPTION
01	11.10.14	1st Building Permit Submittal
02	02.23.15	2nd Building Permit Submittal
03	03.13.15	3rd Building Permit Submittal
04	04.02.15	Elevator Revision

4/1/2015 1:33:43 PM

PROJECT NO: 1410
CAD DWG FILE: A112 - SECOND FLOOR EGRESS PLAN - REVISED.DWG
DRAWN BY: A.S, M.M., J.C., J.S.
CHK'D BY: A.S., M.M

COPYRIGHT: TECHNE expressly reserves its common law copyright and other property rights in this document. This document shall not be reproduced, copied, changed or disclosed in any form or manner whatsoever without first obtaining the express written consent of TECHNE.

SHEET TITLE
SECOND FLOOR EGRESS PLAN

A112
SHEET -- OF 100

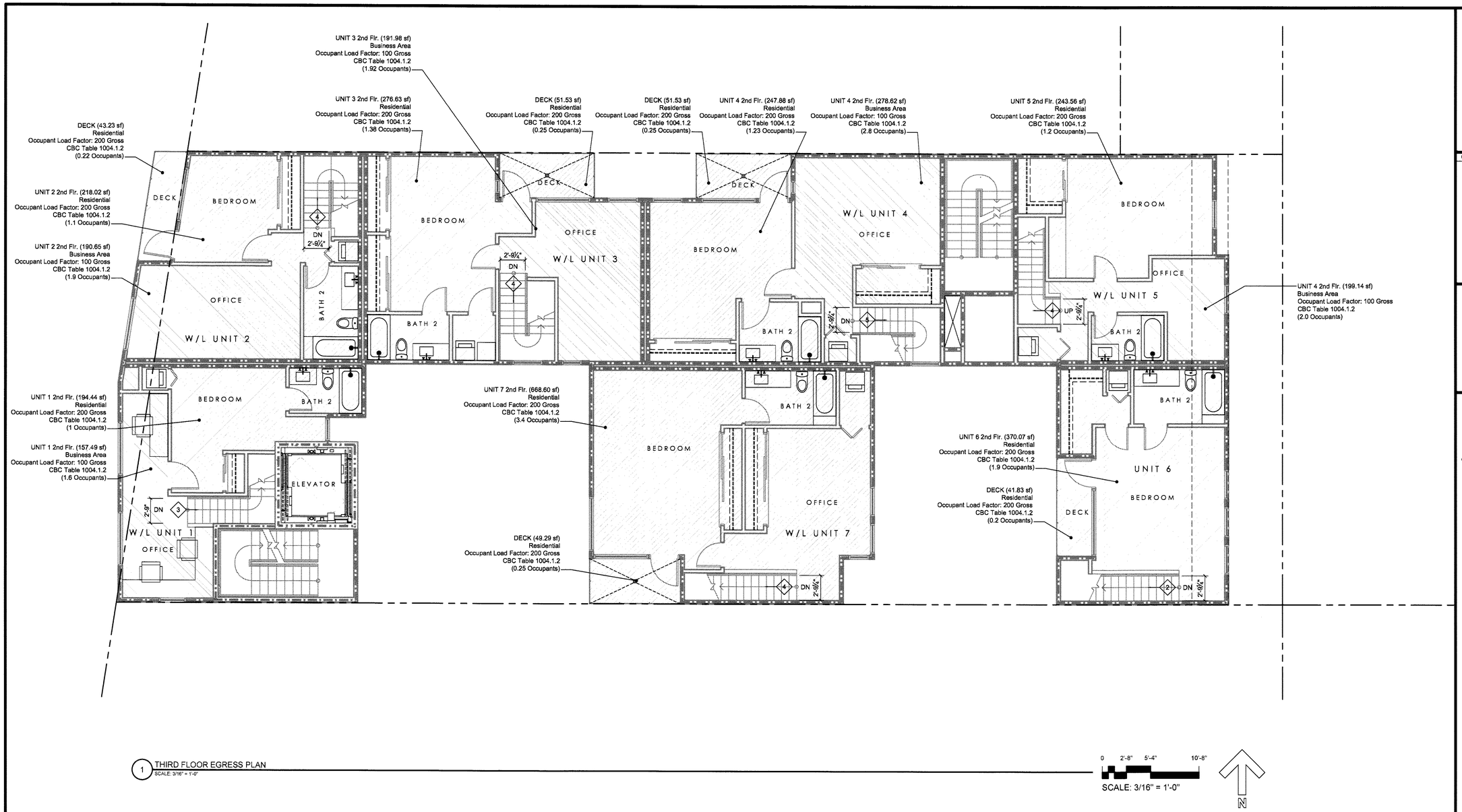

1 THIRD FLOOR EGRESS PLAN
SCALE: 3/16" = 1'-0"

0 2'-8" 5'-4" 10'-8"
SCALE: 3/16" = 1'-0"

N

EGRESS PLAN LEGEND

FUNCTION OF SPACE: Parking Garage

FUNCTION OF SPACE: Business Areas

FUNCTION OF SPACE: Residential

ACCESSIBILITY CLEARANCES (See Accessibility Notes, General Conditions and Detail sheet A502) All clearances shall comply with CBC 2013 Chapter 11A and 11B.

ACCESSIBILITY NOTES

1. All entrances and all exterior ground-floor exit doors to buildings and facilities shall be made accessible to persons with disabilities. (Sec. 1133B.1.1.1.1)
2. Latching and locking hand activated doors in a path of travel shall be operable with a single effort by lever type hardware, panic bars, push pull activating bars, or other hardware designed to provide passage without requiring the ability to grasp the opening hardware. Locked exit doors shall operate as above in egress direction. (Sec. 1133B.2.5.2)
3. Hand activated door opening hardware shall be centered between 30 inches (762 mm) and 44 nches (1118 mm) above the floor. (Sec. 1133B.2.5.2)
4. The width and height of doorways shall comply with section 1008. Every required exit doorway shall permit the installation of a door not less than 3 feet \(914 mm\) wide and not less than 6 feet 8 inches (2032 mm) high. Exit doors shall be capable of opening at least 90 degrees and provide not less than 32 inches clear width (813mm). (Sec. 1133B.2.2 and Figure 11B 33\)
5. For hinged doors, the opening width shall be measured with the door positioned at an angle of 90 degrees from its closed position. (Sec. 1133.2.3 and Fig. 11B 33)
6. Minimum maneuvering clearances at doors shall be as shown in Figures 11B-26A and 11B-26B. The floor or ground area within the required clearances shall be level and clear. (Sec.1133B.2.4.2)
7. There shall be a level and clear floor or landing on each side of a door. The level area shall have a length in the direction of door swing of at least 60 inches \(1524 mm\) and the length opposite the direction of door swing of 48 inches (1219 mm) as measured at right angle to the plane of the door in its closed position. (Sec. 1133B.2.4.2 and Fig. 11B 26A and 11B 26B)
8. The width of the level area on the side to which the door swings shall extend 24 inches (610 mm) minimum past the strike edge of the door for exterior doors and 18 inches (457 mm) minimum past the strike edge for interior doors. This also applies to obstructions and recesses. An additional 12 inches is required at the push side if a frontal approach, if door is equipped with both latch and closer. (Sections 1133B.2.4.3, 1133B.2.4.5, 1133B.2.5.3, Figures 11B 26A and B, and 11B-33(a)
9. The floor or landing shall be not more than 1/2 inch (12.7 mm) lower than the threshold of the doorway. Change in level between 1/4 inch (6 mm) and 275 inch (12.7 mm) shall be beveled with a slope no greater than one unit vertical to 2 unit horizontal (50- percent slope) (Sec. 1133B.2.4.1 and Figures 11B 32)
10. The bottom 10 inches (254 mm) of all doors except automatic and sliding shall have a smooth, uninterrupted surface to allow the door to be opened by a wheelchair footrest without creating a trap or hazardous condition. Where narrow frame doors are used, a 10 inch (254 mm) high smooth panel shall be installed on the push side. (Sec 1133.2.6 and Fig 11B 29)
11. Maximum effort to operate doors shall not exceed 5 pounds (22 N) for exterior and interior doors, applied at right angles to hinged doors and at the center plane of sliding or folding doors. Compensating devices or automatic door operators may be utilized. The maximum effort to operate fire doors may be increased up to 15 pounds (66.72N) if allowed by the appropriate administrative authority. (Sec 1133B.2.5)
12. Specific work stations need only comply with the required aisle width (Sections 1133B.6.1 and 1133B.6.2 and floors and levels (Section 1120B). (Sec. 1123B.2)
13. Entry ways to specific work stations shall be 32 inches clear width. (Sec. 1123B.2)
14. PROVIDE PANIC HARDWARE AT ALL EXIT DOORS.
15. Gates used as a component in a means of egress shall conform to the applicable requirements for doors. (Sec 1008.2)
16. Exterior Exit doors shall have a sign posted above stating: DOOR TO REMAIN UNLOCKED DURING REGULAR BUSINESS HOURS.

EGRESS NOTES

FIELD COPY

ACCESSIBLE ROUTE - Accessible routes shall comply with CBC 2013 Section 11B-402. Walking surfaces shall provide clearances complying with CBC 2013 Section 11 B-403.5. The running slope of walking surfaces shall not be steeper than 1:20. The cross slope of walking surfaces shall not be steeper than 1:48. Except as provided in CBC 2013 Sections 11B-403.5.2 and 11B-403.5.3, the clear width of walking surfaces shall be 36 inches (914 mm) minimum. The clear width for walking surfaces in corridors serving an occupant load of 10 or more shall be 44 inches (1118 mm) minimum. The clear width for sidewalks and walks shall be 48 inches (1219 mm) minimum.

MEANS OF EGRESS - A continuous and unobstructed path of vertical and horizontal egress travel from any occupied portion of a building or structure to a public way. A means of egress consists of three separate and distinct parts: the exit access, the exit and the exit discharge. Means of Egress shall comply with CBC 2013 Chapter 10.

DESIGN OCCUPANT LOAD - The number of occupants whom means egress facilities shall be provided. Where occupants from accessory area egress through a primary space, the calculated occupant load for the primary space shall include the total occupant load of the primary space plus the number of occupants egressing through it from the accessory area.

MINIMUM EGRESS WIDTH - The total width of means of egress in inches (mm) shall not be less than the total occupant load served by the means of egress multiplied by 0.3 inches (7.62 mm) per occupant for stairways and by 0.2 inches (5.08 mm) per occupant for other egress components. Multiple means of egress shall be sized such that the loss of any one means of egress shall not reduce the available capacity to less than 50 percent of the required capacity. The maximum capacity required from any story of a building shall be maintained to the termination of the means of egress. (CBC 1005.1)

DOOR ENCROACHMENT - Doors, when fully opened, and handrails shall not reduce the required means of egress width by more than 7 inches (178 mm). Doors in any position shall not reduce the required width by more than one-half. Other nonstructural projections such as trim and similar decorative features shall be permitted to project into the required width a maximum of 11/2 inches (38 mm) on each side. (CBC 1005.2)

EGRESS ILLUMINATION - The means of egress, including the exit discharge, shall be illuminated at all times the building space served by the means of egress is occupied. Egress illumination shall comply with CBC 2013 Section 1006.

ILLUMINATION EMERGENCY POWER - The power supply for means of egress illumination shall normally be provided by the premises' electrical supply.

In the event of power supply failure, an emergency electrical system shall automatically illuminate all of the following areas:

1. Aisles and unenclosed egress stairways in rooms and spaces that require two or more means of egress.
2. Corridors, exit enclosures and exit passageways in buildings required to have two or more exits.
3. Exterior egress components at other than their levels of exit discharge until exit discharge is accomplished for buildings required to have two or more exits.
4. Interior exit discharge elements, as permitted in Section 1027.1, in buildings required to have two or more exits.
5. Exterior landings as required by Section 1008.1.6 for exit discharge doorways in buildings required to have two or more exits.

The emergency power system shall provide power for a duration of not less than 90 minutes and shall consist of storage batteries, unit equipment or an on-site generator. The installation of the emergency power system shall be in accordance with CBC 2013 Section 2702.

Illumination level under emergency power. Emergency lighting facilities shall be arranged to provide initial illumination that is at least an average of I footcandle (11 lux) and a minimum at any point of 0.1 footcandle (1 lux) measured along the path of egress at floor level. Illumination levels shall be permitted to decline to 0.6 footcandle (6 lux) average and a minimum at any point of 0.06 footcandle (0.6 lux) at the end of the emergency lighting time duration. A maximum-to-minimum illumination uniformity ratio of 40 to 1 shall not be exceeded.

TECHNE
DESIGN | DEVELOPMENT
3956 30th Street, San Diego, CA 92104
techne-us.com sustainablearchitect.org
o 619-940-5814 m 313-595-5814

CONSULTANTS

LICENSED ARCHITECT
MICHAEL RENE MORTON
C-19371
REN. 04/30/2015
STATE OF CALIFORNIA

414 29th Avenue
Oakland, CA 94601

OWNER

29th Avenue Group, LLC
1211 Embarcadero Way, Suite D
Oakland, CA 94606

BuildZig
Dream it. Build it. Zig it.

MARK	DATE	DESCRIPTION
01	11.10.14	1st Building Permit Submittal
02	02.23.15	2nd Building Permit Submittal
03	03.13.15	3rd Building Permit Submittal
04	04.02.15	Elevator Revision

4/1/2015 5:18:50 PM

PROJECT NO: 1410

CAD DWG FILE: A113 - THIRD FLOOR EGRESS PLAN - REVISED.DWG

DRAWN BY: A.S, M.M., J.C., J.S.

CHK'D BY: A.S., M.M

COPYRIGHT: TECHNE expressly reserves its common law copyright and other property rights in this document. This document shall not be reproduced, copied, changed or disclosed in any form or manner whatsoever without first obtaining the express written consent of TECHNE.

SHEET TITLE

THIRD FLOOR EGRESS PLAN

A113

SHEET -- OF 100

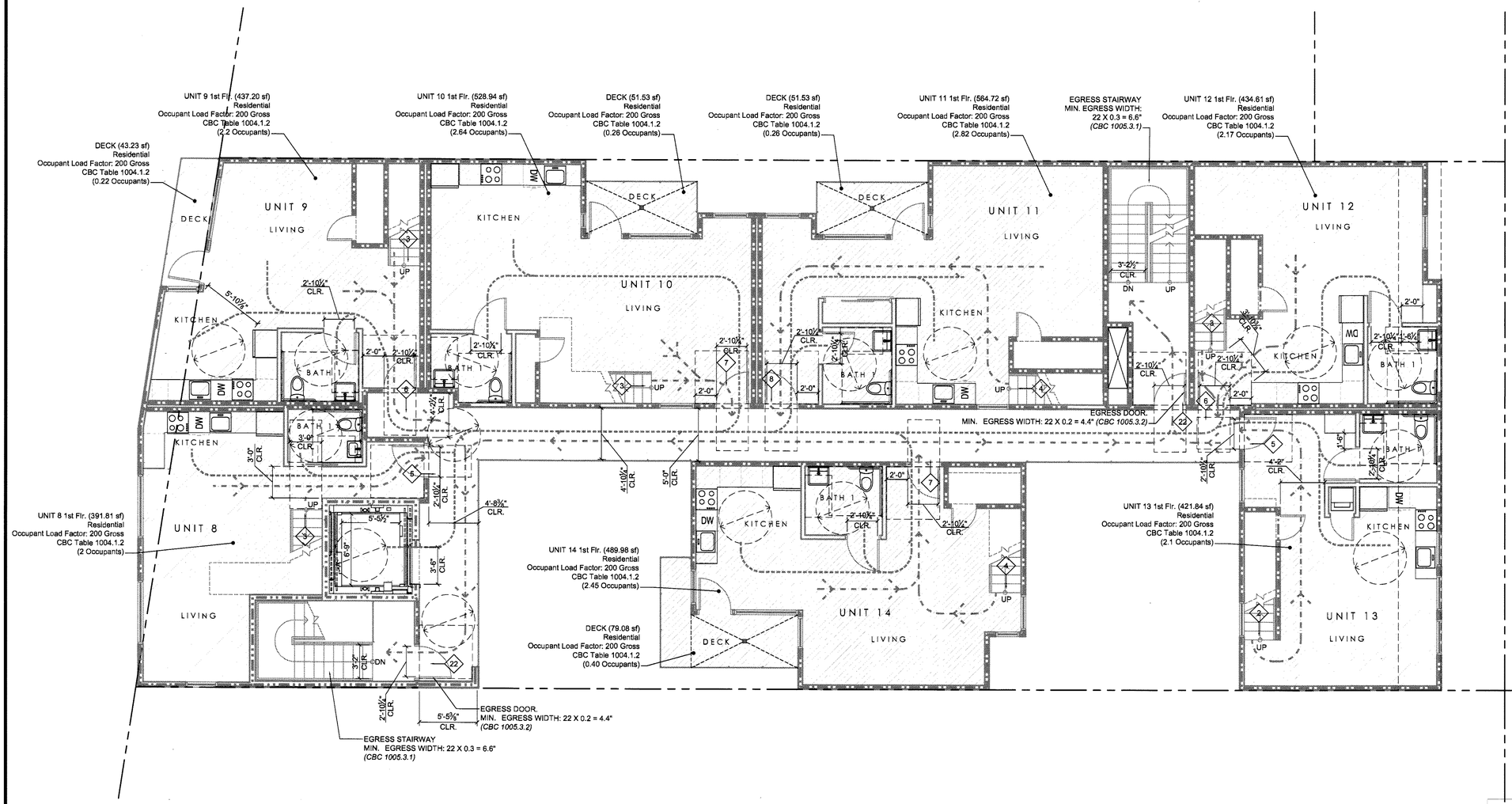

1 FORTH FLOOR EGRESS PLAN
SCALE: 3/16" = 1'-0"

0 2'-8" 5'-4" 10'-8"
SCALE: 3/16" = 1'-0"

N

LOAD CALCULATIONS

SPACES	OCCUPANT LOAD
UNIT 8	6
UNIT 9	5
UNIT 10	7
UNIT 11	8
UNIT 12	6
UNIT 13	5
UNIT 14	7
TOTAL	44

EGRESS PLAN LEGEND

FUNCTION OF SPACE: Parking Garage

FUNCTION OF SPACE: Business Areas

FUNCTION OF SPACE: Residential

ACCESSIBILITY CLEARANCES (See Accessibility Notes, General Conditions and Detail sheet A502) All clearances shall comply with CBC 2013 Chapter 11A and 11B.

ACCESSIBILITY NOTES

1. All entrances and all exterior ground-floor exit doors to buildings and facilities shall be made accessible to persons with disabilities. (Sec. 1133B.1.1.1.1)
2. Latching and locking hand activated doors in a path of travel shall be operable with a single effort by lever type hardware, panic bars, push pull activating bars, or other hardware designed to provide passage without requiring the ability to grasp the opening hardware. Locked exit doors shall operate as above in egress direction. (Sec. 1133B.2.5.2)
3. Hand activated door opening hardware shall be centered between 30 inches (762 mm) and 44 nches (1118 mm) above the floor. (Sec. 1133B.2.5.2)
4. The width and height of doorways shall comply with section 1008. Every required exit doorway shall permit the installation of a door not less than 3 feet \(914 mm\) wide and not less than 6 feet 8 inches (2032 mm) high. Exit doors shall be capable of opening at least 90 degrees and provide not less than 32 inches clear width (813mm). (Sec. 1133B.2.2 and Figure 11B 33\)
5. For hinged doors, the opening width shall be measured with the door positioned at an angle of 90 degrees from its closed position. (Sec. 1133.2.3 and Fig. 11B 33)
6. Minimum maneuvering clearances at doors shall be as shown in Figures 11B-26A and 11B-26B. The floor or ground area within the required clearances shall be level and clear. (Sec.1133B.2.4.2)
7. There shall be a level and clear floor or landing on each side of a door. The level area shall have a length in the direction of door swing of at least 60 inches \(1524 mm\) and the length opposite the direction of door swing of 48 inches (1219 mm) as measured at right angle to the plane of the door in its closed position. (Sec. 1133B.2.4.2 and Fig. 11B 26A and 11B 26B)
8. The width of the level area on the side to which the door swings shall extend 24 inches (610 mm) minimum past the strike edge of the door for exterior doors and 18 inches (457 mm) minimum past the strike edge for interior doors. This also applies to obstructions and recesses. An additional 12 inches is required at the push side if a frontal approach, if door is equipped with both latch and closer. (Sections 1133B.2.4.3, 1133B.2.4.5, 1133B.2.5.3, Figures 11B 26A and B, and 11B-33(a)
9. The floor or landing shall be not more than 1/2 inch (12.7 mm) lower than the threshold of the doorway. Change in level between 1/4 inch (6 mm) and 275 inch (12.7 mm) shall be beveled with a slope no greater than one unit vertical to 2 unit horizontal (50- percent slope) (Sec. 1133B.2.4.1 and Figures 11B 32)
10. The bottom 10 inches (254 mm) of all doors except automatic and sliding shall have a smooth, uninterrupted surface to allow the door to be opened by a wheelchair footrest without creating a trap or hazardous condition. Where narrow frame doors are used, a 10 inch (254 mm) high smooth panel shall be installed on the push side. (Sec 1133.2.6 and Fig 11B 29)
11. Maximum effort to operate doors shall not exceed 5 pounds (22 N) for exterior and interior doors, applied at right angles to hinged doors and at the center plane of sliding or folding doors. Compensating devices or automatic door operators may be utilized. The maximum effort to operate fire doors may be increased up to 15 pounds (66.72N) if allowed by the appropriate administrative authority. (Sec 1133B.2.5)
12. Specific work stations need only comply with the required aisle width (Sections 1133B.6.1 and 1133B.6.2 and floors and levels (Section 1120B). (Sec. 1123B.2)
13. Entry ways to specific work stations shall be 32 inches clear width. (Sec. 1123B.2)
14. PROVIDE PANIC HARDWARE AT ALL EXIT DOORS.
15. Gates used as a component in a means of egress shall conform to the applicable requirements for doors. (Sec 1008.2)
16. Exterior Exit doors shall have a sign posted above stating: DOOR TO REMAIN UNLOCKED DURING REGULAR BUSINESS HOURS.

EGRESS NOTES

FIELD COPY

ACCESSIBLE ROUTE - Accessible routes shall comply with CBC 2013 Section 11B-402. Walking surfaces shall provide clearances complying with CBC 2013 Section 11 B-403.5. The running slope of walking surfaces shall not be steeper than 1:20. The cross slope of walking surfaces shall not be steeper than 1:48. Except as provided in CBC 2013 Sections 11B-403.5.2 and 11B-403.5.3, the clear width of walking surfaces shall be 36 inches (914 mm) minimum. The clear width for walking surfaces in corridors serving an occupant load of 10 or more shall be 44 inches (1118 mm) minimum. The clear width for sidewalks and walks shall be 48 inches (1219 mm) minimum.

MEANS OF EGRESS - A continuous and unobstructed path of vertical and horizontal egress travel from any occupied portion of a building or structure to a public way. A means of egress consists of three separate and distinct parts: the exit access, the exit and the exit discharge. Means of Egress shall comply with CBC 2013 Chapter 10.

DESIGN OCCUPANT LOAD - The number of occupants whom means egress facilities shall be provided. Where occupants from accessory area egress through a primary space, the calculated occupant load for the primary space shall include the total occupant load of the primary space plus the number of occupants egressing through it from the accessory area.

MINIMUM EGRESS WIDTH - The total width of means of egress in inches (mm) shall not be less than the total occupant load served by the means of egress multiplied by 0.3 inches (7.62 mm) per occupant for stairways and by 0.2 inches (5.08 mm) per occupant for other egress components. Multiple means of egress shall be sized such that the loss of any one means of egress shall not reduce the available capacity to less than 50 percent of the required capacity. The maximum capacity required from any story of a building shall be maintained to the termination of the means of egress. (CBC 1005.1)

DOOR ENCROACHMENT - Doors, when fully opened, and handrails shall not reduce the required means of egress width by more than 7 inches (178 mm). Doors in any position shall not reduce the required width by more than one-half. Other nonstructural projections such as trim and similar decorative features shall be permitted to project into the required width a maximum of 11/2 inches (38 mm) on each side. (CBC 1005.2)

EGRESS ILLUMINATION - The means of egress, including the exit discharge, shall be illuminated at all times the building space served by the means of egress is occupied. Egress illumination shall comply with CBC 2013 Section 1006.

ILLUMINATION EMERGENCY POWER - The power supply for means of egress illumination shall normally be provided by the premises' electrical supply.

In the event of power supply failure, an emergency electrical system shall automatically illuminate all of the following areas:

1. Aisles and unenclosed egress stairways in rooms and spaces that require two or more means of egress.
2. Corridors, exit enclosures and exit passageways in buildings required to have two or more exits.
3. Exterior egress components at other than their levels of exit discharge until exit discharge is accomplished for buildings required to have two or more exits.
4. Interior exit discharge elements, as permitted in Section 1027.1, in buildings required to have two or more exits.
5. Exterior landings as required by Section 1008.1.6 for exit discharge doorways in buildings required to have two or more exits.

The emergency power system shall provide power for a duration of not less than 90 minutes and shall consist of storage batteries, unit equipment or an on-site generator. The installation of the emergency power system shall be in accordance with CBC 2013 Section 2702.

Illumination level under emergency power. Emergency lighting facilities shall be arranged to provide initial illumination that is at least an average of I footcandle (11 lux) and a minimum at any point of 0.1 footcandle (1 lux) measured along the path of egress at floor level. Illumination levels shall be permitted to decline to 0.6 footcandle (6 lux) average and a minimum at any point of 0.06 footcandle (0.6 lux) at the end of the emergency lighting time duration. A maximum-to-minimum illumination uniformity ratio of 40 to 1 shall not be exceeded.

TECHNE
DESIGN | DEVELOPMENT
3956 30th Street, San Diego, CA 92104
techne-us.com sustainablearchitect.org
o 619-940-5814 m 313-595-5814

CONSULTANTS

LICENSED ARCHITECT
MICHAEL RENE MORTON
C-19371
REN. 04/30/2015
STATE OF CALIFORNIA

414 29th Avenue
Oakland, CA 94601

OWNER

29th Avenue Group, LLC
1211 Embarcadero Way, Suite D
Oakland, CA 94606

BuildZig
Dream it. Build it. Zig it.

MARK	DATE	DESCRIPTION
D1	11.10.14	1st Building Permit Submittal
D2	02.23.15	2nd Building Permit Submittal
D3	03.13.15	3rd Building Permit Submittal
D4	04.02.15	Elevator Revision

4/1/2015 5:23:48 PM

PROJECT NO: 1410
CAD DWG FILE: A114 - FORTH FLOOR EGRESS PLAN - REVISED.DWG
DRAWN BY: A.S, M.M., J.C., J.S.
CHK'D BY: A.S., M.M

COPYRIGHT: TECHNE expressly reserves its common law copyright and other property rights in this document. This document shall not be reproduced, copied, changed or disclosed in any form or manner whatsoever without first obtaining the express written consent of TECHNE.

SHEET TITLE

FORTH FLOOR EGRESS PLAN

A114

SHEET -- OF 100

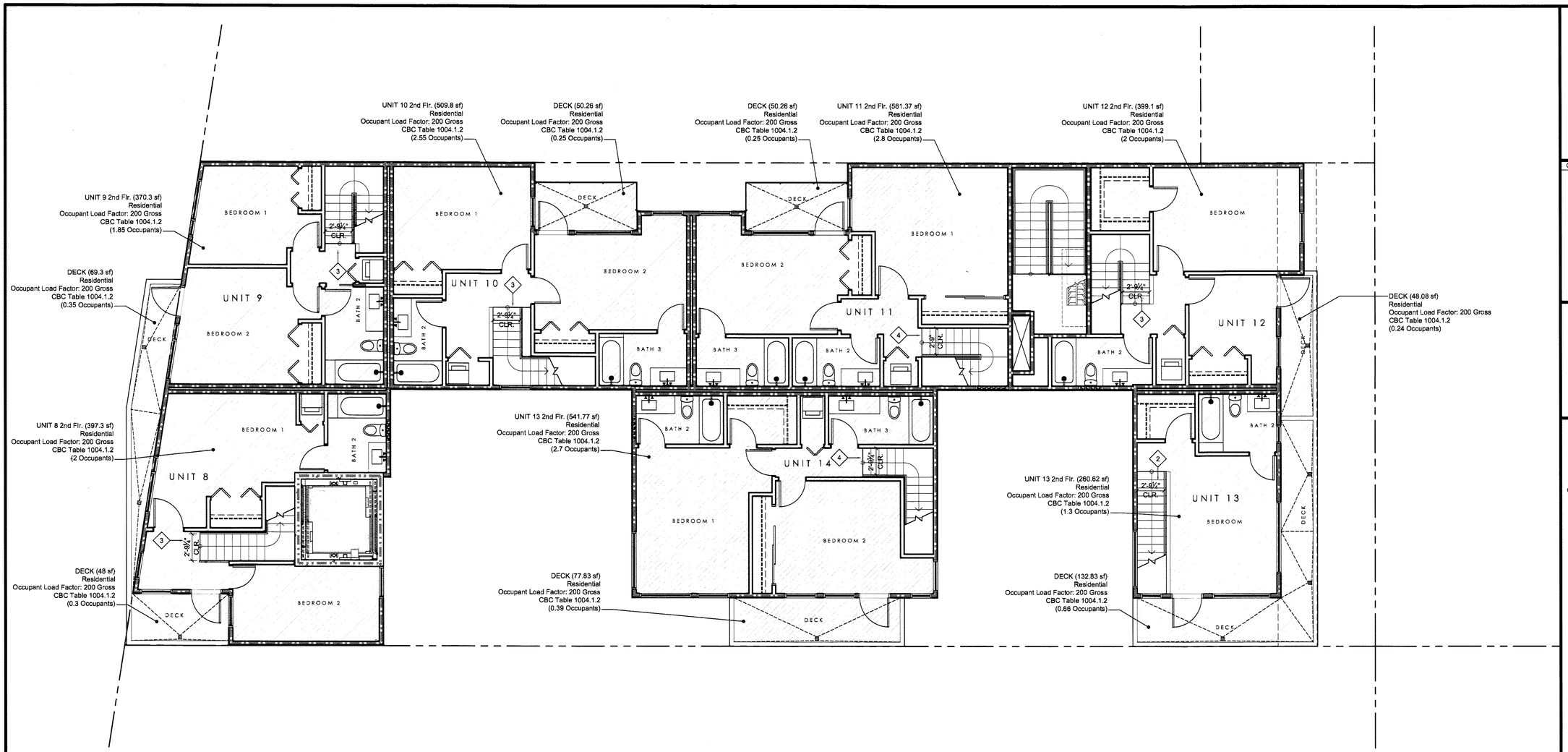

1 FIFTH FLOOR EGRESS PLAN
SCALE: 3/16" = 1'-0"

0 2'-8" 5'-4" 10'-8"
SCALE: 3/16" = 1'-0"

N

FIELD COPY

EGRESS PLAN LEGEND

FUNCTION OF SPACE: Parking Garage

FUNCTION OF SPACE: Business Areas

FUNCTION OF SPACE: Residential

ACCESSIBILITY CLEARANCES (See Accessibility Notes, General Conditions and Detail sheet AS02) All clearances shall comply with CBC 2013 Chapter 11A and 11B.

ACCESSIBILITY NOTES

1. All entrances and all exterior ground-floor exit doors to buildings and facilities shall be made accessible to persons with disabilities. (Sec. 1133B.1.1.1.1)
2. Latching and locking hand activated doors in a path of travel shall be operable with a single effort by lever type hardware, panic bars, push pull activating bars, or other hardware designed to provide passage without requiring the ability to grasp the opening hardware. Locked exit doors shall operate as above in egress direction. (Sec. 1133B.2.5.2)
3. Hand activated door opening hardware shall be centered between 30 inches (762 mm) and 44 nches (1118 mm) above the floor. (Sec. 1133B.2.5.2)
4. The width and height of doorways shall comply with section 1008. Every required exit doorway shall permit the installation of a door not less than 3 feet \(914 mm\) wide and not less than 6 feet 8 inches (2032 mm) high. Exit doors shall be capable of opening at least 90 degrees and provide not less than 32 inches clear width (813mm). (Sec. 1133B.2.2 and Figure 11B 33\)
5. For hinged doors, the opening width shall be measured with the door positioned at an angle of 90 degrees from its closed position. (Sec. 1133.2.3 and Fig. 11B 33)
6. Minimum maneuvering clearances at doors shall be as shown in Figures 11B-26A and 11B-26B. The floor or ground area within the required clearances shall be level and clear. (Sec.1133B.2.4.2)
7. There shall be a level and clear floor or landing on each side of a door. The level area shall have a length in the direction of door swing of at least 60 inches \(1524 mm\) and the length opposite the direction of door swing of 48 inches (1219 mm) as measured at right angle to the plane of the door in its closed position. (Sec. 1133B.2.4.2 and Fig. 11B 26A and 11B 26B)
8. The width of the level area on the side to which the door swings shall extend 24 inches (610 mm) minimum past the strike edge of the door for exterior doors and 18 inches (457 mm) minimum past the strike edge for interior doors. This also applies to obstructions and recesses. An additional 12 inches is required at the push side if a frontal approach, if door is equipped with both latch and closer. (Sections 1133B.2.4.3, 1133B.2.4.5, 1133B.2.5.3, Figures 11B 26A and B, and 11B-33(a)
9. The floor or landing shall be not more than 1/2 inch (12.7 mm) lower than the threshold of the doorway. Change in level between 1/4 inch (6 mm) and 275 inch (12.7 mm) shall be beveled with a slope no greater than one unit vertical to 2 unit horizontal (50- percent slope) (Sec. 1133B.2.4.1 and Figures 11B 32)
10. The bottom 10 inches (254 mm) of all doors except automatic and sliding shall have a smooth, uninterrupted surface to allow the door to be opened by a wheelchair footrest without creating a trap or hazardous condition. Where narrow frame doors are used, a 10 inch (254 mm) high smooth panel shall be installed on the push side. (Sec 1133.2.6 and Fig 11B 29)
11. Maximum effort to operate doors shall not exceed 5 pounds (22 N) for exterior and interior doors, applied at right angles to hinged doors and at the center plane of sliding or folding doors. Compensating devices or automatic door operators may be utilized. The maximum effort to operate fire doors may be increased up to 15 pounds (66.72N) if allowed by the appropriate administrative authority. (Sec 1133B.2.5)
12. Specific work stations need only comply with the required aisle width (Sections 1133B.6.1 and 1133B.6.2 and floors and levels (Section 1120B). (Sec. 1123B.2)
13. Entry ways to specific work stations shall be 32 inches clear width. (Sec. 1123B.2)
14. PROVIDE PANIC HARDWARE AT ALL EXIT DOORS.
15. Gates used as a component in a means of egress shall conform to the applicable requirements for doors. (Sec 1008.2)
16. Exterior Exit doors shall have a sign posted above stating: DOOR TO REMAIN UNLOCKED DURING REGULAR BUSINESS HOURS.

EGRESS NOTES

ACCESSIBLE ROUTE - Accessible routes shall comply with CBC 2013 Section 11B-402. Walking surfaces shall provide clearances complying with CBC 2013 Section 11 B-403.5. The running slope of walking surfaces shall not be steeper than 1:20. The cross slope of walking surfaces shall not be steeper than 1:48. Except as provided in CBC 2013 Sections 11B-403.5.2 and 11B-403.5.3, the clear width of walking surfaces shall be 36 inches (914 mm) minimum. The clear width for walking surfaces in corridors serving an occupant load of 10 or more shall be 44 inches (1118 mm) minimum. The clear width for sidewalks and walks shall be 48 inches (1219 mm) minimum.

MEANS OF EGRESS - A continuous and unobstructed path of vertical and horizontal egress travel from any occupied portion of a building or structure to a public way. A means of egress consists of three separate and distinct parts: the exit access, the exit and the exit discharge. Means of Egress shall comply with CBC 2013 Chapter 10.

DESIGN OCCUPANT LOAD - The number of occupants whom means egress facilities shall be provided. Where occupants from accessory area egress through a primary space, the calculated occupant load for the primary space shall include the total occupant load of the primary space plus the number of occupants egressing through it from the accessory area.

MINIMUM EGRESS WIDTH - The total width of means of egress in inches (mm) shall not be less than the total occupant load served by the means of egress multiplied by 0.3 inches (7.62 mm) per occupant for stairways and by 0.2 inches (5.08 mm) per occupant for other egress components. Multiple means of egress shall be sized such that the loss of any one means of egress shall not reduce the available capacity to less than 50 percent of the required capacity. The maximum capacity required from any story of a building shall be maintained to the termination of the means of egress. (CBC 1005.1)

DOOR ENCROACHMENT - Doors, when fully opened, and handrails shall not reduce the required means of egress width by more than 7 inches (178 mm). Doors in any position shall not reduce the required width by more than one-half. Other nonstructural projections such as trim and similar decorative features shall be permitted to project into the required width a maximum of 11/2 inches (38 mm) on each side. (CBC 1005.2)

EGRESS ILLUMINATION - The means of egress, including the exit discharge, shall be illuminated at all times the building space served by the means of egress is occupied. Egress illumination shall comply with CBC 2013 Section 1006.

ILLUMINATION EMERGENCY POWER - The power supply for means of egress illumination shall normally be provided by the premises' electrical supply.

In the event of power supply failure, an emergency electrical system shall automatically illuminate all of the following areas:

1. Aisles and unenclosed egress stairways in rooms and spaces that require two or more means of egress.
2. Corridors, exit enclosures and exit passageways in buildings required to have two or more exits.
3. Exterior egress components at other than their levels of exit discharge until exit discharge is accomplished for buildings required to have two or more exits.
4. Interior exit discharge elements, as permitted in Section 1027.1, in buildings required to have two or more exits.
5. Exterior landings as required by Section 1008.1.6 for exit discharge doorways in buildings required to have two or more exits.

The emergency power system shall provide power for a duration of not less than 90 minutes and shall consist of storage batteries, unit equipment or an on-site generator. The installation of the emergency power system shall be in accordance with CBC 2013 Section 2702.

Illumination level under emergency power. Emergency lighting facilities shall be arranged to provide initial illumination that is at least an average of I footcandle (11 lux) and a minimum at any point of 0.1 footcandle (1 lux) measured along the path of egress at floor level. Illumination levels shall be permitted to decline to 0.6 footcandle (6 lux) average and a minimum at any point of 0.06 footcandle (0.6 lux) at the end of the emergency lighting time duration. A maximum-to-minimum illumination uniformity ratio of 40 to 1 shall not be exceeded.

TECHNE
DESIGN | DEVELOPMENT
3956 30th Street, San Diego, CA 92104
techne-us.com sustainablearchitect.org
o 619-940-5814 m 313-595-5814

CONSULTANTS

LICENSED ARCHITECT
MICHAEL RENE MORTON
C-19371
REN. 04/30/2015
STATE OF CALIFORNIA

414 29th Avenue
Oakland, CA 94601

OWNER

29th Avenue Group, LLC
1211 Embarcadero Way, Suite D
Oakland, CA 94606

BuildZig
Dream it. Build it. Zig it.

MARK	DATE	DESCRIPTION
01	11.10.14	1st Building Permit Submittal
02	02.23.15	2nd Building Permit Submittal
03	03.13.15	3rd Building Permit Submittal
04	04.02.15	Elevator Revision

4/1/2015 1:36:04 PM

PROJECT NO: 1410
CAD DWG FILE: A115 - FIFTH FLOOR EGRESS PLAN - REVISED DWG
DRAWN BY: A.S, M.M., J.C., J.S.
CHK'D BY: A.S., M.M

COPYRIGHT: TECHNE expressly reserves its common law copyright and other property rights in this document. This document shall not be reproduced, copied, changed or disclosed in any form or manner whatsoever without first obtaining the express written consent of TECHNE

SHEET TITLE
FIFTH FLOOR EGRESS PLAN

A115
SHEET -- OF 100

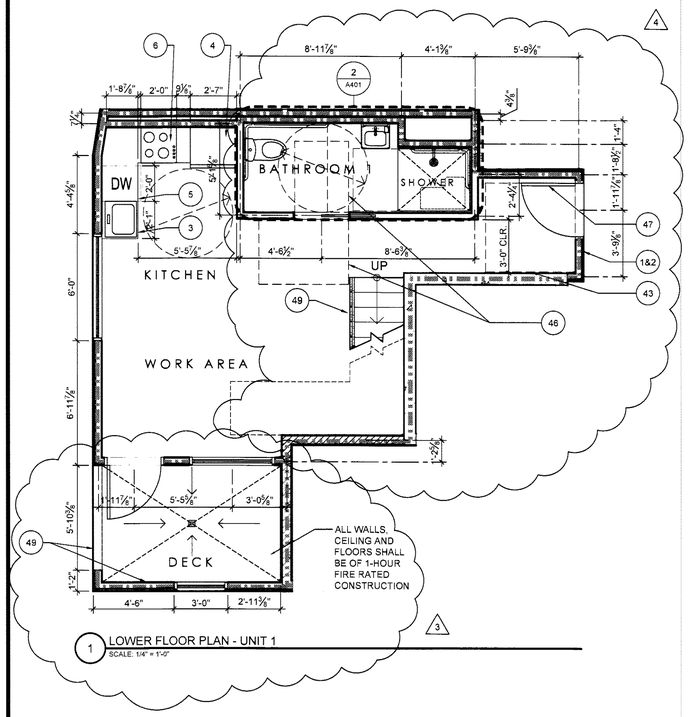

1 LOWER FLOOR PLAN - UNIT 1
SCALE: 1/4" = 1'-0"

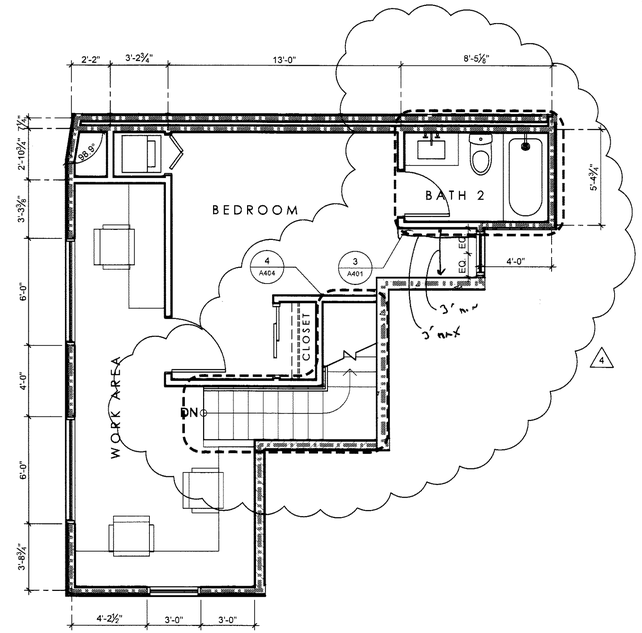

2 UPPER FLOOR PLAN - UNIT 1
SCALE: 1/4" = 1'-0"

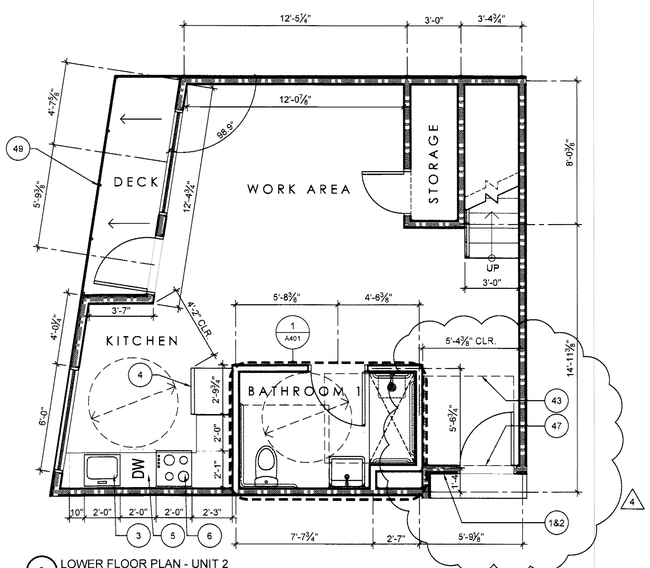

3 LOWER FLOOR PLAN - UNIT 2
SCALE: 1/4" = 1'-0"

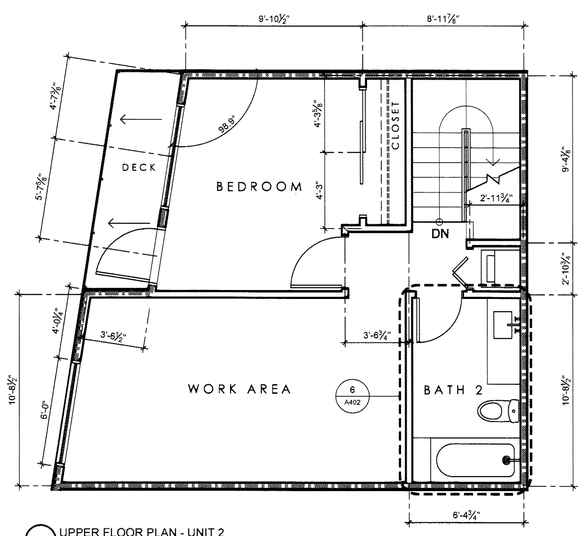

4 UPPER FLOOR PLAN - UNIT 2
SCALE: 1/4" = 1'-0"

FLOOR PLAN KEYNOTES

ENTRY

1. Every unit shall be provided with a door buzzer, bell, chime or equivalent (CBC 11B2A)
2. Entry door unit signage per detail

KITCHEN REQUIREMENTS

3. 24" OR 30" KITCHEN SINK WITH GARBAGE DISPOSAL: Owner to select. Kitchen counter top height at 36" A.F.F. (U.N.O.)
4. 30" REFRIGERATOR: Owner to select
5. 24" DISHWASHER: Owner to select
6. 24" OR 30" RANGE: Owner to select
7. STACKABLE WASHER AND DRYER: Owner to select
8. KITCHEN SINK BASE CABINET: Base cabinets directly under sink shall be removable to provide clearance for wheelchair. provide cabinet sides and extend finished flooring under cabinets to rear wall per CBC sec. 1134A.3.
9. KITCHEN SPACE: Clear width per CBC sec. 1133A.2.1.
10. WORK SPACE: 30" wide kitchen work surface per CBC sec. 1133A.4.
11. REPOSITIONABLE COUNTERTOP: Area designated to meet requirement of 5% of units to provide repositionable kitchen countertop height (to 28" min.) at sink and work space, per CBC sec. 1133A.4.1. Base cabinets directly under sink shall be removable to provide clearance for wheelchair. provide durable, non-absorbent cabinet sides and extend finished flooring under cabinets to rear wall.
12. UPPER CABINETS: Owner to select. Provide 2x blocking at upper cabinet locations.
13. 48" clear space adjacent to range or cook-top including handle.
14. LOWER SHELVING: Kitchens require lower shelving and/or drawer spaces to be provided at a height of not more than 48 inches above the floor, per sec. 1133A.5

BATHROOM
(Owner many substitute with approval from TECHNE)

15.	SHOWER HEAD and MIXER	- KOHLER Stillness Shower Trim Set
16.	SHOWER HEAD, MIXER and DIVERTER	- KOHLER Stillness Shower Trim Set and Diverter
17.	ADA HAND HELD SHOWER	- KOHLER Stilness Handshower kit K-9059
18.	TOILET and SEAT	- TOTO Aquia® Close Coupled Toilet and seat
19.	ADA TOILET and SEAT	- TOTO Drake® II 1G™
20.	BATHROOM FAUCET	- KOHLER Stillness K-942-4 faucet
21.	SINGLE HOLE FAUCET	- HANSGROHE Metric S 31060001 faucet
22.	UNDERMOUNT SINK	- TOTO LT191(G) Undermount lavatory
23.	ADA FREESTANDING SINK	- KOHLER Reve K-5027
24.	BATHTUB	- KOHLER K-1946-LA
25.	ADA SHOWER TYPE 1	- 30" x 60" clear space. See interior elevations.
26.	ADA SHOWER TYPE 2	- 48" X 42" clear space. See interior elevations.
27.	NOT USED	
28.	NOT USED	

29. ADA TOILET FLOOR SPACE: 48"W X 36"D min. clear per CBC sec. 1134A.7.
30. ADA BATHTUB FLOOR SPACE: 30"W X 48"L min.clear per CBC sec. 1134A.5
31. ADA SHOWER FLOOR SPACE: 30"W X 48"L min. clear at alternative roll-in shower per CBC sec. 1134A.6 & fig. 11A-9K. (Or 30"W X 42"L for alternate rollin-in shower)
32. ADA LAVATORY FLOOR SPACE: 30"W X 48"L min. clear per CBC sec. 1134A.8. Base cabinets directly under sink shall be removable to provide clearance for wheelchair. Provide cabinet sides and extend finished flooring under cabinets to rear wall. Max. height of fixture rim to be 34".
33. TOILET REAR/SIDE WALL GRAB BAR & REINFORCEMENT: Toilet grab bar for accessible bathrooms shall be Bobrick B68137 36" x 54". Provide 2X backing at rear wall 32" to 38" A.F.F.. Extend 40" min. in length behind water closet and 26" min. in front of water closet (6" Min. in height. - Must support 250 lbs. min.), per CBC sec. 1134.7.2. When not adjacent to side wall, provide reinforcement for installation of floor-mounted, fold away or similar alternative grab bar.
34. BATHTUB BACK WALL GRAB BAR REINFORCEMENT: Provide 2x backing at the back wall 6" max. above the bathtub rim, extending to 38" min. in height A.F.F.. Extend horizontally 48" in length, with each end 6" max. from each end wall. (6" min. in height. - must support 250 lbs. min.), per CBC sec. 1134.5.2
35. BATHTUB END WALL GRAB BAR REINFORCEMENT: Provide 2x backing at each end wall 32" to 38" A.F.F. starting at the front face of tub and extending 24" min. toward back wall. (6" min. in ht. - must support 250 lbs. min.), per CBC sec. 1134A.5.2.
36. SHOWER WALL GRAB BAR & REINFORCEMENT: Provide continuous 2x backing at all walls 32" to 38" a.f.f. (6" min. in ht. - must support 250 lbs. min.), per CBC sec. 1134A.6.4. When walls are glass, provide reinforcement for installation of floor-mounted or ceiling-mounted grab bars.
37. BATHROOM COUNTERTOP: Height at 34" A.F.F. Owner to select material.

CLOSET

38. Shelf and pole per owner (U.N.O.)

LINEN

39. Per owner (U.N.O.)

MECHANICAL

40. Typical water heater per MEP
41. Furnace per MEP
42. Main electrical panel per MEP

DOOR

43. PULL SIDE AND PUSH SIDE FRONT APPROACH DOOR CLEARANCE: Per CBC sec. 1126A & fig. 11A-8A.
44. HINGE SIDE PULL SIDE AND PUSH SIDE APPROACH DOOR CLEARANCE: Per CBC sec. 1126A & fig. 11A-8B.
45. LATCH SIDE PULL SIDE AND PUSH SIDE APPROACH DOOR CLEARANCE: Per CBC sec. 1126A & fig. 11A-8C.
46. LATCH SIDE APPROACH POCKET DOOR CLEARANCE: Per CBC sec. 1126A & fig. 11A-8F.
47. ACCESSIBLE DOOR THRESHOLD: Per CBC sec. 1132A.4.

GENERAL REQUIREMENTS

48. LINE OF SOFFIT ABOVE
49. GUARDRAIL OR SHORT WALL AT 42" A.F.F. (U.N.O.)

FLOOR PLAN NOTES

A. The General Contractor or Sub-Contractor shall verify all conditions or dimensions on these plans in the field with actual site conditions.
B. Written dimensions shall take precedence over scaled dimensions and shall be verified on the job site. On-site verification of all dimensions and conditions shall be the sole responsibility of the General Contractor and Sub-Contractors.
C. The Contractor or sub-contractor shall notify TECHNE if any conflicts or discrepancy occurs between this information on this plan and actual field conditions.
D. Any discrepancies with this drawing affecting project layout shall be brought to the attention of TECHNE. Do not proceed with work until written or verbal instructions are issued by TECHNE.
E. INSULATION: R-13 Batt Insulation at all Exterior 2 X 4 Walls.
R-13 Batt Insulation at all accessible interior walls for sound control.
R-30 Batt Insulation at 2 X 10 Ceiling, Raised Floor & Roof Areas.
R-4.5 Insulation Wrap on all New Hot Water Piping.
R-4.5 Insulation Wrap on all New Supply Ducts.
F. SMOKE DETECTORS: Shall be installed in each bedroom, in access points to each sleeping area and in each story and basements. Detector shall have an alarm audible in all sleeping areas of the unit. Smoke alarms are required to be interconnected in such a manner that the activation of an alarm will activate all the alarms in the individual unit. Units shall be permanently wired to the building wiring and equipped with battery backup.
G. SHOWER COMPARTMENTS: Shower compartments and bathtubs with installed shower heads shall be finished with a nonabsorbent surface that extends to a height of not less than 6 feet above the floor. *CRC R307.2*

DIMENSIONS

- EXTERIOR WALL DIMENSIONS TO FACE OF FINISH (U.N.O.)
- INTERIOR WALL DIMENSIONS TO CENTER LINE OF STUD (U.N.O.)
- CLEARANCE DIMENSIONS ARE TO FACE OF FINISH MATERIALS, NOTED WITH CLR.

FLOOR PLAN LEGEND

FIELD COPY

- EXTERIOR WALL: 2X4 wood stud @ 16" O.C. with 1 layer of ⅝" gypsum board inside, ⅞" sheathing +⅞" stucco on outside.
- EXTERIOR WALL: 2X6 wood stud @ 16" O.C. with 1 layer of ⅝" gypsum board inside, ⅞" sheathing +⅞" stucco on outside.
- INTERIOR WALL: 2X4 wood stud @ 16" O.C. with 1 layer of ⅝" gypsum board on each side.
- INTERIOR WALL: 2X6 wood stud @ 16" O.C. with 1 layer of ⅝" gypsum board on each side.
- 1 HOUR FIRE RATED WALL: 2X4 wood stud @ 16" O.C. with 1 layer of ⅝" gypsum board on inside and ⅞" cement plaster on outside. Per CBC 2013 Table 721.1(2) Item Number 15-1.3
- WALL OPENING: 80" high u.n.o. Finished with ⅝" gypsum board with square corners.
- 3½" U.N.O. — DOOR AND SYMBOL. See door schedule for complete information
- 1 — WINDOW AND SYMBOL. See window schedule for complete information

TECHNE
DESIGN | DEVELOPMENT
3956 30th Street, San Diego, CA 92104
techne-us.com sustainablearchitect.org
o 619-940-5814 m 313-595-5814

CONSULTANTS

LICENSED ARCHITECT
MICHAEL RENE MORTON
C-19371
REN. 04/30/2015
STATE OF CALIFORNIA

414 29th Avenue
Oakland, CA 94601

OWNER

29th Avenue Group, LLC
1211 Embarcadero Way, Suite D
Oakland, CA 94606

BuildZig
Dream it. Build it. Zig it.

MARK	DATE	DESCRIPTION
D1	11.10.14	1st Building Permit Submittal
D2	02.23.15	2nd Building Permit Submittal
D3	03.13.15	3rd Building Permit Submittal
D4	04.02.15	Elevator Revision
D5	04.09.15	Permit Set

4/2/2015 8:26:18 AM

PROJECT NO: 1410
CAD DWG FILE: A116 - UNIT PLANS - PROPOSED.DWG
DRAWN BY: A.S., M.M., J.C., J.S.
CHK'D BY: A.S., M.M

COPYRIGHT: TECHNE expressly reserves its common law copyright and other property rights in this document. This document shall not be reproduced, copied, changed or disclosed in any form or manner whatsoever without first obtaining the express written consent of TECHNE.

SHEET TITLE
UNIT PLANS - PROPOSED - 1 & 2

A116

SHEET -- OF 100

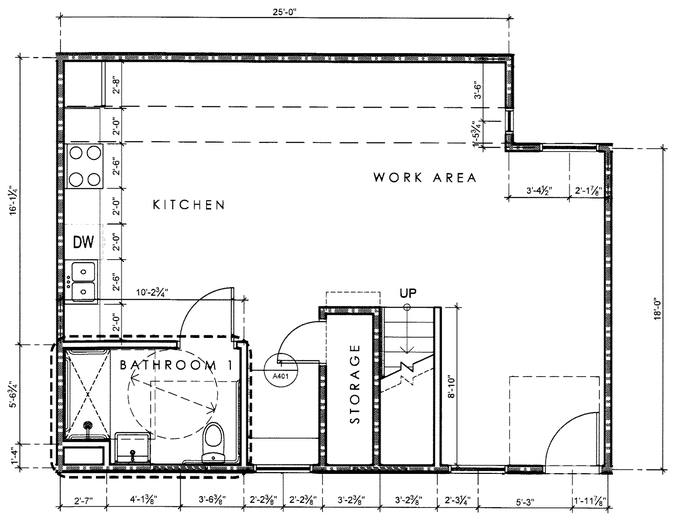

1 LOWER FLOOR PLAN - UNIT 3
SCALE: 1/4" = 1'-0"

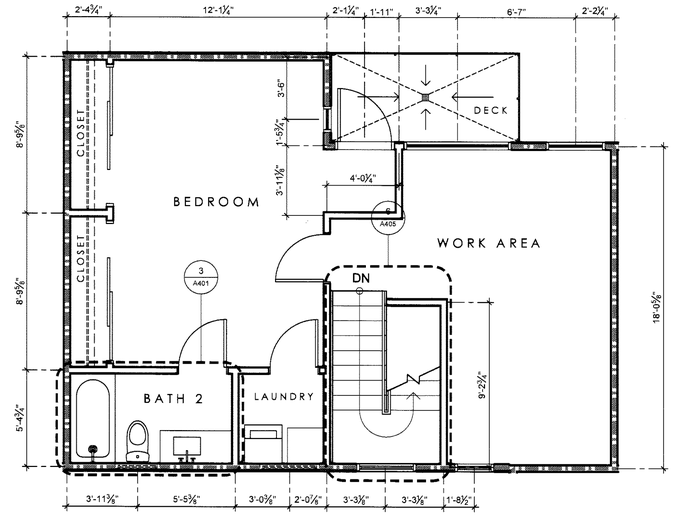

2 UPPER FLOOR PLAN - UNIT 3
SCALE: 1/4" = 1'-0"

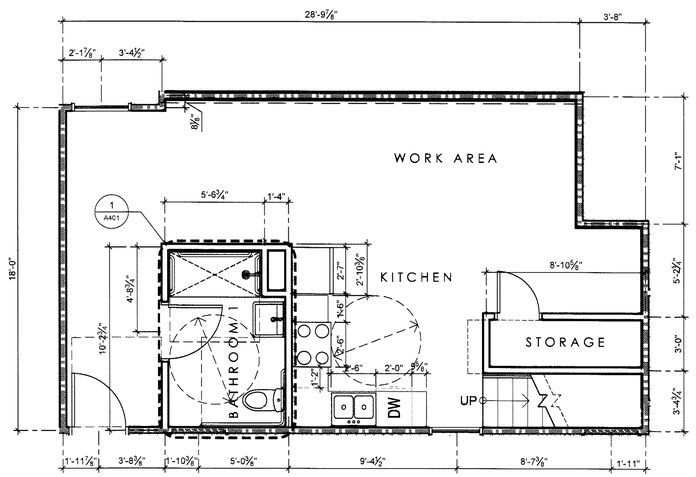

3 LOWER FLOOR PLAN - UNIT 4
SCALE: 1/4" = 1'-0"

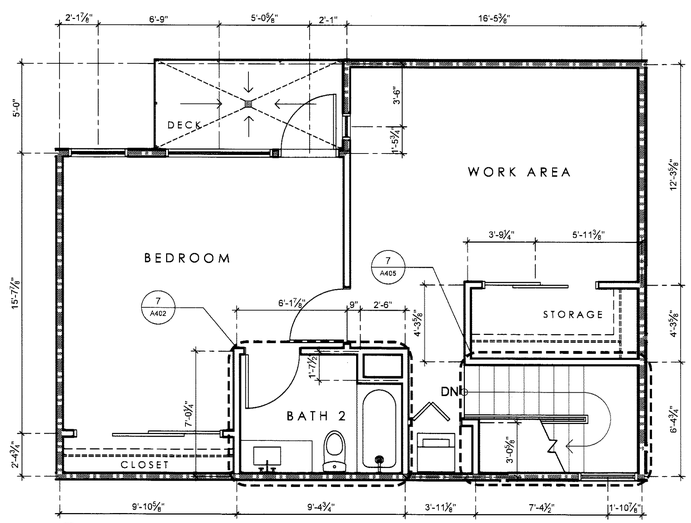

4 UPPER FLOOR PLAN - UNIT 4
SCALE: 1/4" = 1'-0"

FLOOR PLAN KEYNOTES

ENTRY

1. Every unit shall be provided with a door buzzer, bell, chime or equivalent (CBC 11B2A)
2. Entry door unit signage per detail

KITCHEN REQUIREMENTS

3. 24" OR 30" KITCHEN SINK WITH GARBAGE DISPOSAL: Owner to select. Kitchen counter top height at 36" A.F.F. (U.N.O.)
4. 30" REFRIGERATOR: Owner to select
5. 24" DISHWASHER: Owner to select
6. 24" OR 30" RANGE: Owner to select
7. STACKABLE WASHER AND DRYER: Owner to select
8. KITCHEN SINK BASE CABINET: Base cabinets directly under sink shall be removable to provide clearance for wheelchair. provide cabinet sides and extend finished flooring under cabinets to rear wall per CBC sec. 1134A.3.
9. KITCHEN SPACE: Clear width per CBC sec. 1133A.2.1.
10. WORK SPACE: 30" wide kitchen work surface per CBC sec. 1133A.4.
11. REPOSITIONABLE COUNTERTOP: Area designated to meet requirement of 5% of units to provide repositionable kitchen countertop height (to 28" min.) at sink and work space, per CBC sec. 1133A.4.1. Base cabinets directly under sink shall be removable to provide clearance for wheelchair. provide durable, non-absorbent cabinet sides and extend finished flooring under cabinets to rear wall.
12. UPPER CABINETS: Owner to select. Provide 2x blocking at upper cabinet locations.
13. 48" clear space adjacent to range or cook-top including handle.
14. LOWER SHELVING: Kitchens require lower shelving and/or drawer spaces to be provided at a height of not more than 48 inches above the floor, per sec. 1133A.5

BATHROOM
(Owner many substitute with approval from TECHNE)

15. SHOWER HEAD and MIXER - KOHLER Stillness Shower Trim Set
16. SHOWER HEAD, MIXER and DIVERTER - KOHLER Stillness Shower Trim Set and Diverter
17. ADA HAND HELD SHOWER - KOHLER Stillness Handshower kit K-9059
18. TOILET and SEAT - TOTO Aquia® Close Coupled Toilet and seat
19. ADA TOILET and SEAT - TOTO Drake® II 1G™
20. BATHROOM FAUCET - KOHLER Stillness K-942-4 faucet
21. SINGLE HOLE FAUCET - HANSGROHE Metric S 31060001 faucet
22. UNDERMOUNT SINK - TOTO LT191(G) Undermount lavatory
23. ADA FREESTANDING SINK - KOHLER Reve K-5027
24. BATHTUB - KOHLER K-1946-LA
25. ADA SHOWER TYPE 1 - 30" x 60" clear space. See interior elevations.
26. ADA SHOWER TYPE 2 - 48" X 42" clear space. See interior elevations.
27. NOT USED
28. NOT USED
29. ADA TOILET FLOOR SPACE: 48"W X 36"D min. clear per CBC sec. 1134A.7.
30. ADA BATHTUB FLOOR SPACE: 30"W X 48"L min.clear per CBC sec. 1134A.5
31. ADA SHOWER FLOOR SPACE: 30"W X 48"L min. clear at alternative roll-in shower per CBC sec. 1134A.6 & fig. 11A-9K. (Or 30"W X 42"L for alternate rollin-in shower)
32. ADA LAVATORY FLOOR SPACE: 30"W X 48"L min. clear per CBC sec. 1134A.8. Base cabinets directly under sink shall be removable to provide clearance for wheelchair. Provide cabinet sides and extend finished flooring under cabinets to rear wall. Max. height of fixture rim to be 34".
33. TOILET REAR/SIDE WALL GRAB BAR & REINFORCEMENT: Toilet grab bar for accessible bathrooms shall be Bobrick B68137 36" x 54". Provide 2X backing at rear wall 32" to 38" A.F.F.. Extend 40" min. in length behind water closet and 26" min. in front of water closet (6" Min. in height. - Must support 250 lbs. min.), per CBC sec. 1134.7.2. When not adjacent to side wall, provide reinforcement for installation of floor-mounted, fold away or similar alternative grab bar.
34. BATHTUB BACK WALL GRAB BAR REINFORCEMENT: Provide 2x backing at the back wall 6" max. above the bathtub rim, extending to 38" min. in height A.F.F.. Extend horizontally 48" in length, with each end 6" max. from each end wall. (6" min. in height. - must support 250 lbs. min.), per CBC sec. 1134.5.2
35. BATHTUB END WALL GRAB BAR REINFORCEMENT: Provide 2x backing at each end wall 32" to 38" A.F.F. starting at the front face of tub and extending 24" min. toward back wall. (6" min. in ht. - must support 250 lbs. min.), per CBC sec. 1134A.5.2.
36. SHOWER WALL GRAB BAR & REINFORCEMENT: Provide continuous 2x backing at all walls 32" to 38" a.f.f. (6" min. in ht. - must support 250 lbs. min.), per CBC sec. 1134A.6.4. When walls are glass, provide reinforcement for installation of floor-mounted or ceiling-mounted grab bars.
37. BATHROOM COUNTERTOP: Height at 34" A.F.F. Owner to select material.

CLOSET

38. Shelf and pole per owner (U.N.O.)

LINEN

39. Per owner (U.N.O.)

MECHANICAL

40. Typical water heater per MEP
41. Furnace per MEP
42. Main electrical panel per MEP

DOOR

43. PULL SIDE AND PUSH SIDE FRONT APPROACH DOOR CLEARANCE: Per CBC sec. 1126A & fig. 11A-8A.
44. HINGE SIDE PULL SIDE AND PUSH SIDE APPROACH DOOR CLEARANCE: Per CBC sec. 1126A & fig. 11A-8B.
45. LATCH SIDE PULL SIDE AND PUSH SIDE APPROACH DOOR CLEARANCE: Per CBC sec. 1126A & fig. 11A-8C.
46. LATCH SIDE APPROACH POCKET DOOR CLEARANCE: Per CBC sec. 1126A & fig. 11A-8F.
47. ACCESSIBLE DOOR THRESHOLD: Per CBC sec. 1132A.4.

GENERAL REQUIREMENTS

48. LINE OF SOFFIT ABOVE
49. GUARDRAIL OR SHORT WALL AT 42" A.F.F. (U.N.O.)

FLOOR PLAN LEGEND

EXTERIOR WALL: 2X4 wood stud @ 16" O.C. with 1 layer of ½" gypsum board inside, ⅝" sheathing +⅞" stucco on outside.

EXTERIOR WALL: 2X6 wood stud @ 16" O.C. with 1 layer of ½" gypsum board inside, ⅝" sheathing +⅞" stucco on outside.

INTERIOR WALL: 2X4 wood stud @ 16" O.C. with 1 layer of ½" gypsum board on each side.

INTERIOR WALL: 2X6 wood stud @ 16" O.C. with 1 layer of ½" gypsum board on each side.

1 HOUR FIRE RATED WALL: 2X4 wood stud @ 16" O.C. with 1 layer of ½" gypsum board on inside and ⅞" cement plaster on outside. Per CBC 2013 Table 721.1(2) Item Number 15-1.3

WALL OPENING: 80" high u.n.o. Finished with ½" gypsum board with square corners.

3½" U.N.O.

DOOR AND SYMBOL. See door schedule for complete information

WINDOW AND SYMBOL. See window schedule for complete information

1

FIELD COPY

TECHNE
DESIGN | DEVELOPMENT
3956 30th Street, San Diego, CA 92104
techne-us.com sustainablearchitect.org
o 619-940-5814 m 313-595-5814

CONSULTANTS

LICENSED ARCHITECT
MICHAEL RENE MORTON
C-19371
REN. 04/30/2015
STATE OF CALIFORNIA

414 29th Avenue
Oakland, CA 94601

OWNER

29th Avenue Group, LLC
1211 Embarcadero Way, Suite D
Oakland, CA 94606

BuildZig
Dream it. Build it. Zig it.

MARK	DATE	DESCRIPTION
01	11.10.14	1st Building Permit Submittal
02	02.23.15	2nd Building Permit Submittal

02/4/2015 1:44:07 PM

PROJECT NO: 1410
CAD DWG FILE: A116 - UNIT PLANS - PROPOSED DWG
DRAWN BY: A.S, M.M., J.C., J.S.
CHK'D BY: A.S., M.M

COPYRIGHT: TECHNE expressly reserves its common law copyright and other property rights in this document. This document shall not be reproduced, copied, changed or disclosed in any form or manner whatsoever without first obtaining the express written consent of TECHNE.

SHEET TITLE
UNIT PLANS - PROPOSED - 3 & 4

A117

SHEET -- OF 100

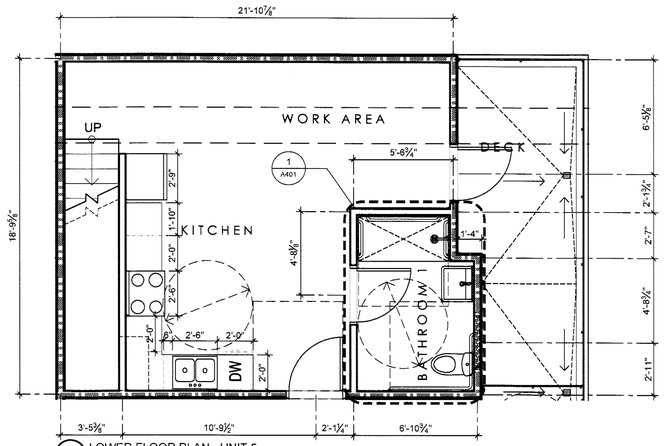

1 LOWER FLOOR PLAN - UNIT 5
SCALE: 1/4" = 1'-0"

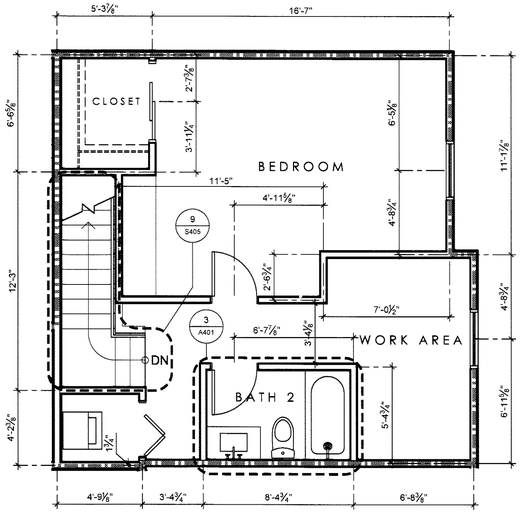

2 UPPER FLOOR PLAN - UNIT 5
SCALE: 1/4" = 1'-0"

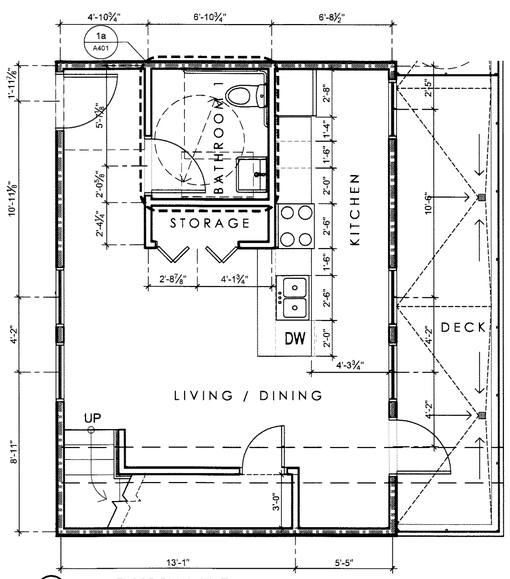

3 LOWER FLOOR PLAN - UNIT 6
SCALE: 1/4" = 1'-0"

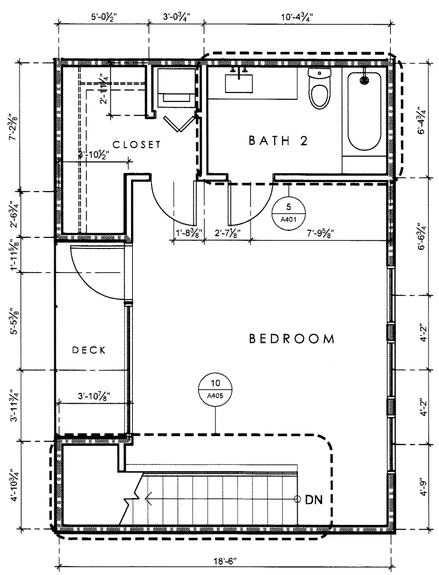

4 UPPER FLOOR PLAN - UNIT 6
SCALE: 1/4" = 1'-0"

FLOOR PLAN NOTES

A. The General Contractor or Sub-Contractor shall verify all conditions or dimensions on these plans in the field with actual site conditions.
B. Written dimensions shall take precedence over scaled dimensions and shall be verified on the job site. On-site verification of all dimensions and conditions shall be the sole responsibility of the General Contractor and Sub-Contractors.
C. The Contractor or sub-contractor shall notify TECHNE if any conflicts or discrepancy occurs between this information on this plan and actual field conditions.
D. Any discrepancies with this drawing affecting project layout shall be brought to the attention of TECHNE. Do not proceed with work until written or verbal instructions are issued by TECHNE.
E. INSULATION: R-13 Batt Insulation at all Exterior 2 X 4 Walls.
R-13 Batt Insulation at all accessible interior walls for sound control.
R-30 Batt Insulation at 2 X 10 Ceiling, Raised Floor & Roof Areas.
R-4.5 Insulation Wrap on all New Hot Water Piping.
R-4.5 Insulation Wrap on all New Supply Ducts.
F. SMOKE DETECTORS: Shall be installed in each bedroom, in access points to each sleeping area and in each story and basements. Detector shall have an alarm audible in all sleeping areas of the unit. Smoke alarms are required to be interconnected in such a manner that the activation of an alarm will activate all the alarms in the individual unit. Units shall be permanently wired to the building wiring and equipped with battery backup.
G. SHOWER COMPARTMENTS: Shower compartments and bathtubs with installed shower heads shall be finished with a nonabsorbent surface that extends to a height of not less than 6 feet above the floor. *CRC R307.2*

DIMENSIONS

- EXTERIOR WALL DIMENSIONS TO FACE OF FINISH (U.N.O.)
- INTERIOR WALL DIMENSIONS TO CENTER LINE OF STUD (U.N.O.)
- CLEARANCE DIMENSIONS ARE TO FACE OF FINISH MATERIALS, NOTED WITH CLR.

FLOOR PLAN KEYNOTES

ENTRY

1. Every unit shall be provided with a door buzzer, bell, chime or equivalent (CBC 11B2A)
2. Entry door unit signage per detail

KITCHEN REQUIREMENTS

3. 24" OR 30" KITCHEN SINK WITH GARBAGE DISPOSAL: Owner to select. Kitchen counter top height at 36" A.F.F. (U.N.O.)
4. 30" REFRIGERATOR: Owner to select
5. 24" DISHWASHER: Owner to select
6. 24" OR 30" RANGE: Owner to select
7. STACKABLE WASHER AND DRYER: Owner to select
8. KITCHEN SINK BASE CABINET: Base cabinets directly under sink shall be removable to provide clearance for wheelchair. provide cabinet sides and extend finished flooring under cabinets to rear wall per CBC sec. 1134A.3.
9. KITCHEN SPACE: Clear width per CBC sec. 1133A.2.1.
10. WORK SPACE: 30" wide kitchen work surface per CBC sec. 1133A.4.
11. REPOSITIONABLE COUNTERTOP: Area designated to meet requirement of 5% of units to provide repositionable kitchen countertop height (to 28" min.) at sink and work space, per CBC sec. 1133A.4.1. Base cabinets directly under sink shall be removable to provide clearance for wheelchair. provide durable, non-absorbent cabinet sides and extend finished flooring under cabinets to rear wall.
12. UPPER CABINETS: Owner to select. Provide 2x blocking at upper cabinet locations.
13. 48" clear space adjacent to range or cook-top including handle.
14. LOWER SHELVING: Kitchens require lower shelving and/or drawer spaces to be provided at a height of not more than 48 inches above the floor, per sec. 1133A.5

BATHROOM
(Owner many substitute with approval from TECHNE)

15. SHOWER HEAD and MIXER - KOHLER Stillness Shower Trim Set
16. SHOWER HEAD, MIXER and DIVERTER - KOHLER Stillness Shower Trim Set and Diverter
17. ADA HAND HELD SHOWER - KOHLER Stillness Handshower kit K-9059
18. TOILET and SEAT - TOTO Aquia® Close Coupled Toilet and seat
19. ADA TOILET and SEAT - TOTO Drake® II 1G™
20. BATHROOM FAUCET - KOHLER Stillness K-942-4 faucet
21. SINGLE HOLE FAUCET - HANSGROHE Metric S 31060001 faucet
22. UNDERMOUNT SINK - TOTO LT191(G) Undermount lavatory
23. ADA FREESTANDING SINK - KOHLER Reve K-5027
24. BATHTUB - KOHLER K-1946-LA
25. ADA SHOWER TYPE 1 - 30" x 60" clear space. See interior elevations.
26. ADA SHOWER TYPE 2 - 48" X 42" clear space. See interior elevations.
27. NOT USED
28. NOT USED
29. ADA TOILET FLOOR SPACE: 48"W X 36"D min. clear per CBC sec. 1134A.7.
30. ADA BATHTUB FLOOR SPACE: 30"W X 48"L min.clear per CBC sec. 1134A.5
31. ADA SHOWER FLOOR SPACE: 30"W X 48"L min. clear at alternative roll-in shower per CBC sec. 1134A.6 & fig. 11A-9K. (Or 30"W X 42"L for alternate rollin-in shower)
32. ADA LAVATORY FLOOR SPACE: 30"W X 48"L min. clear per CBC sec. 1134A.8. Base cabinets directly under sink shall be removable to provide clearance for wheelchair. Provide cabinet sides and extend finished flooring under cabinets to rear wall. Max. height of fixture rim to be 34".
33. TOILET REAR/SIDE WALL GRAB BAR & REINFORCEMENT: Toilet grab bar for accessible bathrooms shall be Bobrick B68137 36" x 54". Provide 2X backing at rear wall 32" to 38" A.F.F.. Extend 40" min. in length behind water closet and 26" min. in front of water closet (6" Min. in height. - Must support 250 lbs. min.), per CBC sec. 1134.7.2. When not adjacent to side wall, provide reinforcement for installation of floor-mounted, fold away or similar alternative grab bar.
34. BATHTUB BACK WALL GRAB BAR REINFORCEMENT: Provide 2x backing at the back wall 6" max. above the bathtub rim, extending to 38" min. in height A.F.F.. Extend horizontally 48" in length, with each end 6" max. from each end wall. (6" min. in height. - must support 250 lbs. min.), per CBC sec. 1134.5.2
35. BATHTUB END WALL GRAB BAR REINFORCEMENT: Provide 2x backing at each end wall 32" to 38" A.F.F. starting at the front face of tub and extending 24" min. toward back wall. (6" min. in ht. - must support 250 lbs. min.), per CBC sec. 1134A.5.2.
36. SHOWER WALL GRAB BAR & REINFORCEMENT: Provide continuous 2x backing at all walls 32" to 38" a.f.f. (6" min. in ht. - must support 250 lbs. min.), per CBC sec. 1134A.6.4. When walls are glass, provide reinforcement for installation of floor-mounted or ceiling-mounted grab bars.
37. BATHROOM COUNTERTOP: Height at 34" A.F.F. Owner to select material.

CLOSET

38. Shelf and pole per owner (U.N.O.)

LINEN

39. Per owner (U.N.O.)

MECHANICAL

40. Typical water heater per MEP
41. Furnace per MEP
42. Main electrical panel per MEP

DOOR

43. PULL SIDE AND PUSH SIDE FRONT APPROACH DOOR CLEARANCE: Per CBC sec. 1126A & fig. 11A-8A.
44. HINGE SIDE PULL SIDE AND PUSH SIDE APPROACH DOOR CLEARANCE: Per CBC sec. 1126A & fig. 11A-8B.
45. LATCH SIDE PULL SIDE AND PUSH SIDE APPROACH DOOR CLEARANCE: Per CBC sec. 1126A & fig. 11A-8C.
46. LATCH SIDE APPROACH POCKET DOOR CLEARANCE: Per CBC sec. 1126A & fig. 11A-8F.
47. ACCESSIBLE DOOR THRESHOLD: Per CBC sec. 1132A.4.

GENERAL REQUIREMENTS

48. LINE OF SOFFIT ABOVE
49. GUARDRAIL OR SHORT WALL AT 42" A.F.F. (U.N.O.)

FLOOR PLAN LEGEND

EXTERIOR WALL: 2X4 wood stud @ 16" O.C. with 1 layer of ⅝" gypsum board inside, ⅞" sheathing +⅞" stucco on outside.

EXTERIOR WALL: 2X6 wood stud @ 16" O.C. with 1 layer of ⅝" gypsum board inside, ⅞" sheathing +⅞" stucco on outside.

INTERIOR WALL: 2X4 wood stud @ 16" O.C. with 1 layer of ⅝" gypsum board on each side.

INTERIOR WALL: 2X6 wood stud @ 16" O.C. with 1 layer of ⅝" gypsum board on each side.

1 HOUR FIRE RATED WALL: 2X4 wood stud @ 16" O.C. with 1 layer of ⅝" gypsum board on inside and ⅞" cement plaster on outside. Per CBC 2013 Table 721.1(2) Item Number 15-1.3

WALL OPENING: 80" high u.n.o. Finished with ⅝" gypsum board with square corners.

3⅝" U.N.O.

DOOR AND SYMBOL. See door schedule for complete information

WINDOW AND SYMBOL. See window schedule for complete information

1

FIELD COPY

TECHNE
DESIGN | DEVELOPMENT
3956 30th Street, San Diego, CA 92104
techne-us.com sustainablearchitect.org
o 619-940-5814 m 313-595-5814

CONSULTANTS

LICENSED ARCHITECT
MICHAEL RENE MORTON
C-19371
REN. 04/30/2015
STATE OF CALIFORNIA

414 29th Avenue
Oakland, CA 94601

OWNER

29th Avenue Group, LLC
1211 Embarcadero Way, Suite D
Oakland, CA 94606

BuildZig
Dream it. Build it. Zig it.

APPROVED
2
CHECKED

MARK	DATE	DESCRIPTION
01	11.10.14	1st Building Permit Submittal
02	02.23.15	2nd Building Permit Submittal

2/24/2015 1:44:07 PM

PROJECT NO: 1410
CAD DWG FILE: A118 - UNIT PLANS - PROPOSED.DWG
DRAWN BY: A.S., M.M., J.C., J.S.
CHK'D BY: A.S., M.M

COPYRIGHT: TECHNE expressly reserves its common law copyright and other property rights in this document. This document shall not be reproduced, copied, changed or disclosed in any form or manner whatsoever without first obtaining the express written consent of TECHNE

SHEET TITLE
UNIT PLANS - PROPOSED - 5 & 6

A118
SHEET -- OF 100

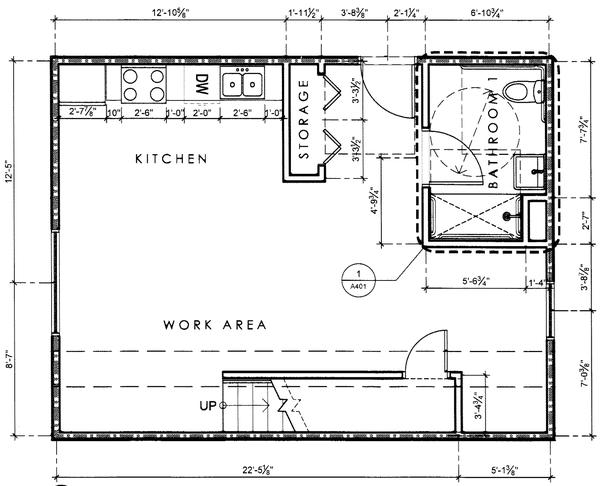

1 LOWER FLOOR PLAN - UNIT 7
SCALE: 1/4" = 1'-0"

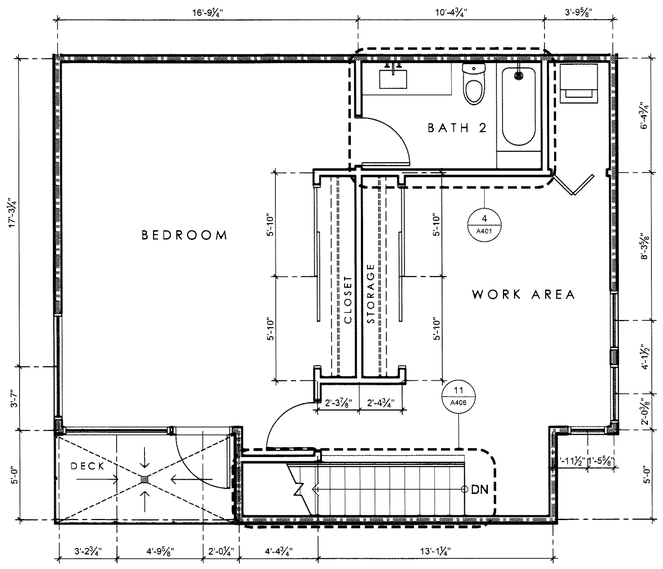

2 UPPER FLOOR PLAN - UNIT 7
SCALE: 1/4" = 1'-0"

FLOOR PLAN KEYNOTES

ENTRY

1. Every unit shall be provided with a door buzzer, bell, chime or equivalent (CBC 11B2A)
2. Entry door unit signage per detail

KITCHEN REQUIREMENTS

3. 24" OR 30" KITCHEN SINK WITH GARBAGE DISPOSAL: Owner to select. Kitchen counter top height at 36" A.F.F. (U.N.O.)
4. 30" REFRIGERATOR: Owner to select
5. 24" DISHWASHER: Owner to select
6. 24" OR 30" RANGE: Owner to select
7. STACKABLE WASHER AND DRYER: Owner to select
8. KITCHEN SINK BASE CABINET: Base cabinets directly under sink shall be removable to provide clearance for wheelchair. provide cabinet sides and extend finished flooring under cabinets to rear wall per CBC sec. 1134A.3.
9. KITCHEN SPACE: Clear width per CBC sec. 1133A.2.1.
10. WORK SPACE: 30" wide kitchen work surface per CBC sec. 1133A.4.
11. REPOSITIONABLE COUNTERTOP: Area designated to meet requirement of 5% of units to provide repositionable kitchen countertop height (to 28" min.) at sink and work space, per CBC sec. 1133A.4.1. Base cabinets directly under sink shall be removable to provide clearance for wheelchair. provide durable, non-absorbent cabinet sides and extend finished flooring under cabinets to rear wall.
12. UPPER CABINETS: Owner to select. Provide 2x blocking at upper cabinet locations.
13. 48" clear space adjacent to range or cook-top including handle.
14. LOWER SHELVING: Kitchens require lower shelving and/or drawer spaces to be provided at a height of not more than 48 inches above the floor, per sec. 1133A.5

BATHROOM

(Owner many substitute with approval from TECHNE)

15.	SHOWER HEAD and MIXER	- KOHLER Stillness Shower Trim Set
16.	SHOWER HEAD, MIXER and DIVERTER	- KOHLER Stillness Shower Trim Set and Diverter
17.	ADA HAND HELD SHOWER	- KOHLER Stilness Handshower kit K-9059
18.	TOILET and SEAT	- TOTO Aquia® Close Coupled Toilet and seat
19.	ADA TOILET and SEAT	- TOTO Drake® II 1G™
20.	BATHROOM FAUCET	- KOHLER Stillness K-942-4 faucet
21.	SINGLE HOLE FAUCET	- HANSGROHE Metric S 31060001 faucet
22.	UNDERMOUNT SINK	- TOTO LT191(G) Undermount lavatory
23.	ADA FREESTANDING SINK	- KOHLER Reve K-5027
24.	BATHTUB	- KOHLER K-1946-LA
25.	ADA SHOWER TYPE 1	- 30" x 60" clear space. See interior elevations.
26.	ADA SHOWER TYPE 2	- 48" X 42" clear space. See interior elevations.

27. NOT USED
28. NOT USED
29. ADA TOILET FLOOR SPACE: 48"W X 36"D min. clear per CBC sec. 1134A.7.
30. ADA BATHTUB FLOOR SPACE: 30"W X 48"L min.clear per CBC sec. 1134A.5
31. ADA SHOWER FLOOR SPACE: 30"W X 48"L min. clear at alternative roll-in shower per CBC sec. 1134A.6 & fig. 11A-9K. (Or 30"W X 42"L for alternate rollin-in shower)
32. ADA LAVATORY FLOOR SPACE: 30"W X 48"L min. clear per CBC sec. 1134A.8. Base cabinets directly under sink shall be removable to provide clearance for wheelchair. Provide cabinet sides and extend finished flooring under cabinets to rear wall. Max. height of fixture rim to be 34".
33. TOILET REAR/SIDE WALL GRAB BAR & REINFORCEMENT: Toilet grab bar for accessible bathrooms shall be Bobrick B68137 36" x 54". Provide 2X backing at rear wall 32" to 38" A.F.F.. Extend 40" min. in length behind water closet and 26" min. in front of water closet (6" Min. in height. - Must support 250 lbs. min.), per CBC sec. 1134.7.2. When not adjacent to side wall, provide reinforcement for installation of floor-mounted, fold away or similar alternative grab bar.
34. BATHTUB BACK WALL GRAB BAR REINFORCEMENT: Provide 2x backing at the back wall 6" max. above the bathtub rim, extending to 38" min. in height A.F.F.. Extend horizontally 48" in length, with each end 6" max. from each end wall. (6" min. in height. - must support 250 lbs. min.), per CBC sec. 1134.5.2
35. BATHTUB END WALL GRAB BAR REINFORCEMENT: Provide 2x backing at each end wall 32" to 38" A.F.F. starting at the front face of tub and extending 24" min. toward back wall. (6" min. in ht. - must support 250 lbs. min.), per CBC sec. 1134A.5.2.
36. SHOWER WALL GRAB BAR & REINFORCEMENT: Provide continuous 2x backing at all walls 32" to 38" a.f.f. (6" min. in ht. - must support 250 lbs. min.), per CBC sec. 1134A.6.4. When walls are glass, provide reinforcement for installation of floor-mounted or ceiling-mounted grab bars.
37. BATHROOM COUNTERTOP: Height at 34" A.F.F. Owner to select material.

CLOSET

38. Shelf and pole per owner (U.N.O.)

LINEN

39. Per owner (U.N.O.)

MECHANICAL

40. Typical water heater per MEP
41. Furnace per MEP
42. Main electrical panel per MEP

DOOR

43. PULL SIDE AND PUSH SIDE FRONT APPROACH DOOR CLEARANCE: Per CBC sec. 1126A & fig. 11A-8A.
44. HINGE SIDE PULL SIDE AND PUSH SIDE APPROACH DOOR CLEARANCE: Per CBC sec. 1126A & fig. 11A-8B.
45. LATCH SIDE PULL SIDE AND PUSH SIDE APPROACH DOOR CLEARANCE: Per CBC sec. 1126A & fig. 11A-8C.
46. LATCH SIDE APPROACH POCKET DOOR CLEARANCE: Per CBC sec. 1126A & fig. 11A-8F.
47. ACCESSIBLE DOOR THRESHOLD: Per CBC sec. 1132A.4.

GENERAL REQUIREMENTS

48. LINE OF SOFFIT ABOVE
49. GUARDRAIL OR SHORT WALL AT 42" A.F.F. (U.N.O.)

FLOOR PLAN NOTES

A. The General Contractor or Sub-Contractor shall verify all conditions or dimensions on these plans in the field with actual site conditions.
B. Written dimensions shall take precedence over scaled dimensions and shall be verified on the job site. On-site verification of all dimensions and conditions shall be the sole responsibility of the General Contractor and Sub-Contractors.
C. The Contractor or sub-contractor shall notify TECHNE if any conflicts or discrepancy occurs between this information on this plan and actual field conditions.
D. Any discrepancies with this drawing affecting project layout shall be brought to the attention of TECHNE. Do not proceed with work until written or verbal instructions are issued by TECHNE.
E. INSULATION: R-13 Batt Insulation at all Exterior 2 X 4 Walls.
R-13 Batt Insulation at all accessible interior walls for sound control.
R-30 Batt Insulation at 2 X 10 Ceiling, Raised Floor & Roof Areas.
R-4.5 Insulation Wrap on all New Hot Water Piping.
R-4.5 Insulation Wrap on all New Supply Ducts.
F. SMOKE DETECTORS: Shall be installed in each bedroom, in access points to each sleeping area and in each story and basements. Detector shall have an alarm audible in all sleeping areas of the unit. Smoke alarms are required to be interconnected in such a manner that the activation of an alarm will activate all the alarms in the individual unit. Units shall be permanently wired to the building wiring and equipped with battery backup.
G. SHOWER COMPARTMENTS: Shower compartments and bathtubs with installed shower heads shall be finished with a nonabsorbent surface that extends to a height of not less than 6 feet above the floor. *CRC R307.2*

DIMENSIONS

- EXTERIOR WALL DIMENSIONS TO FACE OF FINISH (U.N.O.)
- INTERIOR WALL DIMENSIONS TO CENTER LINE OF STUD (U.N.O.)
- CLEARANCE DIMENSIONS ARE TO FACE OF FINISH MATERIALS, NOTED WITH CLR.

FLOOR PLAN LEGEND

EXTERIOR WALL: 2X4 wood stud @ 16" O.C. with 1 layer of ⅝" gypsum board inside, ⅞" sheathing +⅞" stucco on outside.

EXTERIOR WALL: 2X6 wood stud @ 16" O.C. with 1 layer of ⅝" gypsum board inside, ⅞" sheathing +⅞" stucco on outside.

INTERIOR WALL: 2X4 wood stud @ 16" O.C. with 1 layer of ⅝" gypsum board on each side.

INTERIOR WALL: 2X6 wood stud @ 16" O.C. with 1 layer of ⅝" gypsum board on each side.

1 HOUR FIRE RATED WALL: 2X4 wood stud @ 16" O.C. with 1 layer of ⅝" gypsum board on inside and ⅞" cement plaster on outside. Per CBC 2013 Table 721.1(2) Item Number 15-1.3

WALL OPENING: 80" high u.n.o. Finished with ⅝" gypsum board with square corners.

3½" U.N.O.

DOOR AND SYMBOL. See door schedule for complete information

WINDOW AND SYMBOL. See window schedule for complete information

1

FIELD COPY

TECHNE
DESIGN | DEVELOPMENT
3956 30th Street, San Diego, CA 92104
techne-us.com sustainablearchitect.org
o 619-940-5814 m 313-595-5814

CONSULTANTS

LICENSED ARCHITECT
MICHAEL RENE MORTON
C-19371
REN. 04/30/2015
STATE OF CALIFORNIA

414 29th Avenue
Oakland, CA 94601

OWNER

29th Avenue Group, LLC
1211 Embarcadero Way, Suite D
Oakland, CA 94606

BuildZig
Dream it. Build it. Zig it.

APPROVED

MARK	DATE	DESCRIPTION
01	11.10.14	1st Building Permit Submittal
02	02.23.15	2nd Building Permit Submittal

02/24/2015 1:44:07 PM

PROJECT NO: 1410
CAD DWG FILE: A118 - UNIT PLANS - PROPOSED.DWG
DRAWN BY: A.S, M.M., J.C., J.S.
CHK'D BY: A.S., M.M

COPYRIGHT: TECHNE expressly reserves its common law copyright and other property rights in this document. This document shall not be reproduced, copied, changed or disclosed in any form or manner whatsoever without first obtaining the express written consent of TECHNE.

SHEET TITLE
UNIT PLANS - PROPOSED - 7

A119
SHEET -- OF 100

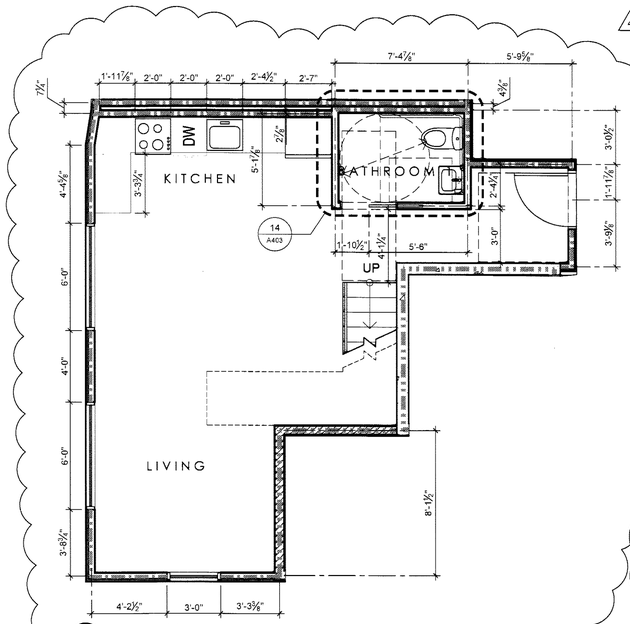

1 LOWER FLOOR PLAN - UNIT 8
SCALE: 1/4" = 1'-0"

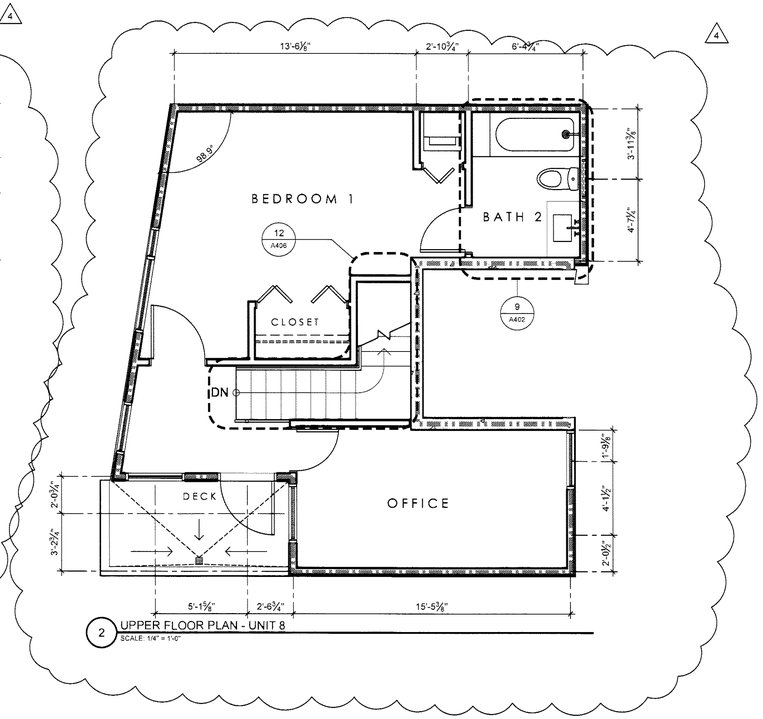

2 UPPER FLOOR PLAN - UNIT 8
SCALE: 1/4" = 1'-0"

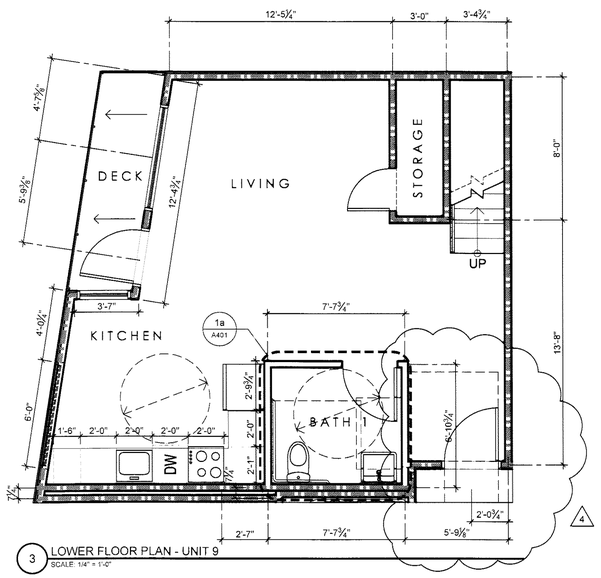

3 LOWER FLOOR PLAN - UNIT 9
SCALE: 1/4" = 1'-0"

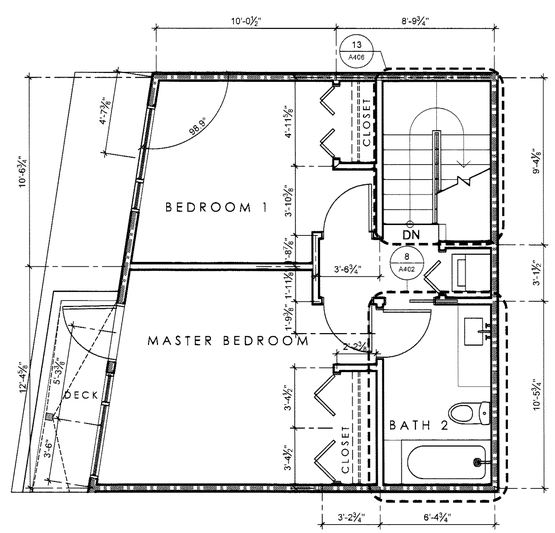

4 UPPER FLOOR PLAN - UNIT 9
SCALE: 1/4" = 1'-0"

FLOOR PLAN NOTES

A. The General Contractor or Sub-Contractor shall verify all conditions or dimensions on these plans in the field with actual site conditions.
B. Written dimensions shall take precedence over scaled dimensions and shall be verified on the job site. On-site verification of all dimensions and conditions shall be the sole responsibility of the General Contractor and Sub-Contractors.
C. The Contractor or sub-contractor shall notify TECHNE if any conflicts or discrepancy occurs between this information on this plan and actual field conditions.
D. Any discrepancies with this drawing affecting project layout shall be brought to the attention of TECHNE. Do not proceed with work until written or verbal instructions are issued by TECHNE.
E. INSULATION: R-13 Batt Insulation at all Exterior 2 X 4 Walls.
R-13 Batt Insulation at all accessible interior walls for sound control.
R-30 Batt Insulation at 2 X 10 Ceiling, Raised Floor & Roof Areas.
R-4.5 Insulation Wrap on all New Hot Water Piping.
R-4.5 Insulation Wrap on all New Supply Ducts.
F. SMOKE DETECTORS: Shall be installed in each bedroom, in access points to each sleeping area and in each story and basements. Detector shall have an alarm audible in all sleeping areas of the unit. Smoke alarms are required to be interconnected in such a manner that the activation of an alarm will activate all the alarms in the individual unit. Units shall be permanently wired to the building wiring and equipped with battery backup.
G. SHOWER COMPARTMENTS: Shower compartments and bathtubs with installed shower heads shall be finished with a nonabsorbent surface that extends to a height of not less than 6 feet above the floor. *CRC R307.2*

DIMENSIONS

- EXTERIOR WALL DIMENSIONS TO FACE OF FINISH (U.N.O.)
- INTERIOR WALL DIMENSIONS TO CENTER LINE OF STUD (U.N.O.)
- CLEARANCE DIMENSIONS ARE TO FACE OF FINISH MATERIALS, NOTED WITH CLR.

FLOOR PLAN KEYNOTES

ENTRY

1. Every unit shall be provided with a door buzzer, bell, chime or equivalent (CBC 11B2A)
2. Entry door unit signage per detail

KITCHEN REQUIREMENTS

3. 24" OR 30" KITCHEN SINK WITH GARBAGE DISPOSAL: Owner to select. Kitchen counter top height at 36" A.F.F. (U.N.O.)
4. 30" REFRIGERATOR: Owner to select
5. 24" DISHWASHER: Owner to select
6. 24" OR 30" RANGE: Owner to select
7. STACKABLE WASHER AND DRYER: Owner to select
8. KITCHEN SINK BASE CABINET: Base cabinets directly under sink shall be removable to provide clearance for wheelchair. provide cabinet sides and extend finished flooring under cabinets to rear wall per CBC sec. 1134A.3.
9. KITCHEN SPACE: Clear width per CBC sec. 1133A.2.1.
10. WORK SPACE: 30" wide kitchen work surface per CBC sec. 1133A.4.
11. REPOSITIONABLE COUNTERTOP: Area designated to meet requirement of 5% of units to provide repositionable kitchen countertop height (to 28" min.) at sink and work space, per CBC sec. 1133A.4.1. Base cabinets directly under sink shall be removable to provide clearance for wheelchair. provide durable, non-absorbent cabinet sides and extend finished flooring under cabinets to rear wall.
12. UPPER CABINETS: Owner to select. Provide 2x blocking at upper cabinet locations.
13. 48" clear space adjacent to range or cook-top including handle.
14. LOWER SHELVING: Kitchens require lower shelving and/or drawer spaces to be provided at a height of not more than 48 inches above the floor, per sec. 1133A.5

BATHROOM
(Owner many substitute with approval from TECHNE)

15. SHOWER HEAD and MIXER - KOHLER Stillness Shower Trim Set
16. SHOWER HEAD, MIXER and DIVERTER - KOHLER Stillness Shower Trim Set and Diverter
17. ADA HAND HELD SHOWER - KOHLER Stilness Handshower kit K-9059
18. TOILET and SEAT - TOTO Aquia® Close Coupled Toilet and seat
19. ADA TOILET and SEAT - TOTO Drake® II 1G™
20. BATHROOM FAUCET - KOHLER Stillness K-942-4 faucet
21. SINGLE HOLE FAUCET - HANSGROHE Metric S 31060001 faucet
22. UNDERMOUNT SINK - TOTO LT191(G) Undermount lavatory
23. ADA FREESTANDING SINK - KOHLER Reve K-5027
24. BATHTUB - KOHLER K-1946-LA
25. ADA SHOWER TYPE 1 - 30" x 60" clear space. See interior elevations.
26. ADA SHOWER TYPE 2 - 48" X 42" clear space. See interior elevations.
27. NOT USED
28. NOT USED
29. ADA TOILET FLOOR SPACE: 48"W X 36"D min. clear per CBC sec. 1134A.7.
30. ADA BATHTUB FLOOR SPACE: 30"W X 48"L min.clear per CBC sec. 1134A.5
31. ADA SHOWER FLOOR SPACE: 30"W X 48"L min. clear at alternative roll-in shower per CBC sec. 1134A.6 & fig. 11A-9K. (Or 30"W X 42"L for alternate rollin-in shower)
32. ADA LAVATORY FLOOR SPACE: 30"W X 48"L min. clear per CBC sec. 1134A.8. Base cabinets directly under sink shall be removable to provide clearance for wheelchair. Provide cabinet sides and extend finished flooring under cabinets to rear wall. Max. height of fixture rim to be 34".
33. TOILET REAR/SIDE WALL GRAB BAR & REINFORCEMENT: Toilet grab bar for accessible bathrooms shall be Bobrick B68137 36" x 54". Provide 2X backing at rear wall 32" to 38" A.F.F.. Extend 40" min. in length behind water closet and 26" min. in front of water closet (6" Min. in height. - Must support 250 lbs. min.), per CBC sec. 1134.7.2. When not adjacent to side wall, provide reinforcement for installation of floor-mounted, fold away or similar alternative grab bar.
34. BATHTUB BACK WALL GRAB BAR REINFORCEMENT: Provide 2x backing at the back wall 6" max. above the bathtub rim, extending to 38" min. in height A.F.F.. Extend horizontally 48" in length, with each end 6" max. from each end wall. (6" min. in height. - must support 250 lbs. min.), per CBC sec. 1134.5.2
35. BATHTUB END WALL GRAB BAR REINFORCEMENT: Provide 2x backing at each end wall 32" to 38" A.F.F. starting at the front face of tub and extending 24" min. toward back wall. (6" min. in ht. - must support 250 lbs. min.), per CBC sec. 1134A.5.2.
36. SHOWER WALL GRAB BAR & REINFORCEMENT: Provide continuous 2x backing at all walls 32" to 38" a.f.f. (6" min. in ht. - must support 250 lbs. min.), per CBC sec. 1134A.6.4. When walls are glass, provide reinforcement for installation of floor-mounted or ceiling-mounted grab bars.
37. BATHROOM COUNTERTOP: Height at 34" A.F.F. Owner to select material.

CLOSET

38. Shelf and pole per owner (U.N.O.)

LINEN

39. Per owner (U.N.O.)

MECHANICAL

40. Typical water heater per MEP
41. Furnace per MEP
42. Main electrical panel per MEP

DOOR

43. PULL SIDE AND PUSH SIDE FRONT APPROACH DOOR CLEARANCE: Per CBC sec. 1126A & fig. 11A-8A.
44. HINGE SIDE PULL SIDE AND PUSH SIDE APPROACH DOOR CLEARANCE: Per CBC sec. 1126A & fig. 11A-8B.
45. LATCH SIDE PULL SIDE AND PUSH SIDE APPROACH DOOR CLEARANCE: Per CBC sec. 1126A & fig. 11A-8C.
46. LATCH SIDE APPROACH POCKET DOOR CLEARANCE: Per CBC sec. 1126A & fig. 11A-8F.
47. ACCESSIBLE DOOR THRESHOLD: Per CBC sec. 1132A.4.

GENERAL REQUIREMENTS

48. LINE OF SOFFIT ABOVE
49. GUARDRAIL OR SHORT WALL AT 42" A.F.F. (U.N.O.)

FLOOR PLAN LEGEND

EXTERIOR WALL: 2X4 wood stud @ 16" O.C. with 1 layer of ⅝" gypsum board inside, ⅝" sheathing +⅞" stucco on outside.

EXTERIOR WALL: 2X6 wood stud @ 16" O.C. with 1 layer of ⅝" gypsum board inside, ⅝" sheathing +⅞" stucco on outside.

INTERIOR WALL: 2X4 wood stud @ 16" O.C. with 1 layer of ⅝" gypsum board on each side.

INTERIOR WALL: 2X6 wood stud @ 16" O.C. with 1 layer of ⅝" gypsum board on each side.

1 HOUR FIRE RATED WALL: 2X4 wood stud @ 16" O.C. with 1 layer of ⅝" gypsum board on inside and ⅞" cement plaster on outside. Per CBC 2013 Table 721.1(2) Item Number 15-1.3

WALL OPENING: 80" high u.n.o. Finished with ⅝" gypsum board with square corners.

3⅛" U.N.O.

DOOR AND SYMBOL. See door schedule for complete information

WINDOW AND SYMBOL. See window schedule for complete information

FIELD COPY

TECHNE
DESIGN | DEVELOPMENT
3956 30th Street, San Diego, CA 92104
techne-us.com sustainablearchitect.org
o 619-940-5814 m 313-595-5814

CONSULTANTS

LICENSED ARCHITECT
MICHAEL REEVE MORTON
C-19371
REN. 04/30/2015
STATE OF CALIFORNIA

414 29th Avenue
Oakland, CA 94601

OWNER

29th Avenue Group, LLC
1211 Embarcadero Way, Suite D
Oakland, CA 94606

BuildZig
Dream it. Build it. Zig it.

MARK	DATE	DESCRIPTION
D1	11.10.14	1st Building Permit Submittal
D2	02.23.15	2nd Building Permit Submittal
D3	03.13.15	3rd Building Permit Submittal
D4	04.02.15	Elevator Revision

4/1/2015 5:30:26 PM

PROJECT NO: 1410
CAD DWG FILE: A116 - UNIT PLANS - PROPOSED.DWG
DRAWN BY: A.S, M.M., J.C., J.S.
CHK'D BY: A.S., M.M

COPYRIGHT: TECHNE expressly reserves its common law copyright and other property rights in this document. This document shall not be reproduced, copied, changed or disclosed in any form or manner whatsoever without first obtaining the express written consent of TECHNE.

SHEET TITLE
UNIT PLANS - PROPOSED - 8 & 9

A120
SHEET -- OF 100

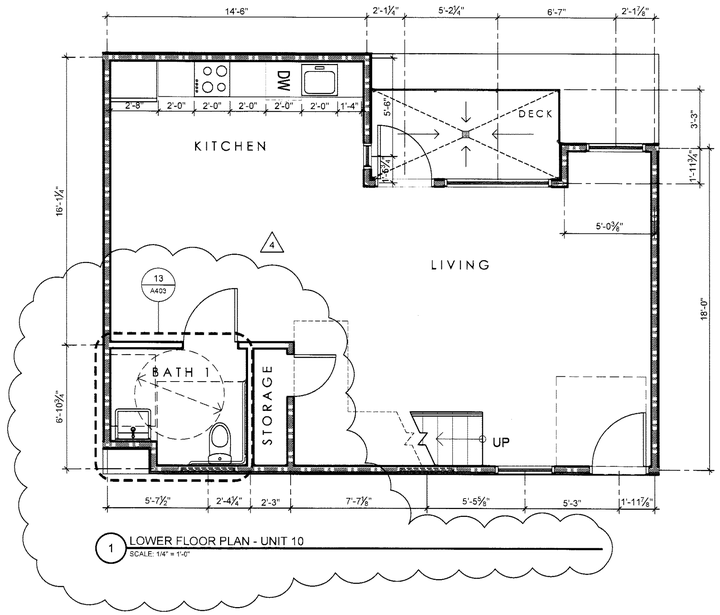

1 LOWER FLOOR PLAN - UNIT 10
SCALE: 1/4" = 1'-0"

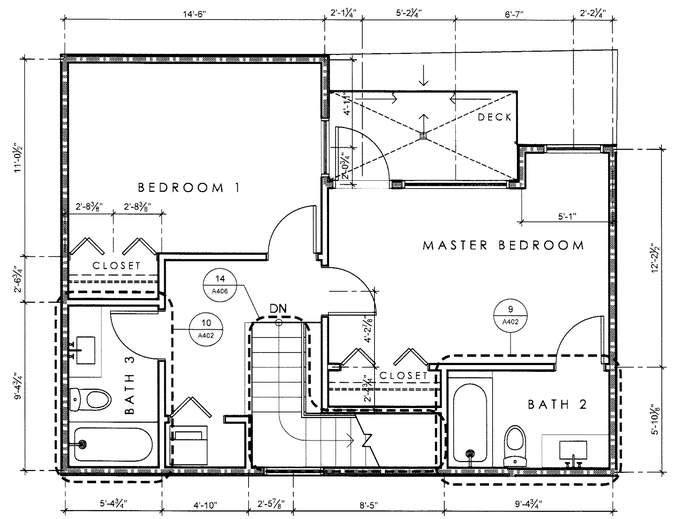

2 UPPER FLOOR PLAN - UNIT 10
SCALE: 1/4" = 1'-0"

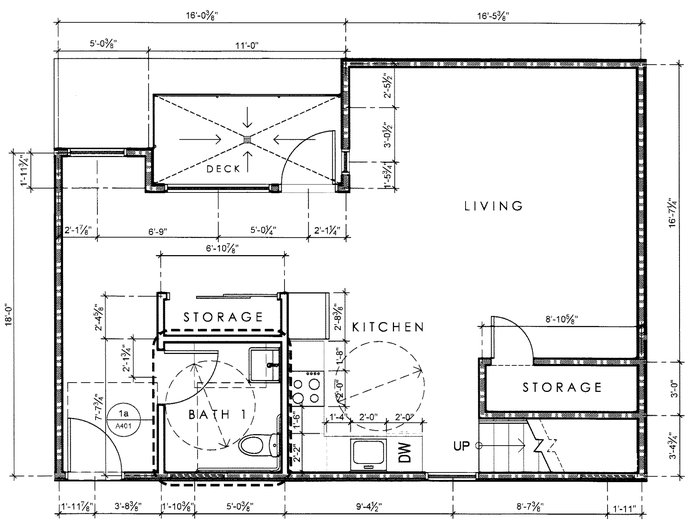

3 LOWER FLOOR PLAN - UNIT 11
SCALE: 1/4" = 1'-0"

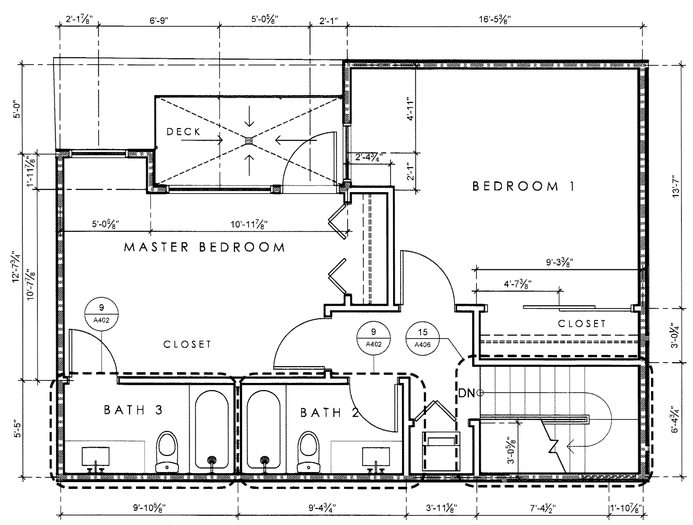

4 UPPER FLOOR PLAN - UNIT 11
SCALE: 1/4" = 1'-0"

FLOOR PLAN KEYNOTES

ENTRY

1. Every unit shall be provided with a door buzzer, bell, chime or equivalent (CBC 11B2A)
2. Entry door unit signage per detail

KITCHEN REQUIREMENTS

3. 24" OR 30" KITCHEN SINK WITH GARBAGE DISPOSAL: Owner to select. Kitchen counter top height at 36" A.F.F. (U.N.O.)
4. 30" REFRIGERATOR: Owner to select
5. 24" DISHWASHER: Owner to select
6. 24" OR 30" RANGE: Owner to select
7. STACKABLE WASHER AND DRYER: Owner to select
8. KITCHEN SINK BASE CABINET: Base cabinets directly under sink shall be removable to provide clearance for wheelchair. provide cabinet sides and extend finished flooring under cabinets to rear wall per CBC sec. 1134A.3.
9. KITCHEN SPACE: Clear width per CBC sec. 1133A.2.1.
10. WORK SPACE: 30" wide kitchen work surface per CBC sec. 1133A.4.
11. REPOSITIONABLE COUNTERTOP: Area designated to meet requirement of 5% of units to provide repositionable kitchen countertop height (to 28" min.) at sink and work space, per CBC sec. 1133A.4.1. Base cabinets directly under sink shall be removable to provide clearance for wheelchair. provide durable, non-absorbent cabinet sides and extend finished flooring under cabinets to rear wall.
12. UPPER CABINETS: Owner to select. Provide 2x blocking at upper cabinet locations.
13. 48" clear space adjacent to range or cook-top including handle.
14. LOWER SHELVING: Kitchens require lower shelving and/or drawer spaces to be provided at a height of not more than 48 inches above the floor, per sec. 1133A.5

BATHROOM

(Owner many substitute with approval from TECHNE)

15. SHOWER HEAD and MIXER - KOHLER Stillness Shower Trim Set
16. SHOWER HEAD, MIXER and DIVERTER - KOHLER Stillness Shower Trim Set and Diverter
17. ADA HAND HELD SHOWER - KOHLER Stilness Handshower kit K-9059
18. TOILET and SEAT - TOTO Aquia® Close Coupled Toilet and seat
19. ADA TOILET and SEAT - TOTO Drake® II 1G™
20. BATHROOM FAUCET - KOHLER Stillness K-942-4 faucet
21. SINGLE HOLE FAUCET - HANSGROHE Metric S 31060001 faucet
22. UNDERMOUNT SINK - TOTO LT191(G) Undermount lavatory
23. ADA FREESTANDING SINK - KOHLER Reve K-5027
24. BATHTUB - KOHLER K-1946-LA
25. ADA SHOWER TYPE 1 - 30" x 60" clear space. See interior elevations.
26. ADA SHOWER TYPE 2 - 48" X 42" clear space. See interior elevations.
27. NOT USED
28. NOT USED
29. ADA TOILET FLOOR SPACE: 48"W X 36"D min. clear per CBC sec. 1134A.7.
30. ADA BATHTUB FLOOR SPACE: 30"W X 48"L min.clear per CBC sec. 1134A.5
31. ADA SHOWER FLOOR SPACE: 30"W X 48"L min. clear at alternative roll-in shower per CBC sec. 1134A.6 & fig. 11A-9K. (Or 30"W X 42"L for alternate rollin-in shower)
32. ADA LAVATORY FLOOR SPACE: 30"W X 48"L min. clear per CBC sec. 1134A.8. Base cabinets directly under sink shall be removable to provide clearance for wheelchair. Provide cabinet sides and extend finished flooring under cabinets to rear wall. Max. height of fixture rim to be 34".
33. TOILET REAR/SIDE WALL GRAB BAR & REINFORCEMENT: Toilet grab bar for accessible bathrooms shall be Bobrick B68137 36" x 54". Provide 2X backing at rear wall 32" to 38" A.F.F.. Extend 40" min. in length behind water closet and 26" min. in front of water closet (6" Min. in height. - Must support 250 lbs. min.), per CBC sec. 1134.7.2. When not adjacent to side wall, provide reinforcement for installation of floor-mounted, fold away or similar alternative grab bar.
34. BATHTUB BACK WALL GRAB BAR REINFORCEMENT: Provide 2x backing at the back wall 6" max. above the bathtub rim, extending to 38" min. in height A.F.F.. Extend horizontally 48" in length, with each end 6" max. from each end wall. (6" min. in height. - must support 250 lbs. min.), per CBC sec. 1134.5.2
35. BATHTUB END WALL GRAB BAR REINFORCEMENT: Provide 2x backing at each end wall 32" to 38" A.F.F. starting at the front face of tub and extending 24" min. toward back wall. (6" min. in ht. - must support 250 lbs. min.), per CBC sec. 1134A.5.2.
36. SHOWER WALL GRAB BAR & REINFORCEMENT: Provide continuous 2x backing at all walls 32" to 38" a.f.f. (6" min. in ht. - must support 250 lbs. min.), per CBC sec. 1134A.6.4. When walls are glass, provide reinforcement for installation of floor-mounted or ceiling-mounted grab bars.
37. BATHROOM COUNTERTOP: Height at 34" A.F.F. Owner to select material.

CLOSET

38. Shelf and pole per owner (U.N.O.)

LINEN

39. Per owner (U.N.O.)

MECHANICAL

40. Typical water heater per MEP
41. Furnace per MEP
42. Main electrical panel per MEP

DOOR

43. PULL SIDE AND PUSH SIDE FRONT APPROACH DOOR CLEARANCE: Per CBC sec. 1126A & fig. 11A-8A.
44. HINGE SIDE PULL SIDE AND PUSH SIDE APPROACH DOOR CLEARANCE: Per CBC sec. 1126A & fig. 11A-8B.
45. LATCH SIDE PULL SIDE AND PUSH SIDE APPROACH DOOR CLEARANCE: Per CBC sec. 1126A & fig. 11A-8C.
46. LATCH SIDE APPROACH POCKET DOOR CLEARANCE: Per CBC sec. 1126A & fig. 11A-8F.
47. ACCESSIBLE DOOR THRESHOLD: Per CBC sec. 1132A.4.

GENERAL REQUIREMENTS

48. LINE OF SOFFIT ABOVE
49. GUARDRAIL OR SHORT WALL AT 42" A.F.F. (U.N.O.)

FLOOR PLAN LEGEND

EXTERIOR WALL: 2X4 wood stud @ 16" O.C. with 1 layer of ⅝" gypsum board inside, ⅝" sheathing +⅞" stucco on outside.

EXTERIOR WALL: 2X6 wood stud @ 16" O.C. with 1 layer of ⅝" gypsum board inside, ⅝" sheathing +⅞" stucco on outside.

INTERIOR WALL: 2X4 wood stud @ 16" O.C. with 1 layer of ⅝" gypsum board on each side.

INTERIOR WALL: 2X6 wood stud @ 16" O.C. with 1 layer of ⅝" gypsum board on each side.

1 HOUR FIRE RATED WALL: 2X4 wood stud @ 16" O.C. with 1 layer of ⅝" gypsum board on inside and ⅞" cement plaster on outside. Per CBC 2013 Table 721.1(2) Item Number 15-1.3

WALL OPENING: 80" high u.n.o. Finished with ⅝" gypsum board with square corners.

3½" U.N.O.

DOOR AND SYMBOL. See door schedule for complete information

WINDOW AND SYMBOL. See window schedule for complete information

1

FIELD COPY

TECHNE
DESIGN | DEVELOPMENT
3956 30th Street, San Diego, CA 92104
techne-us.com sustainablearchitect.org
o 619-940-5814 m 313-595-5814

CONSULTANTS

LICENSED ARCHITECT
MICHAEL RENE MORTON
C-19371
REN. 04/30/2015
STATE OF CALIFORNIA

414 29th Avenue
Oakland, CA 94601

OWNER

29th Avenue Group, LLC
1211 Embarcadero Way, Suite D
Oakland, CA 94606

BuildZig
Dream it. Build it. Zig it.

APPROVED

MARK	DATE	DESCRIPTION
01	11.10.14	1st Building Permit Submittal
02	02.23.15	2nd Building Permit Submittal
03	03.13.15	3rd Building Permit Submittal
04	04.02.15	Elevator Revision

4/1/2015 5:33:53 PM

PROJECT NO: 1410

CAD DWG FILE: A116 - UNIT PLANS - PROPOSED.DWG

DRAWN BY: A.S., M.M., J.C., J.S.

CHK'D BY: A.S., M.M

COPYRIGHT: TECHNE expressly reserves its common law copyright and other property rights in this document. This document shall not be reproduced, copied, changed or disclosed in any form or manner whatsoever without first obtaining the express written consent of TECHNE.

SHEET TITLE

UNIT PLANS- PROPOSED - 10&11

A121

SHEET -- OF 100

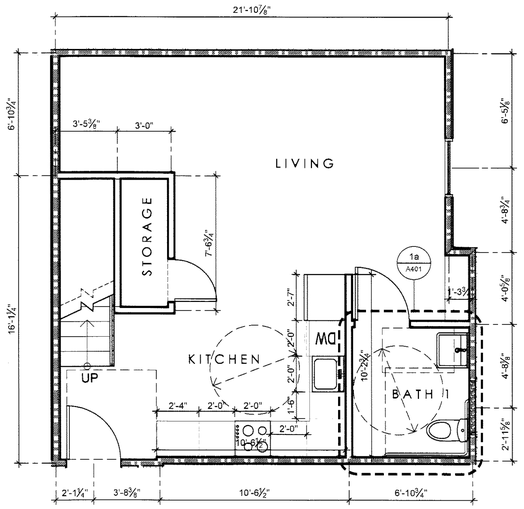

1 LOWER FLOOR PLAN - UNIT 12
SCALE: 1/4" = 1'-0"

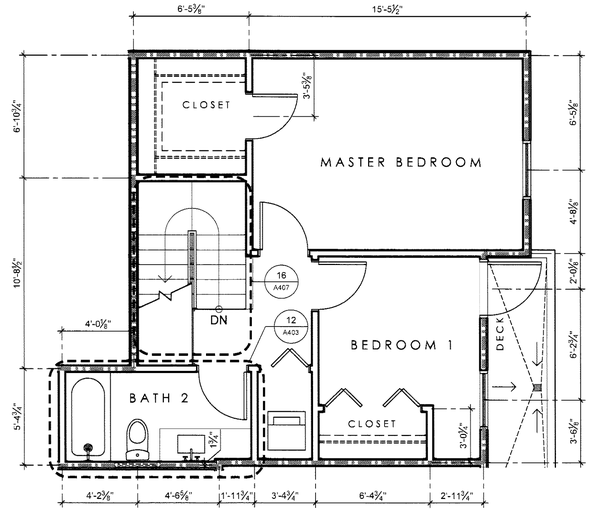

2 UPPER FLOOR PLAN - UNIT 12
SCALE: 1/4" = 1'-0"

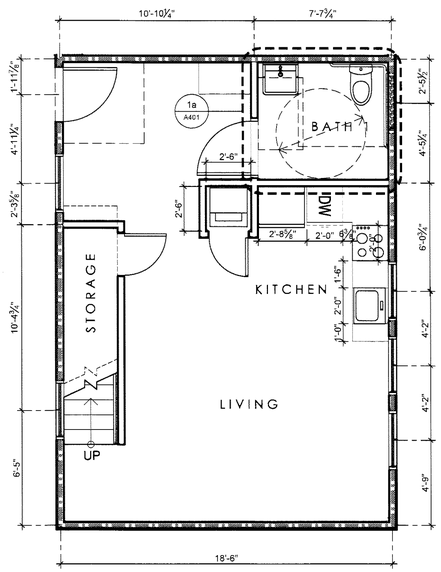

3 LOWER FLOOR PLAN - UNIT 13
SCALE: 1/4" = 1'-0"

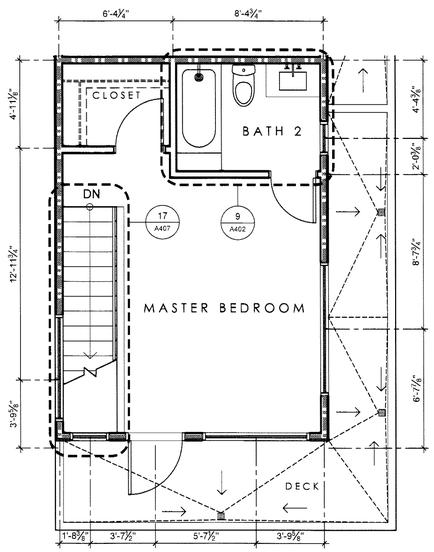

4 UPPER FLOOR PLAN - UNIT 13
SCALE: 1/4" = 1'-0"

FLOOR PLAN NOTES

A. The General Contractor or Sub-Contractor shall verify all conditions or dimensions on these plans in the field with actual site conditions.
B. Written dimensions shall take precedence over scaled dimensions and shall be verified on the job site. On-site verification of all dimensions and conditions shall be the sole responsibility of the General Contractor and Sub-Contractors.
C. The Contractor or sub-contractor shall notify TECHNE if any conflicts or discrepancy occurs between this information on this plan and actual field conditions.
D. Any discrepancies with this drawing affecting project layout shall be brought to the attention of TECHNE. Do not proceed with work until written or verbal instructions are issued by TECHNE.
E. INSULATION: R-13 Batt Insulation at all Exterior 2 X 4 Walls.
R-13 Batt Insulation at all accessible interior walls for sound control.
R-30 Batt Insulation at 2 X 10 Ceiling, Raised Floor & Roof Areas.
R-4.5 Insulation Wrap on all New Hot Water Piping.
R-4.5 Insulation Wrap on all New Supply Ducts.
F. SMOKE DETECTORS: Shall be installed in each bedroom, in access points to each sleeping area and in each story and basements. Detector shall have an alarm audible in all sleeping areas of the unit. Smoke alarms are required to be interconnected in such a manner that the activation of an alarm will activate all the alarms in the individual unit. Units shall be permanently wired to the building wiring and equipped with battery backup.
G. SHOWER COMPARTMENTS: Shower compartments and bathtubs with installed shower heads shall be finished with a nonabsorbent surface that extends to a height of not less than 6 feet above the floor. *CRC R307.2*

DIMENSIONS

- EXTERIOR WALL DIMENSIONS TO FACE OF FINISH (U.N.O.)
- INTERIOR WALL DIMENSIONS TO CENTER LINE OF STUD (U.N.O.)
- CLEARANCE DIMENSIONS ARE TO FACE OF FINISH MATERIALS, NOTED WITH CLR.

FLOOR PLAN KEYNOTES

ENTRY

1. Every unit shall be provided with a door buzzer, bell, chime or equivalent (CBC 1182A)
2. Entry door unit signage per detail

KITCHEN REQUIREMENTS

3. 24" OR 30" KITCHEN SINK WITH GARBAGE DISPOSAL: Owner to select. Kitchen counter top height at 36" A.F.F. (U.N.O.)
4. 30" REFRIGERATOR: Owner to select
5. 24" DISHWASHER: Owner to select
6. 24" OR 30" RANGE: Owner to select
7. STACKABLE WASHER AND DRYER: Owner to select
8. KITCHEN SINK BASE CABINET: Base cabinets directly under sink shall be removable to provide clearance for wheelchair. provide cabinet sides and extend finished flooring under cabinets to rear wall per CBC sec. 1134A.3.
9. KITCHEN SPACE: Clear width per CBC sec. 1133A.2.1.
10. WORK SPACE: 30" wide kitchen work surface per CBC sec. 1133A.4.
11. REPOSITIONABLE COUNTERTOP: Area designated to meet requirement of 5% of units to provide repositionable kitchen countertop height (to 28" min.) at sink and work space, per CBC sec. 1133A.4.1. Base cabinets directly under sink shall be removable to provide clearance for wheelchair. provide durable, non-absorbent cabinet sides and extend finished flooring under cabinets to rear wall.
12. UPPER CABINETS: Owner to select. Provide 2x blocking at upper cabinet locations.
13. 48" clear space adjacent to range or cook-top including handle.
14. LOWER SHELVING: Kitchens require lower shelving and/or drawer spaces to be provided at a height of not more than 48 inches above the floor, per sec. 1133A.5

BATHROOM
(Owner many substitute with approval from TECHNE)

15. SHOWER HEAD and MIXER - KOHLER Stillness Shower Trim Set
16. SHOWER HEAD, MIXER and DIVERTER - KOHLER Stillness Shower Trim Set and Diverter
17. ADA HAND HELD SHOWER - KOHLER Stilness Handshower kit K-9059
18. TOILET and SEAT - TOTO Aquia® Close Coupled Toilet and seat
19. ADA TOILET and SEAT - TOTO Drake® II 1G™
20. BATHROOM FAUCET - KOHLER Stillness K-942-4 faucet
21. SINGLE HOLE FAUCET - HANSGROHE Metric S 31060001 faucet
22. UNDERMOUNT SINK - TOTO LT191(G) Undermount lavatory
23. ADA FREESTANDING SINK - KOHLER Reve K-5027
24. BATHTUB - KOHLER K-1946-LA
25. ADA SHOWER TYPE 1 - 30" x 60" clear space. See interior elevations.
26. ADA SHOWER TYPE 2 - 48" X 42" clear space. See interior elevations.
27. NOT USED
28. NOT USED
29. ADA TOILET FLOOR SPACE: 48"W X 36"D min. clear per CBC sec. 1134A.7.
30. ADA BATHTUB FLOOR SPACE: 30"W X 48"L min.clear per CBC sec. 1134A.5
31. ADA SHOWER FLOOR SPACE: 30"W X 48"L min. clear at alternative roll-in shower per CBC sec. 1134A.6 & fig. 11A-9K. (Or 30"W X 42"L for alternate rollin-in shower)
32. ADA LAVATORY FLOOR SPACE: 30"W X 48"L min. clear per CBC sec. 1134A.8. Base cabinets directly under sink shall be removable to provide clearance for wheelchair. Provide cabinet sides and extend finished flooring under cabinets to rear wall. Max. height of fixture rim to be 34".
33. TOILET REAR/SIDE WALL GRAB BAR & REINFORCEMENT: Toilet grab bar for accessible bathrooms shall be Bobrick B68137 36" x 54". Provide 2X backing at rear wall 32" to 38" A.F.F.. Extend 40" min. in length behind water closet and 26" min. in front of water closet (6" Min. in height. - Must support 250 lbs. min.), per CBC sec. 1134.7.2. When not adjacent to side wall, provide reinforcement for installation of floor-mounted, fold away or similar alternative grab bar.
34. BATHTUB BACK WALL GRAB BAR REINFORCEMENT: Provide 2x backing at the back wall 6" max. above the bathtub rim, extending to 38" min. in height A.F.F.. Extend horizontally 48" in length, with each end 6" max. from each end wall. (6" min. in height. - must support 250 lbs. min.), per CBC sec. 1134.5.2
35. BATHTUB END WALL GRAB BAR REINFORCEMENT: Provide 2x backing at each end wall 32" to 38" A.F.F. starting at the front face of tub and extending 24" min. toward back wall. (6" min. in ht. - must support 250 lbs. min.), per CBC sec. 1134A.5.2.
36. SHOWER WALL GRAB BAR & REINFORCEMENT: Provide continuous 2x backing at all walls 32" to 38" a.f.f. (6" min. in ht. - must support 250 lbs. min.), per CBC sec. 1134A.6.4. When walls are glass, provide reinforcement for installation of floor-mounted or ceiling-mounted grab bars.
37. BATHROOM COUNTERTOP: Height at 34" A.F.F. Owner to select material.

CLOSET

38. Shelf and pole per owner (U.N.O.)

LINEN

39. Per owner (U.N.O.)

MECHANICAL

40. Typical water heater per MEP
41. Furnace per MEP
42. Main electrical panel per MEP

DOOR

43. PULL SIDE AND PUSH SIDE FRONT APPROACH DOOR CLEARANCE: Per CBC sec. 1126A & fig. 11A-8A.
44. HINGE SIDE PULL SIDE AND PUSH SIDE APPROACH DOOR CLEARANCE: Per CBC sec. 1126A & fig. 11A-8B.
45. LATCH SIDE PULL SIDE AND PUSH SIDE APPROACH DOOR CLEARANCE: Per CBC sec. 1126A & fig. 11A-8C.
46. LATCH SIDE APPROACH POCKET DOOR CLEARANCE: Per CBC sec. 1126A & fig. 11A-8F.
47. ACCESSIBLE DOOR THRESHOLD: Per CBC sec. 1132A.4.

GENERAL REQUIREMENTS

48. LINE OF SOFFIT ABOVE
49. GUARDRAIL OR SHORT WALL AT 42" A.F.F. (U.N.O.)

FLOOR PLAN LEGEND

- EXTERIOR WALL: 2X4 wood stud @ 16" O.C. with 1 layer of ⅝" gypsum board inside, ⅝" sheathing +⅞" stucco on outside.
- EXTERIOR WALL: 2X6 wood stud @ 16" O.C. with 1 layer of ⅝" gypsum board inside, ⅝" sheathing +⅞" stucco on outside.
- INTERIOR WALL: 2X4 wood stud @ 16" O.C. with 1 layer of ⅝" gypsum board on each side.
- INTERIOR WALL: 2X6 wood stud @ 16" O.C. with 1 layer of ⅝" gypsum board on each side.
- 1 HOUR FIRE RATED WALL: 2X4 wood stud @ 16" O.C. with 1 layer of ⅝" gypsum board on inside and ⅞" cement plaster on outside. Per CBC 2013 Table 721.1(2) Item Number 15-1.3
- WALL OPENING: 80" high u.n.o. Finished with ⅝" gypsum board with square corners.
- 3½" U.N.O. — DOOR AND SYMBOL. See door schedule for complete information
- 1 — WINDOW AND SYMBOL. See window schedule for complete information

FIELD COPY

TECHNE
DESIGN | DEVELOPMENT
3956 30th Street, San Diego, CA 92104
techne-us.com sustainablearchitect.org
o 619-940-5814 m 313-595-5814

CONSULTANTS

LICENSED ARCHITECT
MICHAEL RENE MORTON
C-19371
REN. 04/30/2015
STATE OF CALIFORNIA

414 29th Avenue
Oakland, CA 94601

OWNER

29th Avenue Group, LLC
1211 Embarcadero Way, Suite D
Oakland, CA 94606

BuildZig
Dream it. Build it. Zig it.

2

MARK	DATE	DESCRIPTION
D1	11.10.14	1st Building Permit Submittal
D2	02.23.15	2nd Building Permit Submittal

5/24/2015 1:44:07 PM

PROJECT NO: 1410
CAD DWG FILE: A116 - UNIT PLANS - PROPOSED.DWG
DRAWN BY: A.S, M.M., J.C., J.S.
CHK'D BY: A.S., M.M

COPYRIGHT: TECHNE expressly reserves its common law copyright and other property rights in this document. This document shall not be reproduced, copied, changed or disclosed in any form or manner whatsoever without first obtaining the express written consent of TECHNE.

SHEET TITLE
UNIT PLANS-
PROPOSED - 12&13

A122
SHEET -- OF 100

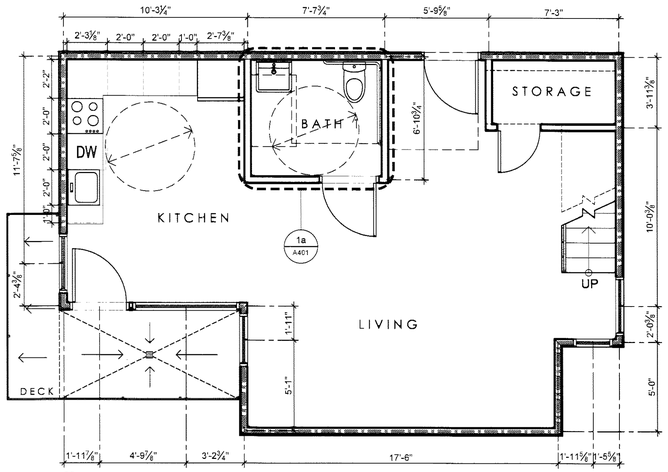

1 LOWER FLOOR PLAN - UNIT 14
SCALE: 1/4" = 1'-0"

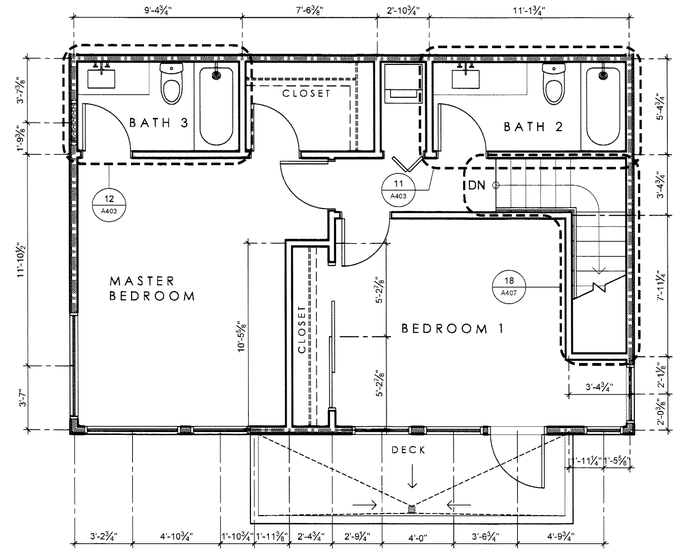

2 UPPER FLOOR PLAN - UNIT 14
SCALE: 1/4" = 1'-0"

FLOOR PLAN NOTES

A. The General Contractor or Sub-Contractor shall verify all conditions or dimensions on these plans in the field with actual site conditions.
B. Written dimensions shall take precedence over scaled dimensions and shall be verified on the job site. On-site verification of all dimensions and conditions shall be the sole responsibility of the General Contractor and Sub-Contractors.
C. The Contractor or sub-contractor shall notify TECHNE if any conflicts or discrepancy occurs between this information on this plan and actual field conditions.
D. Any discrepancies with this drawing affecting project layout shall be brought to the attention of TECHNE. Do not proceed with work until written or verbal instructions are issued by TECHNE.
E. INSULATION: R-13 Batt Insulation at all Exterior 2 X 4 Walls.
R-13 Batt Insulation at all accessible interior walls for sound control.
R-30 Batt Insulation at 2 X 10 Ceiling, Raised Floor & Roof Areas.
R-4.5 Insulation Wrap on all New Hot Water Piping.
R-4.5 Insulation Wrap on all New Supply Ducts.
F. SMOKE DETECTORS: Shall be installed in each bedroom, in access points to each sleeping area and in each story and basements. Detector shall have an alarm audible in all sleeping areas of the unit. Smoke alarms are required to be interconnected in such a manner that the activation of an alarm will activate all the alarms in the individual unit. Units shall be permanently wired to the building wiring and equipped with battery backup.
G. SHOWER COMPARTMENTS: Shower compartments and bathtubs with installed shower heads shall be finished with a nonabsorbent surface that extends to a height of not less than 6 feet above the floor. *CRC R307.2*

DIMENSIONS

- EXTERIOR WALL DIMENSIONS TO FACE OF FINISH (U.N.O.)
- INTERIOR WALL DIMENSIONS TO CENTER LINE OF STUD (U.N.O.)
- CLEARANCE DIMENSIONS ARE TO FACE OF FINISH MATERIALS, NOTED WITH CLR.

FLOOR PLAN KEYNOTES

ENTRY

1. Every unit shall be provided with a door buzzer, bell, chime or equivalent (CBC 1182A)
2. Entry door unit signage per detail

KITCHEN REQUIREMENTS

3. 24" OR 30" KITCHEN SINK WITH GARBAGE DISPOSAL: Owner to select. Kitchen counter top height at 36" A.F.F. (U.N.O.)
4. 30" REFRIGERATOR: Owner to select
5. 24" DISHWASHER: Owner to select
6. 24" OR 30" RANGE: Owner to select
7. STACKABLE WASHER AND DRYER: Owner to select
8. KITCHEN SINK BASE CABINET: Base cabinets directly under sink shall be removable to provide clearance for wheelchair. provide cabinet sides and extend finished flooring under cabinets to rear wall per CBC sec. 1134A.3.
9. KITCHEN SPACE: Clear width per CBC sec. 1133A.2.1.
10. WORK SPACE: 30" wide kitchen work surface per CBC sec. 1133A.4.
11. REPOSITIONABLE COUNTERTOP: Area designated to meet requirement of 5% of units to provide repositionable kitchen countertop height (to 28" min.) at sink and work space, per CBC sec. 1133A.4.1. Base cabinets directly under sink shall be removable to provide clearance for wheelchair. provide durable, non-absorbent cabinet sides and extend finished flooring under cabinets to rear wall.
12. UPPER CABINETS: Owner to select. Provide 2x blocking at upper cabinet locations.
13. 48" clear space adjacent to range or cook-top including handle.
14. LOWER SHELVING: Kitchens require lower shelving and/or drawer spaces to be provided at a height of not more than 48 inches above the floor, per sec. 1133A.5

BATHROOM
(Owner many substitute with approval from TECHNE)

15. SHOWER HEAD and MIXER	- KOHLER Stillness Shower Trim Set
16. SHOWER HEAD, MIXER and DIVERTER	- KOHLER Stillness Shower Trim Set and Diverter
17. ADA HAND HELD SHOWER	- KOHLER Stillness Handshower kit K-9059
18. TOILET and SEAT	- TOTO Aquia® Close Coupled Toilet and seat
19. ADA TOILET and SEAT	- TOTO Drake® II 1G™
20. BATHROOM FAUCET	- KOHLER Stillness K-942-4 faucet
21. SINGLE HOLE FAUCET	- HANSGROHE Metric S 31060001 faucet
22. UNDERMOUNT SINK	- TOTO LT191(G) Undermount lavatory
23. ADA FREESTANDING SINK	- KOHLER Reve K-5027
24. BATHTUB	- KOHLER K-1946-LA
25. ADA SHOWER TYPE 1	- 30" x 60" clear space. See interior elevations.
26. ADA SHOWER TYPE 2	- 48" X 42" clear space. See interior elevations.

27. NOT USED
28. NOT USED
29. ADA TOILET FLOOR SPACE: 48"W X 36"D min. clear per CBC sec. 1134A.7.
30. ADA BATHTUB FLOOR SPACE: 30"W X 48"L min.clear per CBC sec. 1134A.5
31. ADA SHOWER FLOOR SPACE: 30"W X 48"L min. clear at alternative roll-in shower per CBC sec. 1134A.6 & fig. 11A-9K. (Or 30"W X 42"L for alternate rollin-in shower)
32. ADA LAVATORY FLOOR SPACE: 30"W X 48"L min. clear per CBC sec. 1134A.8. Base cabinets directly under sink shall be removable to provide clearance for wheelchair. Provide cabinet sides and extend finished flooring under cabinets to rear wall. Max. height of fixture rim to be 34".
33. TOILET REAR/SIDE WALL GRAB BAR & REINFORCEMENT: Toilet grab bar for accessible bathrooms shall be Bobrick B68137 36" x 54". Provide 2X backing at rear wall 32" to 38" A.F.F., Extend 40" min. in length behind water closet and 26" min. in front of water closet (6" Min. in height. - Must support 250 lbs. min.), per CBC sec. 1134.7.2. When not adjacent to side wall, provide reinforcement for installation of floor-mounted, fold away or similar alternative grab bar.
34. BATHTUB BACK WALL GRAB BAR REINFORCEMENT: Provide 2x backing at the back wall 6" max. above the bathtub rim, extending to 38" min. in height A.F.F.. Extend horizontally 48" in length, with each end 6" max. from each end wall. (6" min. in height. - must support 250 lbs. min.), per CBC sec. 1134.5.2
35. BATHTUB END WALL GRAB BAR REINFORCEMENT: Provide 2x backing at each end wall 32" to 38" A.F.F. starting at the front face of tub and extending 24" min. toward back wall. (6" min. in ht. - must support 250 lbs. min.), per CBC sec. 1134A.5.2.
36. SHOWER WALL GRAB BAR & REINFORCEMENT: Provide continuous 2x backing at all walls 32" to 38" a.f.f. (6" min. in ht. - must support 250 lbs. min.), per CBC sec. 1134A.6.4. When walls are glass, provide reinforcement for installation of floor-mounted or ceiling-mounted grab bars.
37. BATHROOM COUNTERTOP: Height at 34" A.F.F. Owner to select material.

CLOSET

38. Shelf and pole per owner (U.N.O.)

LINEN

39. Per owner (U.N.O.)

MECHANICAL

40. Typical water heater per MEP
41. Furnace per MEP
42. Main electrical panel per MEP

DOOR

43. PULL SIDE AND PUSH SIDE FRONT APPROACH DOOR CLEARANCE: Per CBC sec. 1126A & fig. 11A-8A.
44. HINGE SIDE PULL SIDE AND PUSH SIDE APPROACH DOOR CLEARANCE: Per CBC sec. 1126A & fig. 11A-8B.
45. LATCH SIDE PULL SIDE AND PUSH SIDE APPROACH DOOR CLEARANCE: Per CBC sec. 1126A & fig. 11A-8C.
46. LATCH SIDE APPROACH POCKET DOOR CLEARANCE: Per CBC sec. 1126A & fig. 11A-8F.
47. ACCESSIBLE DOOR THRESHOLD: Per CBC sec. 1132A.4.

GENERAL REQUIREMENTS

48. LINE OF SOFFIT ABOVE
49. GUARDRAIL OR SHORT WALL AT 42" A.F.F. (U.N.O.)

FLOOR PLAN LEGEND

EXTERIOR WALL: 2X4 wood stud @ 16" O.C. with 1 layer of ⅝" gypsum board inside, ⅝" sheathing +⅞" stucco on outside.

EXTERIOR WALL: 2X6 wood stud @ 16" O.C. with 1 layer of ⅝" gypsum board inside, ⅝" sheathing +⅞" stucco on outside.

INTERIOR WALL: 2X4 wood stud @ 16" O.C. with 1 layer of ⅝" gypsum board on each side.

INTERIOR WALL: 2X6 wood stud @ 16" O.C. with 1 layer of ⅝" gypsum board on each side.

1 HOUR FIRE RATED WALL: 2X4 wood stud @ 16" O.C. with 1 layer of ⅝" gypsum board on inside and ¾" cement plaster on outside. Per CBC 2013 Table 721.1(2) Item Number 15-13

WALL OPENING: 80" high u.n.o. Finished with ⅝" gypsum board with square corners.

3½" U.N.O.

DOOR AND SYMBOL. See door schedule for complete information

FIELD COPY

WINDOW AND SYMBOL. See window schedule for complete information

TECHNE
DESIGN | DEVELOPMENT
3956 30th Street, San Diego, CA 92104
techne-us.com sustainablearchitect.org
o 619-940-5814 m 313-595-5814

CONSULTANTS

LICENSED ARCHITECT
MICHAEL RENE MORTON
C-19371
REN. 04/30/2015
STATE OF CALIFORNIA

414 29th Avenue
Oakland, CA 94601

OWNER

29th Avenue Group, LLC
1211 Embarcadero Way, Suite D
Oakland, CA 94606

BuildZig
Dream it. Build it. Zig it.

MARK	DATE	DESCRIPTION
01	11.10.14	1st Building Permit Submittal
02	02.23.15	2nd Building Permit Submittal

2/24/2015 1:44:07 PM

PROJECT NO: 1410
CAD DWG FILE: A114 - UNIT PLANS - PROPOSED.DWG
DRAWN BY: A.S., M.M., J.C., J.S.
CHK'D BY: A.S., M.M

COPYRIGHT: TECHNE expressly reserves its common law copyright and other property rights in this document. This document shall not be reproduced, copied, changed or disclosed in any form or manner whatsoever without first obtaining the express written consent of TECHNE.

SHEET TITLE
UNIT PLANS-
PROPOSED - 14

A123

SHEET -- OF 100

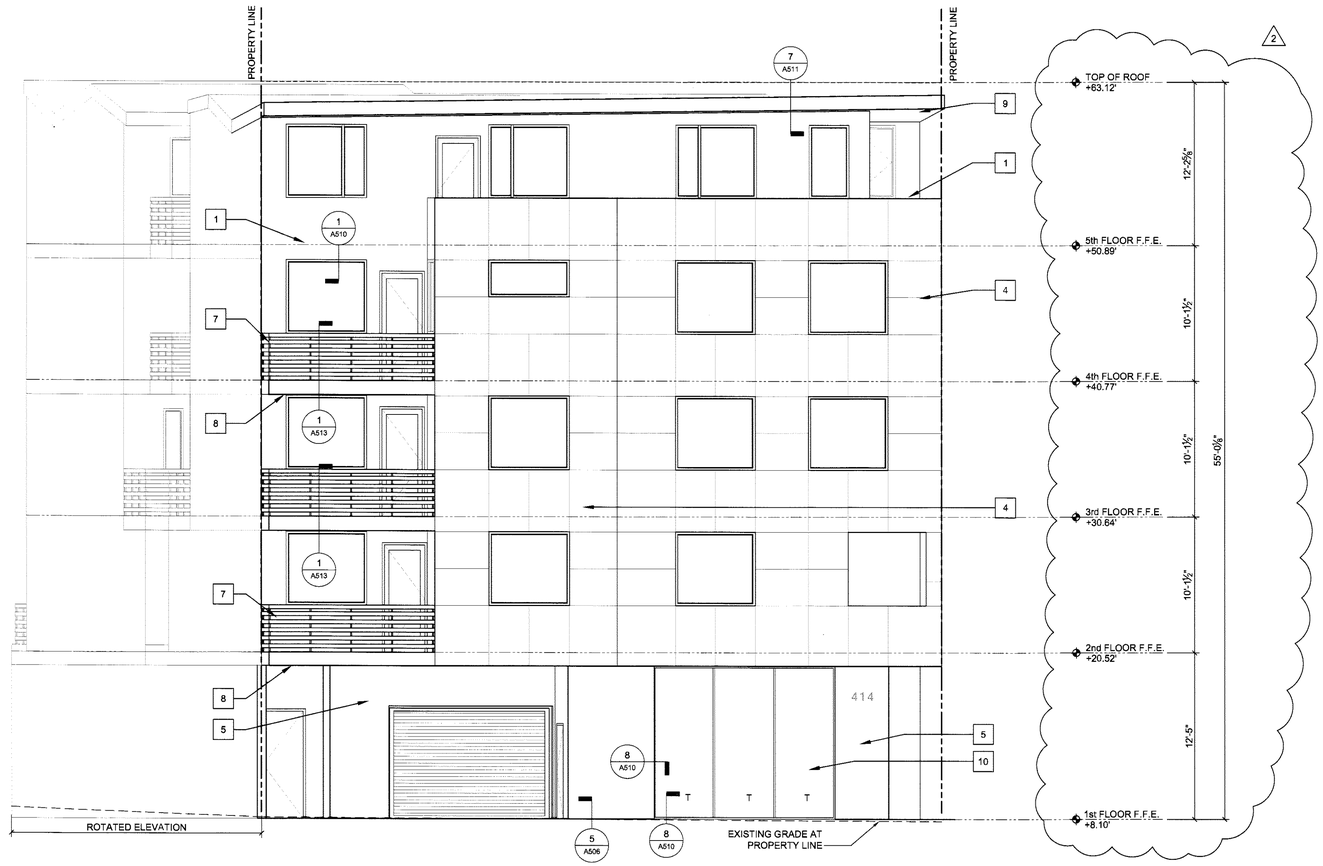

1 WEST ELEVATION
SCALE: 3/16" = 1'-0"

AREA OF EXTERIOR WALL OPENINGS	
Fire Separation: 3' to less than 5'	
Second Floor	
Maximum Allowable Opening Area	15.0%
	21.3 sf
Proposed Wall Area	141.8 sf
Proposed Opening Area	19.3 sf
	13.6%
Third Floor	
Maximum Allowable Opening Area	15.0%
	24.3 sf
Proposed Wall Area	162.0 sf
Proposed Opening Area	22.5 sf
	13.9%
Fouth Floor	
Maximum Allowable Opening Area	15.0%
	21.3 sf
Proposed Wall Area	141.8 sf
Proposed Opening Area	21.3 sf
	15.0%
Fifth Floor	
Maximum Allowable Opening Area	15.0%
	15.2 sf
Proposed Wall Area	101.3 sf
Proposed Opening Area	14.6 sf
	14.4%

ELEVATION KEYNOTES

EXTERIOR FINISHES

1. STUCCO 1: 7/8" thick 3-coat Portland Cement Stucco: Finish coat to be hand applied. Finish texture to be Fine Sand Float - 16-20. Color shall be dark red, selected by Architect. Prior to application contractor shall submit a 4' X 4' sample panel of the stucco color and texture finish for Architect and Owner's approval. Building weatherproofing shall be 2 layers of Dupont Tyvek installed per manufacturer's installation instructions and by a Dupont Tyvek certified installer.
2. STUCCO 2: 7/8" thick 3-coat Portland Cement Stucco: Finish coat to be hand applied. Finish texture to be Fine Sand Float - 16-20 sand. Color shall be cream, selected by Architect. Prior to application contractor shall submit a 4' X 4' sample panel of the stucco color and texture finish for Architect and Owner's approval. Building weatherproofing shall be 2 layers of Dupont Tyvek installed per manufacturer's installation instructions and by a Dupont Tyvek certified installer.
3. STUCCO 3: 7/8" thick 3-coat Portland Cement Stucco: Finish coat to be hand applied. Finish texture to be Fine Sand Float - 16-20 sand. Color shall be light green, selected by Architect. Prior to application contractor shall submit a 4' X 4' sample panel of the stucco color and texture finish for Architect and Owner's approval. Building weatherproofing shall be 2 layers of Dupont Tyvek installed per manufacturer's installation instructions and by a Dupont Tyvek certified installer.
4. FIBER CEMENT BOARD CLADDING: Hardie® Reveal® Panel System installed per manufacturer's installation instructions. Color shall be dark blue. Installation method shall be rainscreen type using Dupont RainVent Batten system over 2 layers of Dupont Tyvek installed per manufacturer's installation instructions and by a Dupont Tyvek certified installer.
5. EXPOSED CONCRETE: Cast-in-place concrete wall.
6. NOT USED
7. GUARDRAIL: Machiche wood guardrail per detail.
8. DECK FASCIA: Machiche wood fascia board per detail.
9. ROOF FASCIA: Machiche wood fascia per detail.
10. STOREFRONT: Storefront system per details and notes.

ELEVATION NOTES

1. ELEVATION LINES SHOWN ARE FROM TOP OF SLAB (TOSL) OR TOP OF STRUCTURAL SHEATHING /DIAPHRAGM (TOSS).
2. ALL BUILDING AND SITE ELEVATION LINES SHOWN ARE CROSS REFERENCED TO THE SITE PLAN.
3. SEE SHEETS A301 AND A302 FOR BUILDING SECTIONS
4. SEE SPECIFICATIONS FOR ADDITIONAL REQUIREMENTS AND/OR MATERIALS.
5. CHIMNEY FLUE: Shall be at least two feet higher than all portion of the roof within 10' of the flue.
6. WINDOW AND DOOR HEIGHT: See Exterior Elevations
7. (T) TEMPERED GLAZING: See Window and Door Schedule & Notes
8. WINDOW INSET: All fixed windows on West Elevation shall be installed with a minimum 2" inset. All openings on south elevation shall be installed with an inset of 1"-2".

FIELD COPY

TECHNE
DESIGN | DEVELOPMENT
3956 30th Street, San Diego, CA 92104
techne-us.com sustainablearchitect.org
o 619-940-5814 m 313-595-5814

CONSULTANTS

LICENSED ARCHITECT
MICHAEL RENE MORTON
C-19371
REN. 04/30/2015
STATE OF CALIFORNIA

414 29th Avenue
Oakland, CA 94601

OWNER

29th Avenue Group, LLC
1211 Embarcadero Way, Suite D
Oakland, CA 94606

BuildZig
Dream it. Build it. Zig it.

APPROVED

MARK	DATE	DESCRIPTION
01	11.10.14	1st Building Permit Submittal
02	02.23.15	2nd Building Permit Submittal
03	03.13.15	3rd Building Permit Submittal
04	04.02.15	Elevator Revision
05	04.09.15	Permit Set

4/9/2015 10:25:12 AM

PROJECT NO: 1410

CAD DWG FILE: A201 - EXTERIOR ELEVATIONS - PROPOSED.DWG

DRAWN BY: A.S, M.M., J.C., J.S.

CHK'D BY: A.S., M.M

COPYRIGHT: TECHNE expressly reserves its common law copyright and other property rights in this document. This document shall not be reproduced, copied, changed or disclosed in any form or manner whatsoever without first obtaining the express written consent of TECHNE.

SHEET TITLE

EXTERIOR ELEVATIONS - PROPOSED

A201

SHEET -- OF 100

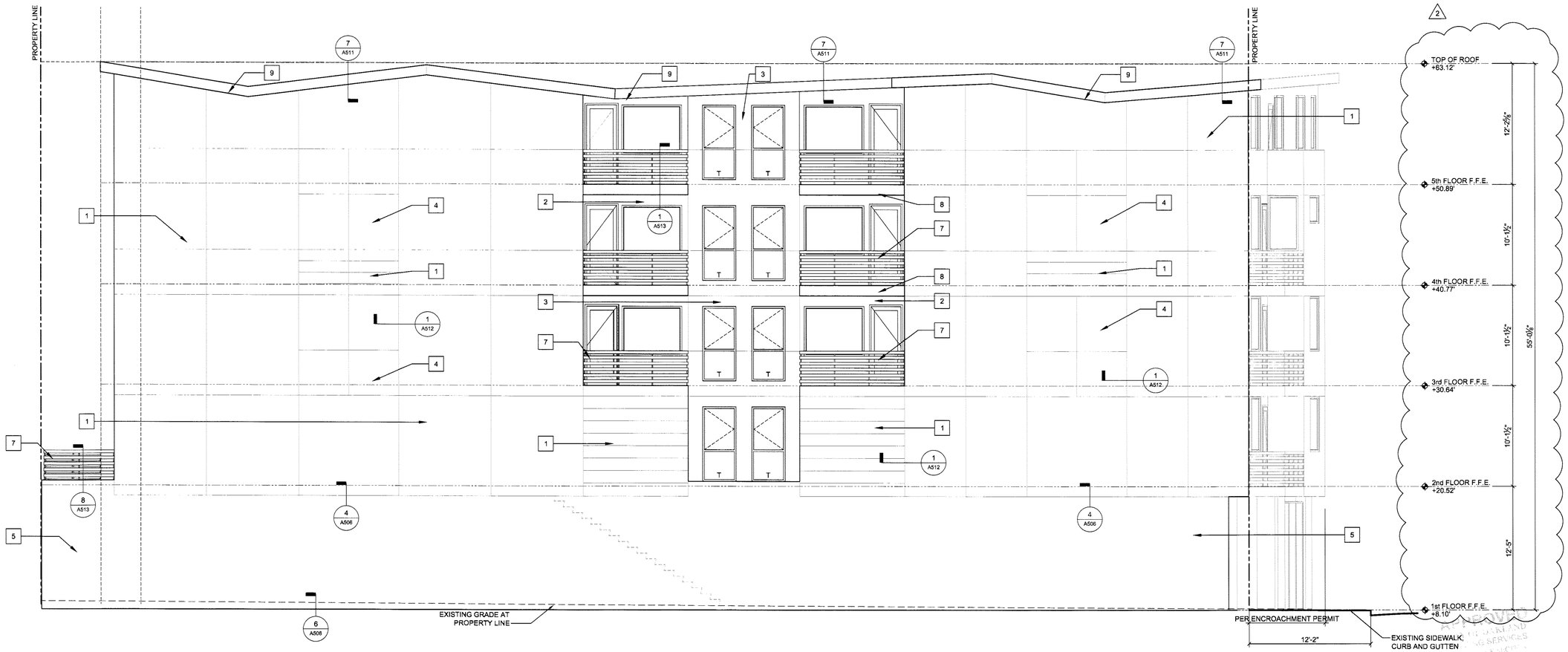

2 NORTH ELEVATION
SCALE: 3/16" = 1'-0"

AREA OF EXTERIOR WALL OPENINGS	
Fire Separation: 3' to less than 5'	
Second Floor	
Maximum Allowable Opening Area	15.0%
	21.3 sf
Proposed Wall Area	141.8 sf
Proposed Opening Area	19.3 sf
	13.6%
Third Floor	
Maximum Allowable Opening Area	15.0%
	24.3 sf
Proposed Wall Area	162.0 sf
Proposed Opening Area	22.5 sf
	13.9%
Fouth Floor	
Maximum Allowable Opening Area	15.0%
	21.3 sf
Proposed Wall Area	141.8 sf
Proposed Opening Area	21.3 sf
	15.0%
Fifth Floor	
Maximum Allowable Opening Area	15.0%
	15.2 sf
Proposed Wall Area	101.3 sf
Proposed Opening Area	14.6 sf
	14.4%

ELEVATION KEYNOTES

EXTERIOR FINISHES

1. STUCCO 1: 7/8" thick 3-coat Portland Cement Stucco: Finish coat to be hand applied. Finish texture to be Fine Sand Float - 16-20. Color shall be dark red, selected by Architect. Prior to application contractor shall submit a 4' X 4' sample panel of the stucco color and texture finish for Architect and Owner's approval. Building weatherproofing shall be 2 layers of Dupont Tyvek installed per manufacturer's installation instructions and by a Dupont Tyvek certified installer.
2. STUCCO 2: 7/8" thick 3-coat Portland Cement Stucco: Finish coat to be hand applied. Finish texture to be Fine Sand Float - 16-20 sand. Color shall be cream, selected by Architect. Prior to application contractor shall submit a 4' X 4' sample panel of the stucco color and texture finish for Architect and Owner's approval. Building weatherproofing shall be 2 layers of Dupont Tyvek installed per manufacturer's installation instructions and by a Dupont Tyvek certified installer.
3. STUCCO 3: 7/8" thick 3-coat Portland Cement Stucco: Finish coat to be hand applied. Finish texture to be Fine Sand Float - 16-20 sand. Color shall be light green, selected by Architect. Prior to application contractor shall submit a 4' X 4' sample panel of the stucco color and texture finish for Architect and Owner's approval. Building weatherproofing shall be 2 layers of Dupont Tyvek installed per manufacturer's installation instructions and by a Dupont Tyvek certified installer.
4. FIBER CEMENT BOARD CLADDING: Hardie® Reveal® Panel System installed per manufacturer's installation instructions. Color shall be dark blue. Installation method shall be rainscreen type using Dupont RainVent Batten system over 2 layers of Dupont Tyvek installed per manufacturer's installation instructions and by a Dupont Tyvek certified installer.
5. EXPOSED CONCRETE: Cast-in-place concrete wall.
6. NOT USED
7. GUARDRAIL: Machiche wood guardrail per detail.
8. DECK FASCIA: Machiche wood fascia board per detail.
9. ROOF FASCIA: Machiche wood fascia per detail.
10. STOREFRONT: Storefront system per details and notes.

ELEVATION NOTES

1. ELEVATION LINES SHOWN ARE FROM TOP OF SLAB (TOSL) OR TOP OF STRUCTURAL SHEATHING /DIAPHRAGM (TOSS).
2. ALL BUILDING AND SITE ELEVATION LINES SHOWN ARE CROSS REFERENCED TO THE SITE PLAN.
3. SEE SHEETS A301 AND A302 FOR BUILDING SECTIONS
4. SEE SPECIFICATIONS FOR ADDITIONAL REQUIREMENTS AND/OR MATERIALS.
5. CHIMNEY FLUE: Shall be at least two feet higher than all portion of the roof within 10' of the flue
6. WINDOW AND DOOR HEIGHT: See Exterior Elevations
7. (T) TEMPERED GLAZING: See Window and Door Schedule & Notes
8. WINDOW INSET: All fixed windows on West Elevation shall be installed with a minimum 2" inset. All openings on south elevation shall be installed with an inset of 1"-2".

FIELD COPY

TECHNE
DESIGN | DEVELOPMENT
3956 30th Street, San Diego, CA 92104
techne-us.com sustainablearchitect.org
o 619-940-5814 m 313-595-5814

CONSULTANTS

LICENSED ARCHITECT
MICHAEL RENE MORTON
C-19371
REN. 04/30/2015
STATE OF CALIFORNIA

414 29th Avenue
Oakland, CA 94601

OWNER

29th Avenue Group, LLC
1211 Embarcadero Way, Suite D
Oakland, CA 94606

BuildZig
Dream it. Build it. Zig it.

MARK	DATE	DESCRIPTION
01	11.10.14	1st Building Permit Submittal
02	02.23.15	2nd Building Permit Submittal
03	03.13.15	3rd Building Permit Submittal
04	04.02.15	Elevator Revision
05	04.09.15	Permit Set

4/9/2015 10:26:12 AM

PROJECT NO: 1410

CAD DWG FILE: A201 - EXTERIOR ELEVATIONS - PROPOSED.DWG

DRAWN BY: A.S, M.M., J.C., J.S.

CHK'D BY: A.S., M.M

COPYRIGHT: TECHNE expressly reserves its common law copyright and other property rights in this document. This document shall not be reproduced, copied, changed or disclosed in any form or manner whatsoever without first obtaining the express written consent of TECHNE.

SHEET TITLE

EXTERIOR ELEVATIONS - PROPOSED

A202

SHEET -- OF 100

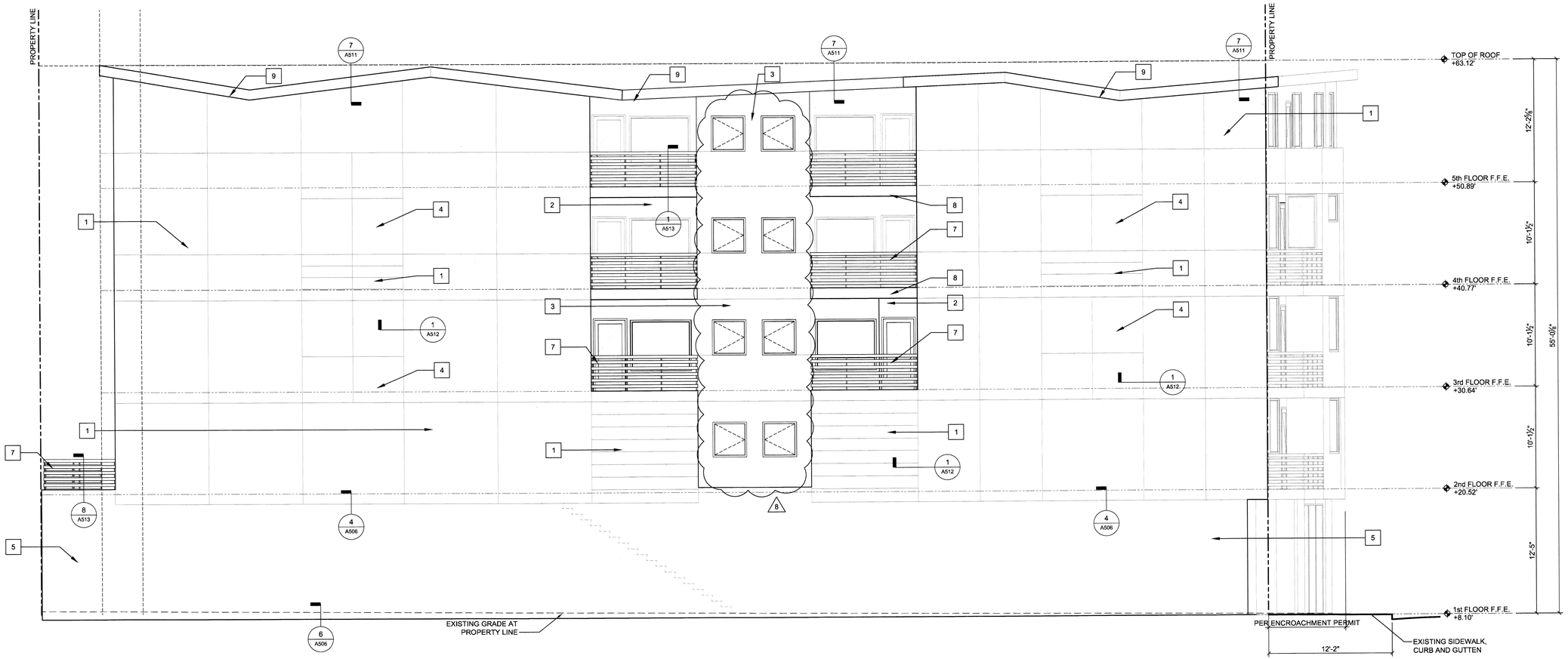

2 NORTH ELEVATION
SCALE: 3/16" = 1'-0"

AREA OF EXTERIOR WALL OPENINGS		AREA OF EXTERIOR WALL OPENINGS	
Fire Separation: 5' to less than 10'		**Fire Separation: 3' to less than 5'**	
Second Floor		Second Floor	
Maximum Allowable Opening Area	25.0%	Maximum Allowable Opening Area	15.0%
	620.7 sf		21.3 sf
Proposed Wall Area	2,482.9 sf	Proposed Wall Area	141.8 sf
Proposed Opening Area	164.5 sf	Proposed Opening Area	19.3 sf
	6.6%		**13.6%**
Third Floor		Third Floor	
Maximum Allowable Opening Area	25.0%	Maximum Allowable Opening Area	15.0%
	541.8 sf		24.3 sf
Proposed Wall Area	2,167.1 sf	Proposed Wall Area	162.0 sf
Proposed Opening Area	325.9 sf	Proposed Opening Area	22.5 sf
	15.0%		**13.9%**
Fourth Floor		Fouth Floor	
Maximum Allowable Opening Area	25.0%	Maximum Allowable Opening Area	15.0%
	541.8 sf		21.3 sf
Proposed Wall Area	2,167.1 sf	Proposed Wall Area	141.8 sf
Proposed Opening Area	314.7 sf	Proposed Opening Area	21.3 sf
	14.5%		**15.0%**
Fifth Floor		Fifth Floor	
Maximum Allowable Opening Area	25.0%	Maximum Allowable Opening Area	15.0%
	557.5 sf		15.2 sf
Proposed Wall Area	2,230.0 sf	Proposed Wall Area	101.3 sf
Proposed Opening Area	535.4 sf	Proposed Opening Area	14.6 sf
	24.0%		**14.4%**

ELEVATION KEYNOTES

EXTERIOR FINISHES

1. STUCCO 1: 7/8" thick 3-coat Portland Cement Stucco: Finish coat to be hand applied. Finish texture to be Fine Sand Float - 16-20. Color shall be dark red, selected by Architect. Prior to application contractor shall submit a 4' X 4' sample panel of the stucco color and texture finish for Architect and Owner's approval. Building weatherproofing shall be 2 layers of Dupont Tyvek installed per manufacturer's installation instructions and by a Dupont Tyvek certified installer.
2. STUCCO 2: 7/8" thick 3-coat Portland Cement Stucco: Finish coat to be hand applied. Finish texture to be Fine Sand Float - 16-20 sand. Color shall be cream, selected by Architect. Prior to application contractor shall submit a 4' X 4' sample panel of the stucco color and texture finish for Architect and Owner's approval. Building weatherproofing shall be 2 layers of Dupont Tyvek installed per manufacturer's installation instructions and by a Dupont Tyvek certified installer.
3. STUCCO 3: 7/8" thick 3-coat Portland Cement Stucco: Finish coat to be hand applied. Finish texture to be Fine Sand Float - 16-20 sand. Color shall be light green, selected by Architect. Prior to application contractor shall submit a 4' X 4' sample panel of the stucco color and texture finish for Architect and Owner's approval. Building weatherproofing shall be 2 layers of Dupont Tyvek installed per manufacturer's installation instructions and by a Dupont Tyvek certified installer.
4. FIBER CEMENT BOARD CLADDING: Hardie® Reveal® Panel System installed per manufacturer's installation instructions. Color shall be dark blue. Installation method shall be rainscreen type using Dupont RainVent Batten system over 2 layers of Dupont Tyvek installed per manufacturer's installation instructions and by a Dupont Tyvek certified installer.
5. EXPOSED CONCRETE: Cast-in-place concrete wall.
6. NOT USED
7. GUARDRAIL: Machiche wood guardrail per detail.
8. DECK FASCIA: Machiche wood fascia board per detail.
9. ROOF FASCIA: Machiche wood fascia per detail.
10. STOREFRONT: Storefront system per details and notes.

ELEVATION NOTES

1. ELEVATION LINES SHOWN ARE FROM TOP OF SLAB (TOSL) OR TOP OF STRUCTURAL SHEATHING /DIAPHRAGM (TOSS).
2. ALL BUILDING AND SITE ELEVATION LINES SHOWN ARE CROSS REFERENCED TO THE SITE PLAN.
3. SEE SHEETS A301 AND A302 FOR BUILDING SECTIONS
4. SEE SPECIFICATIONS FOR ADDITIONAL REQUIREMENTS AND/OR MATERIALS.
5. CHIMNEY FLUE: Shall be at least two feet higher than all portion of the roof within 10' of the flue.
6. WINDOW AND DOOR HEIGHT: See Exterior Elevations
7. (T) TEMPERED GLAZING: See Window and Door Schedule & Notes
8. WINDOW INSET: All fixed windows on West Elevation shall be installed with a minimum 2" inset. All openings on south elevation shall be installed with an inset [illegible]

CITY OF OAKLAND
PLAN REVISION

INITIALS	DEPARTMENT	DATE
	BUILDING INSPECTION	
	PLUMBING/MECHANICAL	
	ELECTRICAL	
NC	ZONING/DESIGN REVIEW	11/13/15
	FIRE MARSHAL	
	ENGINEERING	
	OTHER	
	PLAN CHECK	

TECHNE
DESIGN | DEVELOPMENT
3956 30th Street, San Diego, CA 92104
techne-us.com sustainablearchitect.org
o 619-940-5814 m 313-595-5814

CONSULTANTS

LICENSED ARCHITECT
MICHAEL RENE MORTON
C-19371
REN. 04/30/2017
STATE OF CALIFORNIA

414 29th Avenue
Oakland, CA 94601

OWNER

29th Avenue Group, LLC
1211 Embarcadero Way, Suite D
Oakland, CA 94606

BuildZig
Dream it. Build it. Zig it.

MARK	DATE	DESCRIPTION
04	04.02.15	Elevator Revision
05	04.09.15	Permit Set
06	08.19.15	Window Changes
07	10.06.15	Unit 1 Entry Door Relocation
08	10.27.15	Window Changes

10/28/2015 10:03:51 AM

PROJECT NO: 1410

CAD DWG FILE: A201 - EXTERIOR ELEVATIONS - PROPOSED - REVISED DWG

DRAWN BY: A.S, M.M., J.C., J.S.

CHK'D BY: A.S., M.M

COPYRIGHT: TECHNE expressly reserves its common law copyright and other property rights in this document. This document shall not be reproduced, copied, changed or disclosed in any form or manner whatsoever without first obtaining the express written consent of TECHNE.

SHEET TITLE

EXTERIOR ELEVATIONS - PROPOSED

A202

SHEET -- OF 100

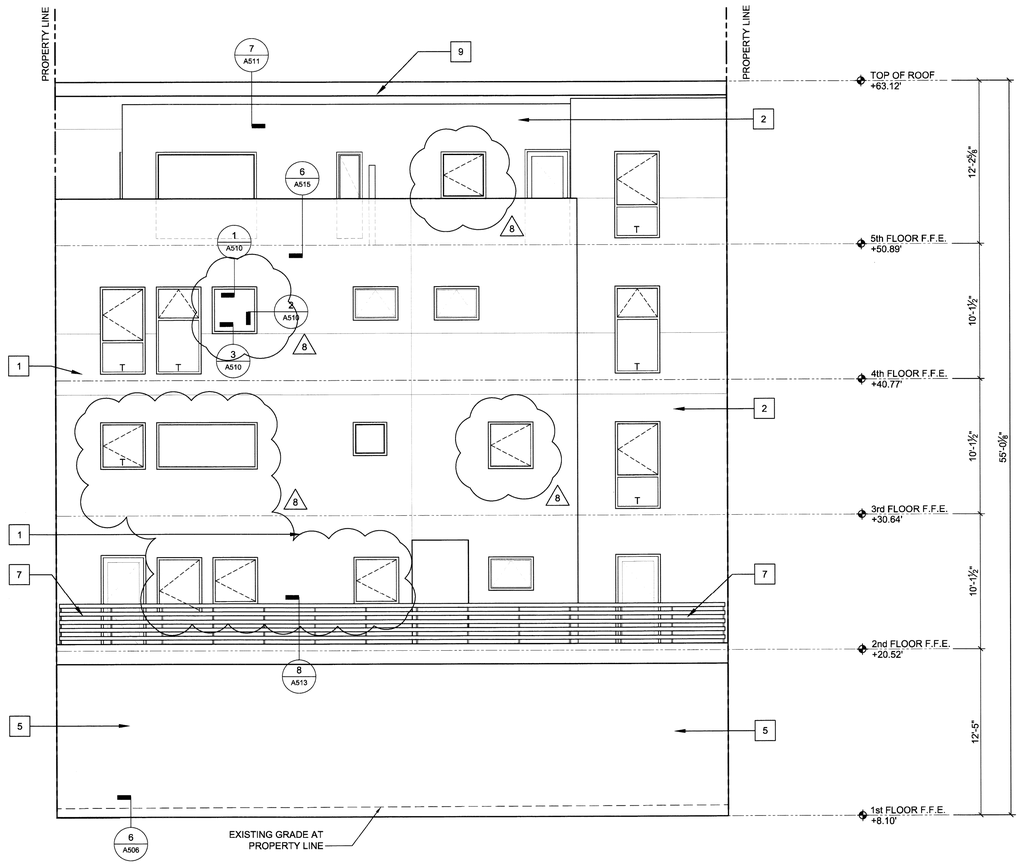

3 EAST ELEVATION
SCALE: 3/16" = 1'-0"

AREA OF EXTERIOR WALL OPENINGS	
Fire Separation: 5' to less than 10'	
Second Floor	
Maximum Allowable Opening Area	25.0%
	620.7 sf
Proposed Wall Area	2,482.9 sf
Proposed Opening Area	164.5 sf
	6.6%
Third Floor	
Maximum Allowable Opening Area	25.0%
	541.8 sf
Proposed Wall Area	2,167.1 sf
Proposed Opening Area	325.9 sf
	15.0%
Fourth Floor	
Maximum Allowable Opening Area	25.0%
	541.8 sf
Proposed Wall Area	2,167.1 sf
Proposed Opening Area	314.7 sf
	14.5%
Fifth Floor	
Maximum Allowable Opening Area	25.0%
	557.5 sf
Proposed Wall Area	2,230.0 sf
Proposed Opening Area	535.4 sf
	24.0%

AREA OF EXTERIOR WALL OPENINGS	
Fire Separation: 3' to less than 5'	
Second Floor	
Maximum Allowable Opening Area	15.0%
	21.3 sf
Proposed Wall Area	141.8 sf
Proposed Opening Area	19.3 sf
	13.6%
Third Floor	
Maximum Allowable Opening Area	15.0%
	24.3 sf
Proposed Wall Area	162.0 sf
Proposed Opening Area	22.5 sf
	13.9%
Fouth Floor	
Maximum Allowable Opening Area	15.0%
	21.3 sf
Proposed Wall Area	141.8 sf
Proposed Opening Area	21.3 sf
	15.0%
Fifth Floor	
Maximum Allowable Opening Area	15.0%
	15.2 sf
Proposed Wall Area	101.3 sf
Proposed Opening Area	14.6 sf
	14.4%

ELEVATION KEYNOTES

EXTERIOR FINISHES

1. STUCCO 1: 7/8" thick 3-coat Portland Cement Stucco: Finish coat to be hand applied. Finish texture to be Fine Sand Float - 16-20. Color shall be dark red, selected by Architect. Prior to application contractor shall submit a 4' X 4' sample panel of the stucco color and texture finish for Architect and Owner's approval. Building weatherproofing shall be 2 layers of Dupont Tyvek installed per manufacturer's installation instructions and by a Dupont Tyvek certified installer.
2. STUCCO 2: 7/8" thick 3-coat Portland Cement Stucco: Finish coat to be hand applied. Finish texture to be Fine Sand Float - 16-20 sand. Color shall be cream, selected by Architect. Prior to application contractor shall submit a 4' X 4' sample panel of the stucco color and texture finish for Architect and Owner's approval. Building weatherproofing shall be 2 layers of Dupont Tyvek installed per manufacturer's installation instructions and by a Dupont Tyvek certified installer.
3. STUCCO 3: 7/8" thick 3-coat Portland Cement Stucco: Finish coat to be hand applied. Finish texture to be Fine Sand Float - 16-20 sand. Color shall be light green, selected by Architect. Prior to application contractor shall submit a 4' X 4' sample panel of the stucco color and texture finish for Architect and Owner's approval. Building weatherproofing shall be 2 layers of Dupont Tyvek installed per manufacturer's installation instructions and by a Dupont Tyvek certified installer.
4. FIBER CEMENT BOARD CLADDING: Hardie® Reveal® Panel System installed per manufacturer's installation instructions. Color shall be dark blue. Installation method shall be rainscreen type using Dupont RainVent Batten system over 2 layers of Dupont Tyvek installed per manufacturer's installation instructions and by a Dupont Tyvek certified installer.
5. EXPOSED CONCRETE: Cast-in-place concrete wall.
6. NOT USED
7. GUARDRAIL: Machiche wood guardrail per detail.
8. DECK FASCIA: Machiche wood fascia board per detail.
9. ROOF FASCIA: Machiche wood fascia per detail.
10. STOREFRONT: Storefront system per details and notes.

ELEVATION NOTES

1. ELEVATION LINES SHOWN ARE FROM TOP OF SLAB (TOSL) OR TOP OF STRUCTURAL SHEATHING /DIAPHRAGM (TOSS).
2. ALL BUILDING AND SITE ELEVATION LINES SHOWN ARE CROSS REFERENCED TO THE SITE PLAN.
3. SEE SHEETS A301 AND A302 FOR BUILDING SECTIONS
4. SEE SPECIFICATIONS FOR ADDITIONAL REQUIREMENTS AND/OR MATERIALS.
5. CHIMNEY FLUE: Shall be at least two feet higher than all portion of the roof within 10' of the flue.
6. WINDOW AND DOOR HEIGHT: See Exterior Elevations
7. (T) TEMPERED GLAZING: See Window and Door Schedule & Notes
8. WINDOW INSET: All fixed windows on West Elevation shall be installed with a minimum 2" inset. All openings on south elevation shall be installed with an inset of 1"-2".

CITY OF OAKLAND
PLAN REVISION

INITIALS	DEPARTMENT	DATE
	BUILDING INSPECTION	
	PLUMBING/MECHANICAL	
	ELECTRICAL	
NB	ZONING/DESIGN REVIEW	11/17/15
	FIRE MARSHAL	
	ENGINEERING	
	OTHER	
	PLAN CHECK	

TECHNE
DESIGN | DEVELOPMENT
3956 30th Street, San Diego, CA 92104
techne-us.com sustainablearchitect.org
o 619-940-5814 m 313-595-5814

CONSULTANTS

LICENSED ARCHITECT
MICHAEL RENE MORTON
C-19371
REN. 04/30/2017
STATE OF CALIFORNIA

414 29th Avenue
Oakland, CA 94601

OWNER

29th Avenue Group, LLC
1211 Embarcadero Way, Suite D
Oakland, CA 94606

BuildZig
Dream it. Build it. Zig it.

MARK	DATE	DESCRIPTION
04	04.02.15	Elevator Revision
05	04.09.15	Permit Set
06	08.19.15	Window Changes
07	10.06.15	Unit 1 Entry Door Relocation
08	10.27.15	Window Changes

10/28/2015 10:03:51 AM

PROJECT NO: 1410
CAD DWG FILE: A201 - EXTERIOR ELEVATIONS - PROPOSED - REVISED.DWG
DRAWN BY: A.S, M.M., J.C., J.S.
CHK'D BY: A.S., M.M

COPYRIGHT: TECHNE expressly reserves its common law copyright and other property rights in this document. This document shall not be reproduced, copied, changed or disclosed in any form or manner whatsoever without first obtaining the express written consent of TECHNE

SHEET TITLE
EXTERIOR ELEVATIONS - PROPOSED

A203

SHEET – OF 100

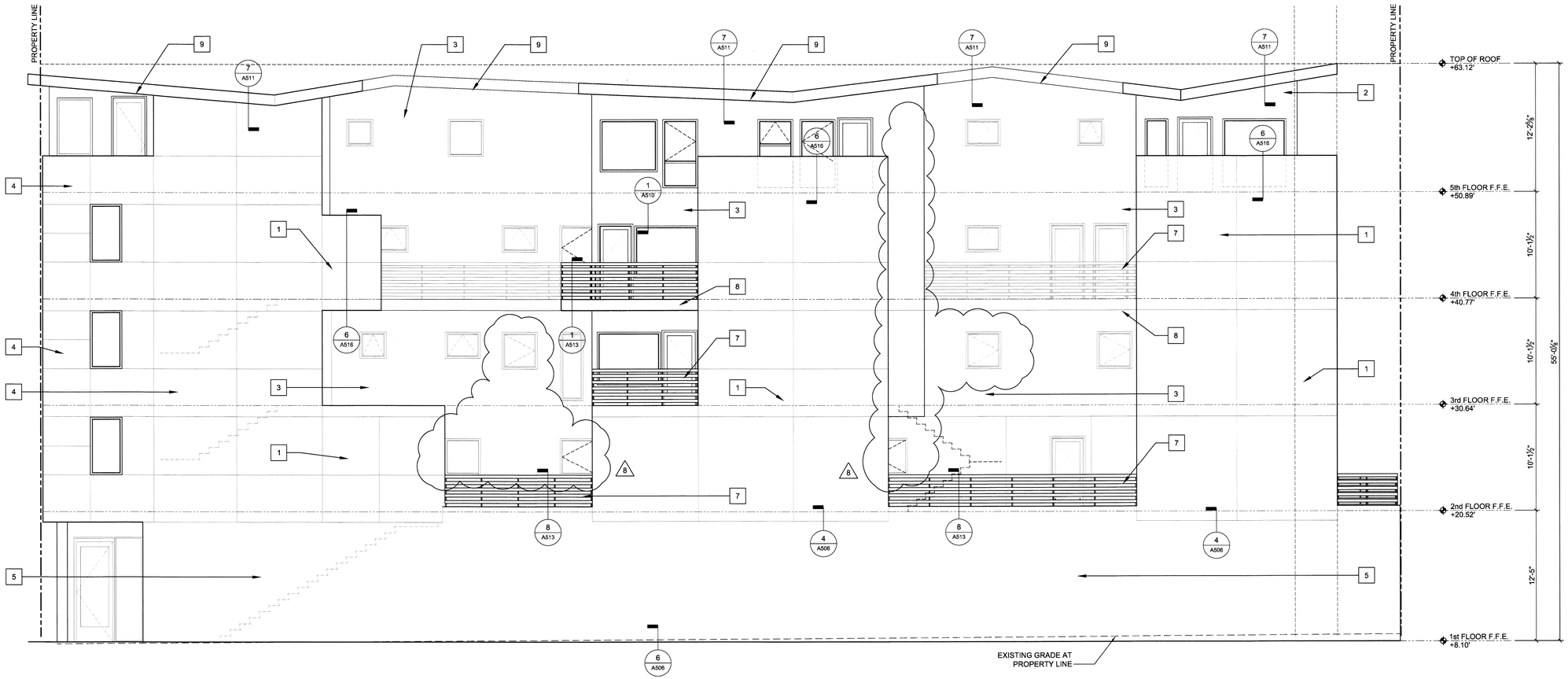

4 SOUTH ELEVATION
SCALE: 3/16" = 1'-0"

AREA OF EXTERIOR WALL OPENINGS		AREA OF EXTERIOR WALL OPENINGS	
Fire Separation: 5' to less than 10'		**Fire Separation: 3' to less than 5'**	
Second Floor		Second Floor	
Maximum Allowable Opening Area	25.0%	Maximum Allowable Opening Area	15.0%
	620.7 sf		21.3 sf
Proposed Wall Area	2,482.9 sf	Proposed Wall Area	141.8 sf
Proposed Opening Area	164.5 sf	Proposed Opening Area	19.3 sf
	6.6%		**13.6%**
Third Floor		Third Floor	
Maximum Allowable Opening Area	25.0%	Maximum Allowable Opening Area	15.0%
	541.8 sf		24.3 sf
Proposed Wall Area	2,167.1 sf	Proposed Wall Area	162.0 sf
Proposed Opening Area	325.9 sf	Proposed Opening Area	22.5 sf
	15.0%		**13.9%**
Fourth Floor		Fouth Floor	
Maximum Allowable Opening Area	25.0%	Maximum Allowable Opening Area	15.0%
	541.8 sf		21.3 sf
Proposed Wall Area	2,167.1 sf	Proposed Wall Area	141.8 sf
Proposed Opening Area	314.7 sf	Proposed Opening Area	21.3 sf
	14.5%		**15.0%**
Fifth Floor		Fifth Floor	
Maximum Allowable Opening Area	25.0%	Maximum Allowable Opening Area	15.0%
	557.5 sf		15.2 sf
Proposed Wall Area	2,230.0 sf	Proposed Wall Area	101.3 sf
Proposed Opening Area	535.4 sf	Proposed Opening Area	14.6 sf
	24.0%		**14.4%**

ELEVATION KEYNOTES

EXTERIOR FINISHES

1. STUCCO 1: 7/8" thick 3-coat Portland Cement Stucco: Finish coat to be hand applied. Finish texture to be Fine Sand Float - 16-20. Color shall be dark red, selected by Architect. Prior to application contractor shall submit a 4' X 4' sample panel of the stucco color and texture finish for Architect and Owner's approval. Building weatherproofing shall be 2 layers of Dupont Tyvek installed per manufacturer's installation instructions and by a Dupont Tyvek certified installer.
2. STUCCO 2: 7/8" thick 3-coat Portland Cement Stucco: Finish coat to be hand applied. Finish texture to be Fine Sand Float - 16-20 sand. Color shall be cream, selected by Architect. Prior to application contractor shall submit a 4' X 4' sample panel of the stucco color and texture finish for Architect and Owner's approval. Building weatherproofing shall be 2 layers of Dupont Tyvek installed per manufacturer's installation instructions and by a Dupont Tyvek certified installer.
3. STUCCO 3: 7/8" thick 3-coat Portland Cement Stucco: Finish coat to be hand applied. Finish texture to be Fine Sand Float - 16-20 sand. Color shall be light green, selected by Architect. Prior to application contractor shall submit a 4' X 4' sample panel of the stucco color and texture finish for Architect and Owner's approval. Building weatherproofing shall be 2 layers of Dupont Tyvek installed per manufacturer's installation instructions and by a Dupont Tyvek certified installer.
4. FIBER CEMENT BOARD CLADDING: Hardie® Reveal® Panel System installed per manufacturer's installation instructions. Color shall be dark blue. Installation method shall be rainscreen type using Dupont RainVent Batten system over 2 layers of Dupont Tyvek installed per manufacturer's installation instructions and by a Dupont Tyvek certified installer.
5. EXPOSED CONCRETE: Cast-in-place concrete wall.
6. NOT USED
7. GUARDRAIL: Machiche wood guardrail per detail.
8. DECK FASCIA: Machiche wood fascia board per detail.
9. ROOF FASCIA: Machiche wood fascia per detail.
10. STOREFRONT: Storefront system per details and notes.

ELEVATION NOTES

1. ELEVATION LINES SHOWN ARE FROM TOP OF SLAB (TOSL) OR TOP OF STRUCTURAL SHEATHING /DIAPHRAGM (TOSS).
2. ALL BUILDING AND SITE ELEVATION LINES SHOWN ARE CROSS REFERENCED TO THE SITE PLAN.
3. SEE SHEETS A301 AND A302 FOR BUILDING SECTIONS
4. SEE SPECIFICATIONS FOR ADDITIONAL REQUIREMENTS AND/OR MATERIALS.
5. CHIMNEY FLUE: Shall be at least two feet higher than all portion of the roof within 10' of the flue.
6. WINDOW AND DOOR HEIGHT: See Exterior Elevations
7. (T) TEMPERED GLAZING: See Window and Door Schedule & Notes
8. WINDOW INSET: All fixed windows on West Elevation shall be installed with a minimum 2" inset. All openings on south elevation shall be installed with an inset of 1"-2".

CITY OF OAKLAND
PLAN REVISION

INITIALS	DEPARTMENT	DATE
	BUILDING INSPECTION	
	PLUMBING/MECHANICAL	
	ELECTRICAL	
NG	ZONING/DESIGN REVIEW	11/17/15
	FIRE MARSHAL	
	ENGINEERING	
	OTHER	
	PLAN CHECK	

TECHNE
DESIGN | DEVELOPMENT
3956 30th Street, San Diego, CA 92104
techne-us.com sustainablearchitect.org
o 619-940-5814 m 313-595-5814

CONSULTANTS

LICENSED ARCHITECT
MICHAEL RENE NORTON
C-19371
REN. 04/30/2017
STATE OF CALIFORNIA

414 29th Avenue
Oakland, CA 94601

OWNER

29th Avenue Group, LLC
1211 Embarcadero Way, Suite D
Oakland, CA 94606

BuildZig
Dream it. Build it. Zig it.

MARK	DATE	DESCRIPTION
04	04.02.15	Elevator Revision
05	04.09.15	Permit Set
06	08.19.15	Window Changes
07	10.06.15	Unit 1 Entry Door Relocation
08	10.27.15	Window Changes

10/28/2015 10:03:51 AM

PROJECT NO: 1410
CAD DWG FILE: A201 - EXTERIOR ELEVATIONS - PROPOSED - REVISED DWG
DRAWN BY: A.S, M.M., J.C., J.S.
CHK'D BY: A.S., M.M

COPYRIGHT: TECHNE expressly reserves its common law copyright and other property rights in this document. This document shall not be reproduced, copied, changed or disclosed in any form or manner whatsoever without first obtaining the express written consent of TECHNE.

SHEET TITLE
EXTERIOR ELEVATIONS - PROPOSED

A204

SHEET -- OF 100

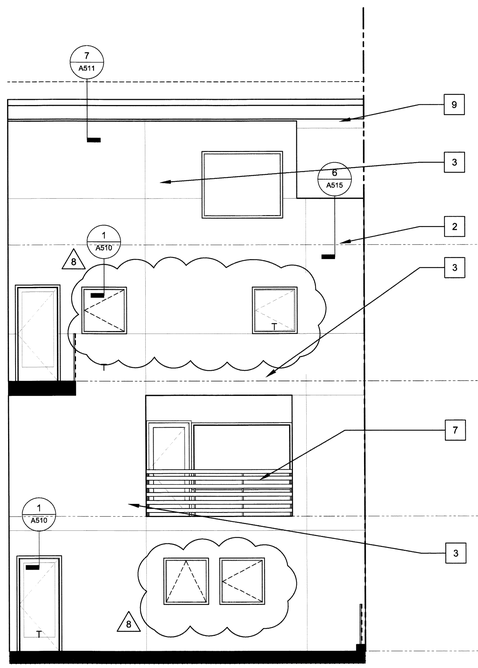

4 COURTYARD WEST ELEVATION
SCALE: 3/16" = 1'-0"

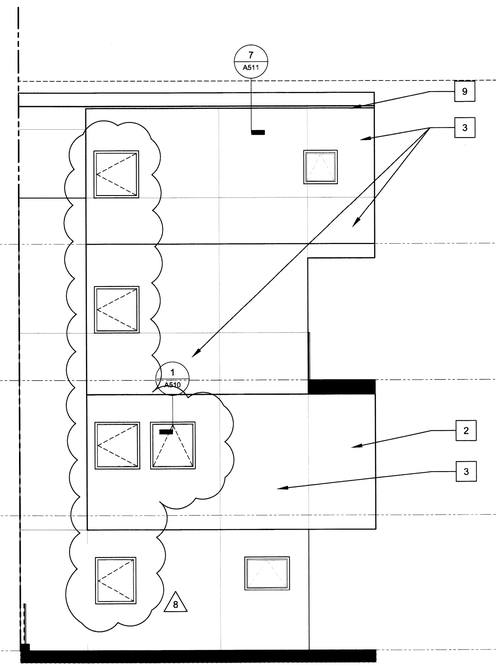

3 COURTYARD EAST ELEVATION
SCALE: 3/16" = 1'-0"

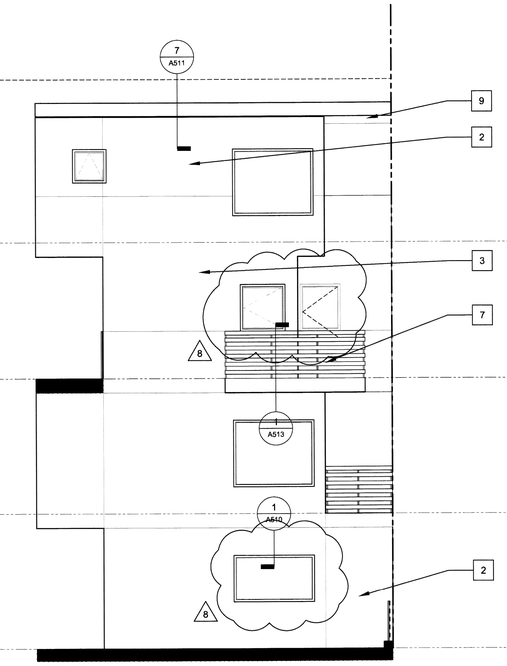

2 COURTYARD WEST ELEVATION
SCALE: 3/16" = 1'-0"

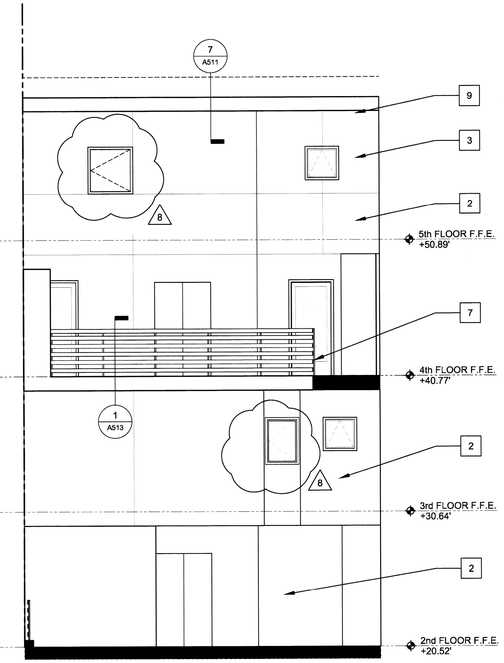

1 COURTYARD EAST ELEVATION
SCALE: 3/16" = 1'-0"

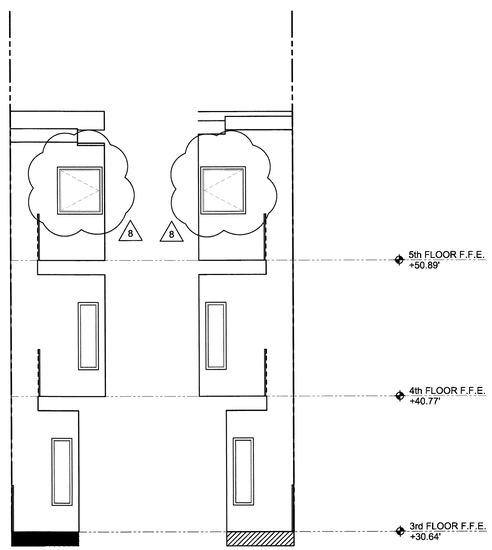

5 NORTH ELEVATION
SCALE: 3/16" = 1'-0"

6 SOUTH ELEVATION
SCALE: 3/16" = 1'-0"

AREA OF EXTERIOR WALL OPENINGS	
Fire Separation: 3' to less than 5'	
Second Floor	
Maximum Allowable Opening Area	15.0%
	21.3 sf
Proposed Wall Area	141.8 sf
Proposed Opening Area	19.3 sf
	13.6%
Third Floor	
Maximum Allowable Opening Area	15.0%
	24.3 sf
Proposed Wall Area	162.0 sf
Proposed Opening Area	22.5 sf
	13.9%
Fouth Floor	
Maximum Allowable Opening Area	15.0%
	21.3 sf
Proposed Wall Area	141.8 sf
Proposed Opening Area	21.3 sf
	15.0%
Fifth Floor	
Maximum Allowable Opening Area	15.0%
	15.2 sf
Proposed Wall Area	101.3 sf
Proposed Opening Area	14.6 sf
	14.4%

ELEVATION KEYNOTES

EXTERIOR FINISHES

1. STUCCO 1: 7/8" thick 3-coat Portland Cement Stucco: Finish coat to be hand applied. Finish texture to be Fine Sand Float - 16-20. Color shall be dark red, selected by Architect. Prior to application contractor shall submit a 4' X 4' sample panel of the stucco color and texture finish for Architect and Owner's approval. Building weatherproofing shall be 2 layers of Dupont Tyvek installed per manufacturer's installation instructions and by a Dupont Tyvek certified installer.
2. STUCCO 2: 7/8" thick 3-coat Portland Cement Stucco: Finish coat to be hand applied. Finish texture to be Fine Sand Float - 16-20 sand. Color shall be cream, selected by Architect. Prior to application contractor shall submit a 4' X 4' sample panel of the stucco color and texture finish for Architect and Owner's approval. Building weatherproofing shall be 2 layers of Dupont Tyvek installed per manufacturer's installation instructions and by a Dupont Tyvek certified installer.
3. STUCCO 3: 7/8" thick 3-coat Portland Cement Stucco: Finish coat to be hand applied. Finish texture to be Fine Sand Float - 16-20 sand. Color shall be light green, selected by Architect. Prior to application contractor shall submit a 4' X 4' sample panel of the stucco color and texture finish for Architect and Owner's approval. Building weatherproofing shall be 2 layers of Dupont Tyvek installed per manufacturer's installation instructions and by a Dupont Tyvek certified installer.
4. FIBER CEMENT BOARD CLADDING: Hardie® Reveal® Panel System installed per manufacturer's installation instructions. Color shall be dark blue. Installation method shall be rainscreen type using Dupont RainVent Batten system over 2 layers of Dupont Tyvek installed per manufacturer's installation instructions and by a Dupont Tyvek certified installer.
5. EXPOSED CONCRETE: Cast-in-place concrete wall.
6. NOT USED
7. GUARDRAIL: Machiche wood guardrail per detail.
8. DECK FASCIA: Machiche wood fascia board per detail.
9. ROOF FASCIA: Machiche wood fascia per detail.
10. STOREFRONT: Storefront system per details and notes.

ELEVATION NOTES

1. ELEVATION LINES SHOWN ARE FROM TOP OF SLAB (TOSL) OR TOP OF STRUCTURAL SHEATHING /DIAPHRAGM (TOSS).
2. ALL BUILDING AND SITE ELEVATION LINES SHOWN ARE CROSS REFERENCED TO THE SITE PLAN.
3. SEE SHEETS A301 AND A302 FOR BUILDING SECTIONS
4. SEE SPECIFICATIONS FOR ADDITIONAL REQUIREMENTS AND/OR MATERIALS.
5. CHIMNEY FLUE: Shall be at least two feet higher than all portion of the roof within 10' of the flue.
6. WINDOW AND DOOR HEIGHT: See Exterior Elevations
7. (T) TEMPERED GLAZING: See Window and Door Schedule & Notes
8. WINDOW INSET: All fixed windows on West Elevation shall be installed with a minimum 2" inset. All openings on south elevation shall be installed with an inset [illegible]

CITY OF OAKLAND
PLAN REVISION

INITIALS	DEPARTMENT	DATE
	BUILDING INSPECTION	
	PLUMBING/MECHANICAL	
	ELECTRICAL	
NG	ZONING/DESIGN REVIEW	11/7/16
	FIRE MARSHAL	
	ENGINEERING	
	OTHER	
	PLAN CHECK	

TECHNE
DESIGN | DEVELOPMENT
3956 30th Street, San Diego, CA 92104
techne-us.com sustainablearchitect.org
o 619-940-5814 m 313-595-5814

CONSULTANTS

LICENSED ARCHITECT
MICHAEL RENE NORTON
C-19371
REN. 04/30/2017
STATE OF CALIFORNIA

414 29th Avenue
Oakland, CA 94601

OWNER

29th Avenue Group, LLC
1211 Embarcadero Way, Suite D
Oakland, CA 94606

BuildZig
Dream it. Build it. Zig it.

MARK	DATE	DESCRIPTION
04	04.02.15	Elevator Revision
05	04.09.15	Permit Set
06	08.19.15	Window Changes
07	10.06.15	Unit 1 Entry Door Relocation
08	10.27.15	Window Changes

10/26/2015 12:03:51 AM

PROJECT NO: 1410
CAD DWG FILE: A201 - EXTERIOR ELEVATIONS - PROPOSED - REVISED.DWG
DRAWN BY: A.S, M.M., J.C., J.S.
CHK'D BY: A.S., M.M

COPYRIGHT: TECHNE expressly reserves its common law copyright and other property rights in this document. This document shall not be reproduced, copied, changed or disclosed in any form or manner whatsoever without first obtaining the express written consent of TECHNE.

SHEET TITLE

EXTERIOR ELEVATIONS - PROPOSED

A205

SHEET -- OF 100

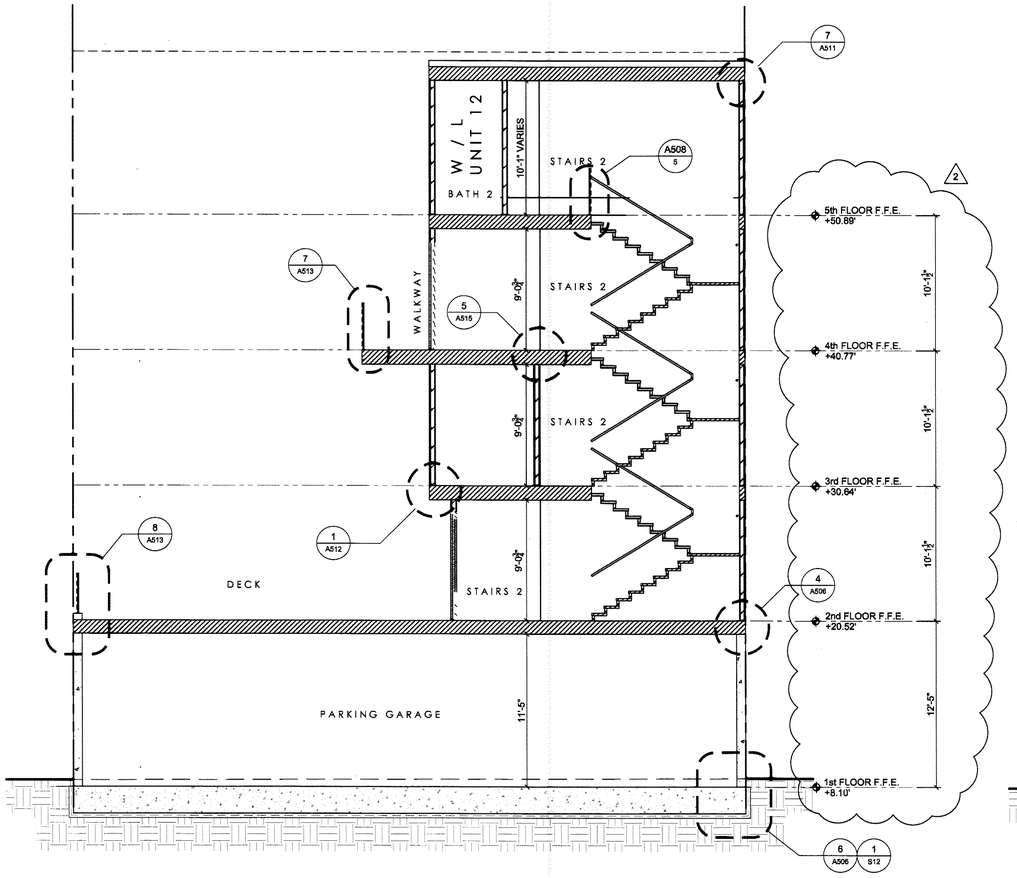

A BUILDING SECTION A
SCALE: 3/16" = 1'-0"

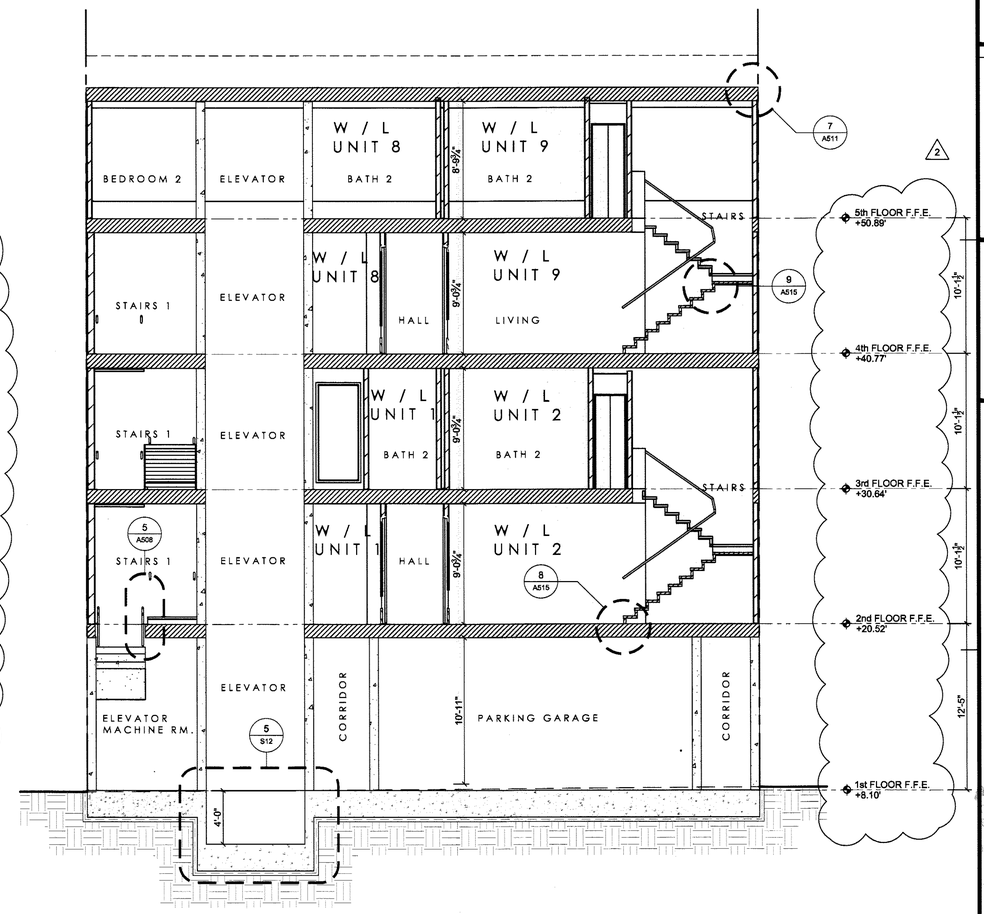

B BUILDING SECTION B
SCALE: 3/16" = 1'-0"

SECTION NOTES

A. This Building Section drawing is for general information only.
B. Refer to Structural Engineering drawings for additional information.
C. It is the responsibility of the General Contractor to ensure the proposed structure is designed and built in accordance with all applicable codes and regulations.
D. Written dimensions shall take precedence over scaled dimensions and shall be verified on the job site. On-site verification of all dimensions and conditions shall be the sole responsibility of the General Contractor and Sub-Contractors.
E. The Contractor or sub-contractor shall notify TECHNE if any conflicts or discrepancy occurs between this information on this plan and actual field conditions.
F. Any discrepancies with this drawing affecting project layout shall be brought to the attention of TECHNE. Do not proceed with work until written or verbal instructions are issued by TECHNE.
G. INSULATION:
R-15 Batt Insulation At All Exterior 2 X 4 Walls.
R-15 Batt Insulation at all accessible interior walls for sound control.
R-30 Batt Insulation at 2 X 10 Ceiling, Raised Floor & Roof Areas.
R-4.5 Insulation Wrap on All New Hot Water Piping.
R-4.5 Insulation Wrap on All New Supply Ducts.

FIELD COPY

DIMENSIONS

- EXTERIOR WALL DIMENSIONS TO FACE OF FINISH (U.N.O.)
- INTERIOR WALL DIMENSIONS TO CENTER LINE OF STUD (U.N.O.)

1. CLEARANCE DIMENSIONS ARE TO FACE OF FINISH MATERIALS, NOTED WITH CLR

TECHNE
DESIGN | DEVELOPMENT
3956 30th Street, San Diego, CA 92104
techne-us.com sustainablearchitect.org
o 619-940-5814 m 313-595-5814

CONSULTANTS

LICENSED ARCHITECT
MICHAEL RENE MORTON
C-19371
REN. 04/30/2015
STATE OF CALIFORNIA

414 29th Avenue
Oakland, CA 94601

OWNER

29th Avenue Group, LLC
1211 Embarcadero Way, Suite D
Oakland, CA 94606

BuildZig
Dream it. Build it. Zig it.

APPROVED
NOT APPROVED
ARCHITECT
ENGINEER
STRUCTURAL
ELECT MECH PLUMB
NOT CHECKED

MARK	DATE	DESCRIPTION
01	11.10.14	1st Building Permit Submittal
02	02.23.15	2nd Building Permit Submittal

3/24/2015 6:26:03 PM

PROJECT NO: 1410
CAD DWG FILE: A301 - BUILDING SECTIONS - PROPOSED.DWG
DRAWN BY: A.S., M.M., J.C., J.S.
CHK'D BY: A.S., M.M

COPYRIGHT: TECHNE expressly reserves its common law copyright and other property rights in this document. This document shall not be reproduced, copied, changed or disclosed in any form or manner whatsoever without first obtaining the express written consent of TECHNE.

SHEET TITLE
BUILDING SECTIONS - PROPOSED

A301

SHEET -- OF 100

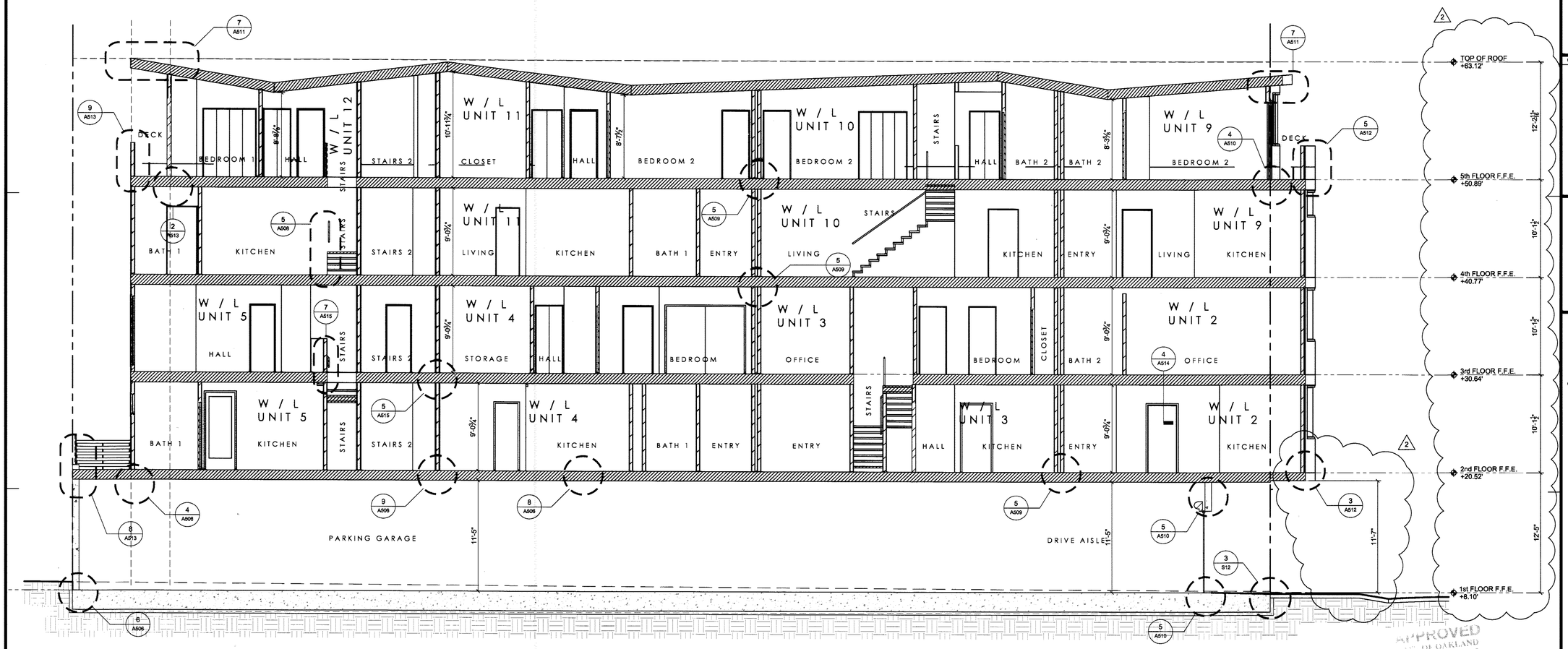

C BUILDING SECTION C
SCALE: 3/16" = 1'-0"

APPROVED
CITY OF OAKLAND
PLANNING AND BUILDING SERVICES
PLANNING & ZONING DIVISION
PROJECT MUST BE IN COMPLIANCE WITH THE OAKLAND PLANNING CODE
THIS PLAN IS NOT A PLANNING APPROVAL
PLANNING CODE
ZONING DISTRICT
PLANNING & ZONING SECTION USE ONLY
PLOT PLAN REVIEW
PARKING/DWY LAYOUT
GRADING AND EROSION CONTROL
SOILS REPORT ON FILE
STRUCT, MECH, PLUMB
NOT CHECKED

SECTION NOTES

A. This Building Section drawing is for general information only.
B. Refer to Structural Engineering drawings for additional information.
C. It is the responsibility of the General Contractor to ensure the proposed structure is designed and built in accordance with all applicable codes and regulations.
D. Written dimensions shall take precedence over scaled dimensions and shall be verified on the job site. On-site verification of all dimensions and conditions shall be the sole responsibility of the General Contractor and Sub-Contractors.
E. The Contractor or sub-contractor shall notify TECHNE if any conflicts or discrepancy occurs between this information on this plan and actual field conditions.
F. Any discrepancies with this drawing affecting project layout shall be brought to the attention of TECHNE. Do not proceed with work until written or verbal instructions are issued by TECHNE.
G. INSULATION:
R-15 Batt Insulation At All Exterior 2 X 4 Walls.
R-15 Batt Insulation at all accessible interior walls for sound control.
R-30 Batt Insulation at 2 X 10 Ceiling, Raised Floor & Roof Areas.
R-4.5 Insulation Wrap on All New Hot Water Piping.
R-4.5 Insulation Wrap on All New Supply Ducts.

DIMENSIONS

- EXTERIOR WALL DIMENSIONS TO FACE OF FINISH (U.N.O.)
- INTERIOR WALL DIMENSIONS TO CENTER LINE OF STUD (U.N.O.)

1. CLEARANCE DIMENSIONS ARE TO FACE OF FINISH MATERIALS, NOTED WITH CLR

FIELD COPY

TECHNE
DESIGN | DEVELOPMENT
3956 30th Street, San Diego, CA 92104
techne-us.com sustainablearchitect.org
o 619-940-5814 m 313-595-5814

CONSULTANTS

LICENSED ARCHITECT
MICHAEL REE MORTON
C-19371
REN. 04/30/2015
STATE OF CALIFORNIA

414 29th Avenue
Oakland, CA 94601

OWNER

29th Avenue Group, LLC
1211 Embarcadero Way, Suite D
Oakland, CA 94606

BuildZig
Dream it. Build it. Zig it.

MARK	DATE	DESCRIPTION
01	11.10.14	1st Building Permit Submittal
02	02.23.15	2nd Building Permit Submittal

2/24/2015 6:33:22 PM

PROJECT NO: 1410
CAD DWG FILE: A301 - BUILDING SECTIONS - PROPOSED.DWG
DRAWN BY: A.S, M.M., J.C., J.S.
CHK'D BY: A.S., M.M

COPYRIGHT: TECHNE expressly reserves its common law copyright and other property rights in this document. This document shall not be reproduced, copied, changed or disclosed in any form or manner whatsoever without first obtaining the express written consent of TECHNE.

SHEET TITLE
BUILDING SECTIONS - PROPOSED

A302

SHEET -- OF 100

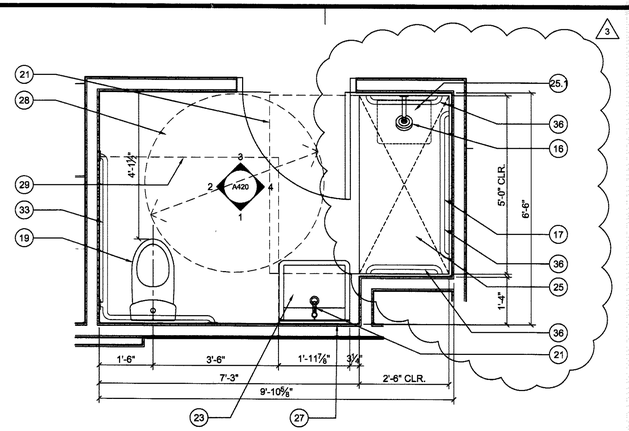

1 BATHROOM PLAN - TYPE "A" (Accessible)
1/2" = 1'-0"

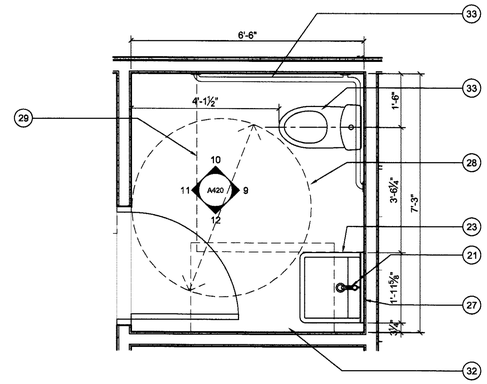

1a BATHROOM PLAN - TYPE "A1" (Accessible)
1/2" = 1'-0"

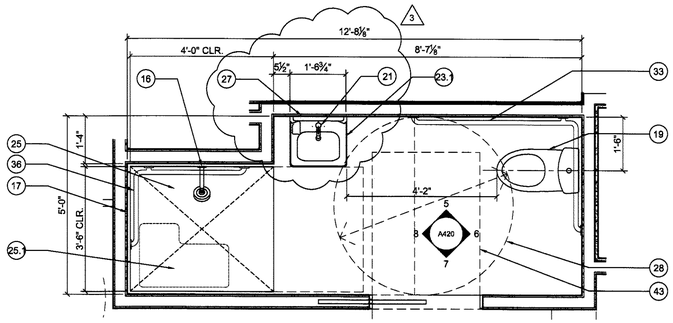

2 BATHROOM PLAN - TYPE "B" (Accessible)
1/2" = 1'-0"

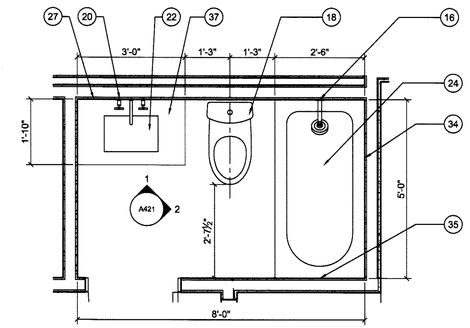

3 BATHROOM PLAN - TYPE "C" (Adaptable)
1/2" = 1'-0"

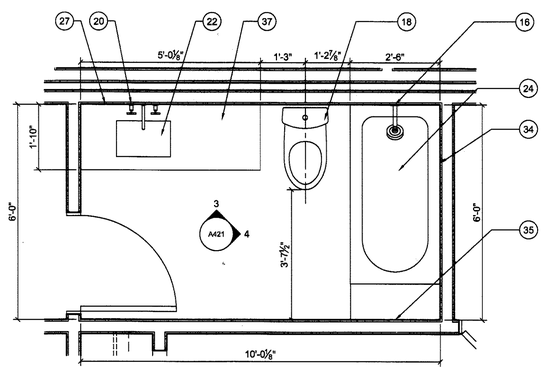

4 BATHROOM PLAN - TYPE "D" 1.1 (Adaptable)
1/2" = 1'-0"

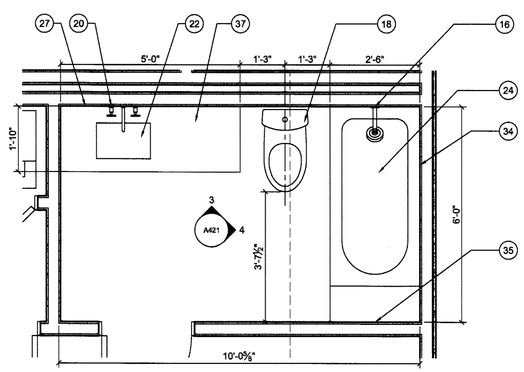

5 BATHROOM PLAN - TYPE "D" 1.2 (Adaptable)
1/2" = 1'-0"

FLOOR PLAN KEYNOTES

ENTRY

1. Every unit shall be provided with a door buzzer, bell, chime or equivalent (CBC 11B2A)
2. Entry door unit signage per detail

KITCHEN REQUIREMENTS

3. 24" KITCHEN SINK WITH GARBAGE DISPOSAL: Owner to select. Kitchen counter top height at 36" A.F.F. (U.N.O.)
4. 30" REFRIGERATOR: Owner to select
5. 24" DISHWASHER: Owner to select
6. 24" RANGE: Owner to select
7. STACKABLE WASHER AND DRYER: Owner to select
8. KITCHEN SINK BASE CABINET: Base cabinets directly under sink shall be removable to provide clearance for wheelchair. provide cabinet sides and extend finished flooring under cabinets to rear wall per CBC sec. 1134A.3.
9. KITCHEN SPACE: Clear width per CBC sec. 1133A.2.1.
10. WORK SPACE: 30" wide kitchen work surface per CBC sec. 1133A.4.
11. REPOSITIONABLE COUNTERTOP: Area designated to meet requirement of 5% of units to provide repositionable kitchen countertop height (to 28" min.) at sink and work space, per CBC sec. 1133A.4.1. Base cabinets directly under sink shall be removable to provide clearance for wheelchair. provide durable, non-absorbent cabinet sides and extend finished flooring under cabinets to rear wall.
12. UPPER CABINETS: Owner to select. Provide 2x blocking at upper cabinet locations.
13. 48" clear space adjacent to range or cook-top including handle.
14. LOWER SHELVING: Kitchens require lower shelving and/or drawer spaces to be provided at a height of not more than 48 inches above the floor, per sec. 1133A.5

BATHROOM
(Owner many substitute with approval from TECHNE)

15. SHOWER HEAD and MIXER - KOHLER Stillness Shower Trim Set
16. SHOWER HEAD, MIXER and DIVERTER - KOHLER Stillness Shower Trim Set and Diverter
17. ADA HAND HELD SHOWER - KOHLER Stillness Handshower kit K-9059
18. TOILET and SEAT - TOTO Aquia® Close Coupled Toilet and seat
19. ADA TOILET and SEAT - TOTO Drake® II 1G™
20. BATHROOM FAUCET - KOHLER Stillness K-942-4 faucet
21. SINGLE HOLE FAUCET - HANSGROHE Metric S 31060001 faucet
22. UNDERMOUNT SINK - TOTO LT191(G) Undermount lavatory
23. ADA WALL MOUNTED SINK - KOHLER Reve K-5027
    23.1. ADA WALL MOUNTED SINK - KOHLER Hudson K-2805
24. BATHTUB - KOHLER K-1946-LA
25. ADA SHOWER TYPE 1 - 30" x 60" clear space. See interior elevations.
    25.1. ADA FOLDING SHOWER SEAT - Bobrick 5191.
26. ADA SHOWER TYPE 2 - 48" X 42" clear space. See interior elevations.
    26.1. ADA FOLDING SHOWER SEAT - Bobrick 517.
27. MIRROR - Owner to select
28. ADA TURNING CIRCLE: 60" diameter per CBC sec. 1127A.2.2
29. ADA TOILET FLOOR SPACE: 48"W X 36"D min. clear per CBC sec. 1134A.7.
30. ADA BATHTUB FLOOR SPACE: 30"W X 48"L min.clear per CBC sec. 1134A.5
31. ADA SHOWER FLOOR SPACE: 30"W X 48"L min. clear at alternative roll-in shower per CBC sec. 1134A.6 & fig. 11A-9K.
32. ADA LAVATORY FLOOR SPACE: 30"W X 48"L min. clear per CBC sec. 1134A.8. Base cabinets directly under sink shall be removable to provide clearance for wheelchair. Provide cabinet sides and extend finished flooring under cabinets to rear wall. Max. height of fixture rim to be 34".
33. TOILET REAR/SIDE WALL GRAB BAR & REINFORCEMENT: Toilet grab bar for accessible bathrooms shall be Bobrick B68137 36" x 54". Provide 2X backing at rear wall 32" to 38" A.F.F.. Extend 40" min. in length behind water closet and 26" min. in front of water closet (6" Min. in height. - Must support 250 lbs. min.), per CBC sec. 1134.7.2. When not adjacent to side wall, provide reinforcement for installation of floor-mounted, fold away or similar alternative grab bar.
34. BATHTUB BACK WALL GRAB BAR REINFORCEMENT: Provide 2x backing at the back wall 6" max. above the bathtub rim, extending to 38" min. in height A.F.F.. Extend horizontally 48" in length, with each end 6" max. from each end wall. (6" min. in height. - must support 250 lbs. min.), per CBC sec. 1134.5.2
35. BATHTUB END WALL GRAB BAR REINFORCEMENT: Provide 2x backing at each end wall 32" to 38" A.F.F. starting at the front face of tub and extending 24" min. toward back wall. (6" min. in ht. - must support 250 lbs. min.), per CBC sec. 1134A.5.2.
36. SHOWER WALL GRAB BAR & REINFORCEMENT: Provide continuous 2x backing at all walls 32" to 38" a.f.f. (6" min. in ht. - must support 250 lbs. min.), per CBC sec. 1134A.6.4. When walls are glass, provide reinforcement for installation of floor-mounted or ceiling-mounted grab bars.
37. BATHROOM COUNTERTOP: Height at 34" A.F.F. Owner to select material.

CLOSET

38. Shelf and pole per owner (U.N.O.)

LINEN

39. Per owner (U.N.O.)

MECHANICAL

40. Typical water heater per MEP
41. Furnace per MEP
42. Main electrical panel per MEP

DOOR

43. PULL SIDE AND PUSH SIDE FRONT APPROACH DOOR CLEARANCE: Per CBC sec. 1126A & fig. 11A-8A.
41. HINGE SIDE PULL SIDE AND PUSH SIDE APPROACH DOOR CLEARANCE: Per CBC sec. 1126A & fig. 11A-8B.
42. LATCH SIDE PULL SIDE AND PUSH SIDE APPROACH DOOR CLEARANCE: Per CBC sec. 1126A & fig. 11A-8C.
43. LATCH SIDE APPROACH POCKET DOOR CLEARANCE: Per CBC sec. 1126A & fig. 11A-8F.
44. ACCESSIBLE DOOR THRESHOLD: Per CBC sec. 1132A.4.

GENERAL REQUIREMENTS

45. LINE OF SOFFIT ABOVE
46. GUARDRAIL AT 42" A.F.F. (U.N.O.)

FIELD COPY

TECHNE
DESIGN | DEVELOPMENT
3956 30th Street, San Diego, CA 92104
techne-us.com sustainablearchitect.org
o 619-940-5814 m 313-595-5814

CONSULTANTS

LICENSED ARCHITECT
MICHAEL RENE MORTON
C-19371
REN. 04/30/2015
STATE OF CALIFORNIA

414 29th Avenue
Oakland, CA 94601

OWNER

29th Avenue Group, LLC
1211 Embarcadero Way, Suite D
Oakland, CA 94606

BuildZig
Dream it. Build it. Zig it.

APPROVED
CITY OF OAKLAND
BUILDING SERVICES
ELEC. MECH. PLUMB.
NOT CHECKED

MARK	DATE	DESCRIPTION
D1	11.10.14	1st Building Permit Submittal
D2	02.23.15	2nd Building Permit Submittal
D3	03.13.15	3rd Building Permit Submittal

3/13/2015 8:48:35 AM

PROJECT NO: 1410
CAD DWG FILE: A401 - ENLARGE BATHROOM PLANS.DWG
DRAWN BY: A.S, M.M., J.C., J.S.
CHK'D BY: A.S., M.M

COPYRIGHT: TECHNE expressly reserves its common law copyright and other property rights in this document. This document shall not be reproduced, copied, changed or disclosed in any form or manner whatsoever, without express written consent of TECHNE.

SHEET TITLE
ENLARGED BATHROOM PLANS

A401

SHEET -- OF 100

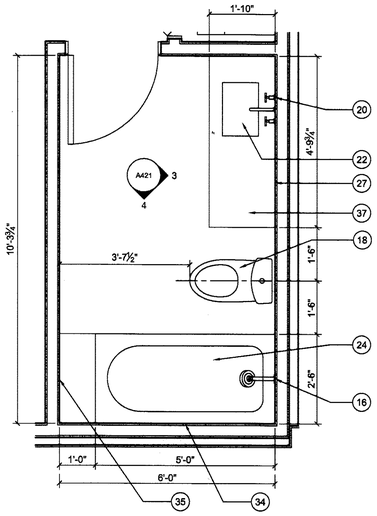

6 BATHROOM PLAN - TYPE "D" 1.3 (Adaptable)
1/2" = 1'-0"

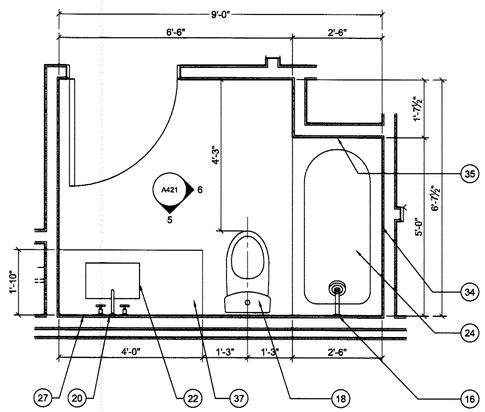

7 BATHROOM PLAN - TYPE "E" (Adaptable)
1/2" = 1'-0"

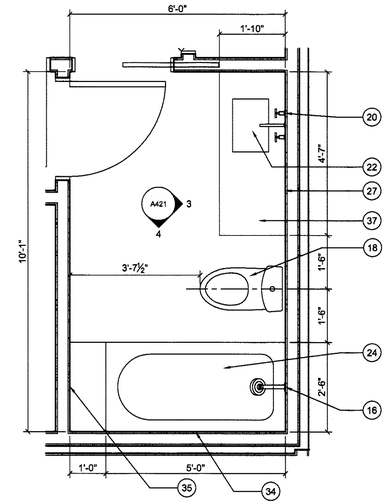

8 BATHROOM PLAN - TYPE "D" 1.5 (Adaptable)
1/2" = 1'-0"

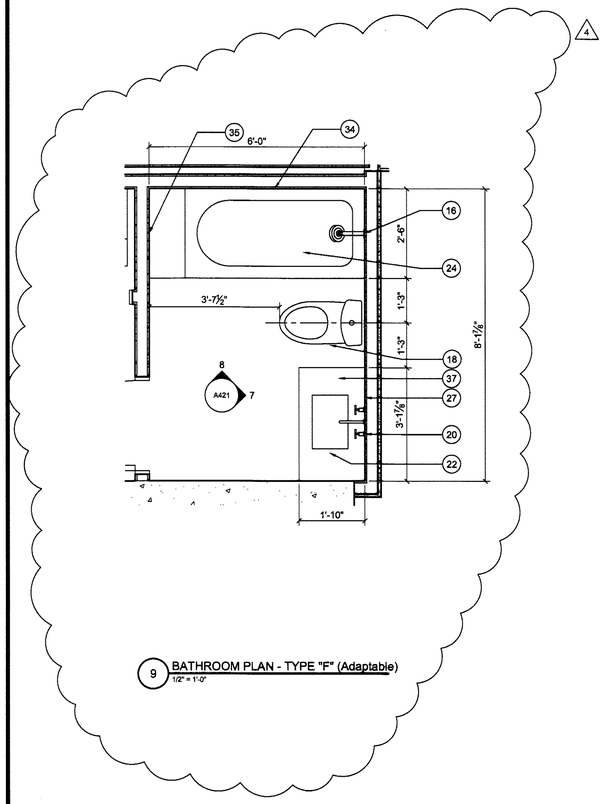

9 BATHROOM PLAN - TYPE "F" (Adaptable)
1/2" = 1'-0"

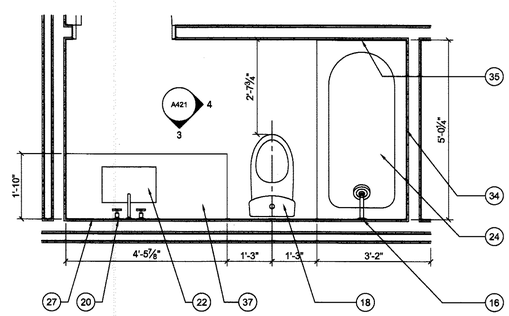

10 BATHROOM PLAN - TYPE "D" 1.6 (Adaptable)
1/2" = 1'-0"

FLOOR PLAN KEYNOTES

ENTRY

1. Every unit shall be provided with a door buzzer, bell, chime or equivalent (CBC 11B2A)
2. Entry door unit signage per detail

KITCHEN REQUIREMENTS

3. 24" KITCHEN SINK WITH GARBAGE DISPOSAL: Owner to select. Kitchen counter top height at 36" A.F.F. (U.N.O.)
4. 30" REFRIGERATOR: Owner to select
5. 24" DISHWASHER: Owner to select
6. 24" RANGE: Owner to select
7. STACKABLE WASHER AND DRYER: Owner to select
8. KITCHEN SINK BASE CABINET: Base cabinets directly under sink shall be removable to provide clearance for wheelchair. provide cabinet sides and extend finished flooring under cabinets to rear wall per CBC sec. 1134A.3.
9. KITCHEN SPACE: Clear width per CBC sec. 1133A.2.1.
10. WORK SPACE: 30" wide kitchen work surface per CBC sec. 1133A.4.
11. REPOSITIONABLE COUNTERTOP: Area designated to meet requirement of 5% of units to provide repositionable kitchen countertop height (to 28" min.) at sink and work space, per CBC sec. 1133A.4.1. Base cabinets directly under sink shall be removable to provide clearance for wheelchair. provide durable, non-absorbent cabinet sides and extend finished flooring under cabinets to rear wall.
12. UPPER CABINETS: Owner to select. Provide 2x blocking at upper cabinet locations.
13. 48" clear space adjacent to range or cook-top including handle.
14. LOWER SHELVING: Kitchens require lower shelving and/or drawer spaces to be provided at a height of not more than 48 inches above the floor, per sec. 1133A.5

BATHROOM

(Owner many substitute with approval from TECHNE)

15.	SHOWER HEAD and MIXER	- KOHLER Stillness Shower Trim Set
16.	SHOWER HEAD, MIXER and DIVERTER	- KOHLER Stillness Shower Trim Set and Diverter
17.	ADA HAND HELD SHOWER	- KOHLER Stilness Handshower kit K-9059
18.	TOILET and SEAT	- TOTO Aquia® Close Coupled Toilet and seat
19.	ADA TOILET and SEAT	- TOTO Drake® II 1G™
20.	BATHROOM FAUCET	- KOHLER Stillness K-942-4 faucet
21.	SINGLE HOLE FAUCET	- HANSGROHE Metric S 31060001 faucet
22.	UNDERMOUNT SINK	- TOTO LT191(G) Undermount lavatory
23.	ADA WALL MOUNTED SINK	- KOHLER Reve K-5027
23.1.	ADA WALL MOUNTED SINK	- KOHLER Hudson K-2805
24.	BATHTUB	- KOHLER K-1946-LA
25.	ADA SHOWER TYPE 1	- 30" x 60" clear space. See interior elevations.
25.1.	ADA FOLDING SHOWER SEAT	- Bobrick 5191.
26.	ADA SHOWER TYPE 2	- 48" X 42" clear space. See interior elevations.
26.1.	ADA FOLDING SHOWER SEAT	- Bobrick 517.
27.	MIRROR	- Owner to select

28. ADA TURNING CIRCLE: 60" diameter per CBC sec. 1127A.2.2
29. ADA TOILET FLOOR SPACE: 48"W X 36"D min. clear per CBC sec. 1134A.7.
30. ADA BATHTUB FLOOR SPACE: 30"W X 48"L min.clear per CBC sec. 1134A.5
31. ADA SHOWER FLOOR SPACE: 30"W X 48"L min. clear at alternative roll-in shower per CBC sec. 1134A.6 & fig. 11A-9K.
32. ADA LAVATORY FLOOR SPACE: 30"W X 48"L min. clear per CBC sec. 1134A.8. Base cabinets directly under sink shall be removable to provide clearance for wheelchair. Provide cabinet sides and extend finished flooring under cabinets to rear wall. Max. height of fixture rim to be 34".
33. TOILET REAR/SIDE WALL GRAB BAR & REINFORCEMENT: Toilet grab bar for accessible bathrooms shall be Bobrick B68137 36" x 54". Provide 2X backing at rear wall 32" to 38" A.F.F.. Extend 40" min. in length behind water closet and 26" min. in front of water closet (6" Min. in height. - Must support 250 lbs. min.), per CBC sec. 1134.7.2. When not adjacent to side wall, provide reinforcement for installation of floor-mounted, fold away or similar alternative grab bar.
34. BATHTUB BACK WALL GRAB BAR REINFORCEMENT: Provide 2x backing at the back wall 6" max. above the bathtub rim, extending to 38" min. in height A.F.F.. Extend horizontally 48" in length, with each end 6" max. from each end wall. (6" min. in height. - must support 250 lbs. min.), per CBC sec. 1134.5.2
35. BATHTUB END WALL GRAB BAR REINFORCEMENT: Provide 2x backing at each end wall 32" to 38" A.F.F. starting at the front face of tub and extending 24" min. toward back wall. (6" min. in ht. - must support 250 lbs. min.), per CBC sec. 1134A.5.2.
36. SHOWER WALL GRAB BAR & REINFORCEMENT: Provide continuous 2x backing at all walls 32" to 38" a.f.f. (6" min. in ht. - must support 250 lbs. min.), per CBC sec. 1134A.6.4. When walls are glass, provide reinforcement for installation of floor-mounted or ceiling-mounted grab bars.
37. BATHROOM COUNTERTOP: Height at 34" A.F.F. Owner to select material.

CLOSET

38. Shelf and pole per owner (U.N.O.)

LINEN

39. Per owner (U.N.O.)

MECHANICAL

40. Typical water heater per MEP
41. Furnace per MEP
42. Main electrical panel per MEP

DOOR

43. PULL SIDE AND PUSH SIDE FRONT APPROACH DOOR CLEARANCE: Per CBC sec. 1126A & fig. 11A-8A.
41. HINGE SIDE PULL SIDE AND PUSH SIDE APPROACH DOOR CLEARANCE: Per CBC sec. 1126A & fig. 11A-8B.
42. LATCH SIDE PULL SIDE AND PUSH SIDE APPROACH DOOR CLEARANCE: Per CBC sec. 1126A & fig. 11A-8C.
43. LATCH SIDE APPROACH POCKET DOOR CLEARANCE: Per CBC sec. 1126A & fig. 11A-8F.
44. ACCESSIBLE DOOR THRESHOLD: Per CBC sec. 1132A.4.

GENERAL REQUIREMENTS

45. LINE OF SOFFIT ABOVE
46. GUARDRAIL AT 42" A.F.F. (U.N.O.)

FIELD COPY

TECHNE
DESIGN | DEVELOPMENT
3956 30th Street, San Diego, CA 92104
techne-us.com sustainablearchitect.org
o 619-940-5814 m 313-595-5814

CONSULTANTS

LICENSED ARCHITECT
MICHAEL RENE MORTON
C-19371
REN. 04/30/2015
STATE OF CALIFORNIA

414 29th Avenue
Oakland, CA 94601

OWNER

29th Avenue Group, LLC
1211 Embarcadero Way, Suite D
Oakland, CA 94606

BuildZig
Dream it. Build it. Zig it.

APPROVED
CITY OF OAKLAND
BUILDING SERVICES
NOT CHECKED

MARK	DATE	DESCRIPTION
01	11.10.14	1st Building Permit Submittal
02	02.23.15	2nd Building Permit Submittal
03	03.13.15	3rd Building Permit Submittal
04	04.02.15	Elevator Revision

4/1/2015 4:14:12 PM

PROJECT NO: 1410
CAD DWG FILE: A401 - ENLARGE BATHROOM PLANS.DWG
DRAWN BY: A.S, M.M., J.C., J.S.
CHK'D BY: A.S., M.M

COPYRIGHT: TECHNE expressly reserves its common law copyright and other property rights in this document. This document shall not be reproduced, copied, changed or disclosed in any form or manner whatsoever without first obtaining the express written consent of TECHNE.

SHEET TITLE
ENLARGED BATHROOM PLANS

A402
SHEET -- OF 100

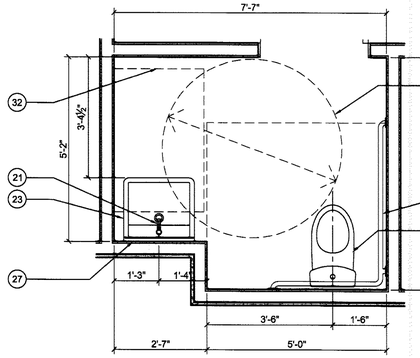

13 BATHROOM PLAN - TYPE "G" (Accessible)
1/2" = 1'-0"

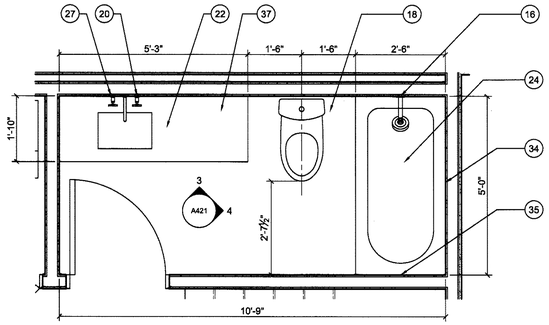

11 BATHROOM PLAN - TYPE "D" 1.7 (Adaptable)
1/2" = 1'-0"

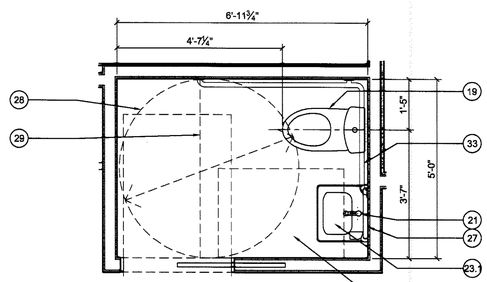

14 BATHROOM PLAN - TYPE "H" (Accessible - Residential Only)
1/2" = 1'-0"

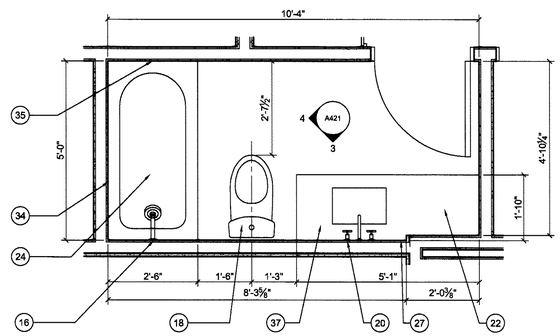

12 BATHROOM PLAN - TYPE "D" 2 (Adaptable)
1/2" = 1'-0"

FLOOR PLAN KEYNOTES

ENTRY

1. Every unit shall be provided with a door buzzer, bell, chime or equivalent (CBC 11B2A)
2. Entry door unit signage per detail

KITCHEN REQUIREMENTS

3. 24" KITCHEN SINK WITH GARBAGE DISPOSAL: Owner to select. Kitchen counter top height at 36" A.F.F. (U.N.O.)
4. 30" REFRIGERATOR: Owner to select
5. 24" DISHWASHER: Owner to select
6. 24" RANGE: Owner to select
7. STACKABLE WASHER AND DRYER: Owner to select
8. KITCHEN SINK BASE CABINET: Base cabinets directly under sink shall be removable to provide clearance for wheelchair. provide cabinet sides and extend finished flooring under cabinets to rear wall per CBC sec. 1134A.3.
9. KITCHEN SPACE: Clear width per CBC sec. 1133A.2.1.
10. WORK SPACE: 30" wide kitchen work surface per CBC sec. 1133A.4.
11. REPOSITIONABLE COUNTERTOP: Area designated to meet requirement of 5% of units to provide repositionable kitchen countertop height (to 28" min.) at sink and work space, per CBC sec. 1133A.4.1. Base cabinets directly under sink shall be removable to provide clearance for wheelchair. provide durable, non-absorbent cabinet sides and extend finished flooring under cabinets to rear wall.
12. UPPER CABINETS: Owner to select. Provide 2x blocking at upper cabinet locations.
13. 48" clear space adjacent to range or cook-top including handle.
14. LOWER SHELVING: Kitchens require lower shelving and/or drawer spaces to be provided at a height of not more than 48 inches above the floor, per sec. 1133A.5

BATHROOM

(Owner many substitute with approval from TECHNE)

15. SHOWER HEAD and MIXER - KOHLER Stillness Shower Trim Set
16. SHOWER HEAD, MIXER and DIVERTER - KOHLER Stillness Shower Trim Set and Diverter
17. ADA HAND HELD SHOWER - KOHLER Stillness Handshower kit K-9059
18. TOILET and SEAT - TOTO Aquia® Close Coupled Toilet and seat
19. ADA TOILET and SEAT - TOTO Drake® II 1G™
20. BATHROOM FAUCET - KOHLER Stillness K-942-4 faucet
21. SINGLE HOLE FAUCET - HANSGROHE Metric S 31060001 faucet
22. UNDERMOUNT SINK - TOTO LT191(G) Undermount lavatory
23. ADA WALL MOUNTED SINK - KOHLER Reve K-5027
    23.1. ADA WALL MOUNTED SINK - KOHLER Hudson K-2805
24. BATHTUB - KOHLER K-1946-LA
25. ADA SHOWER TYPE 1 - 30" x 60" clear space. See interior elevations.
    25.1. ADA FOLDING SHOWER SEAT - Bobrick 5191.
26. ADA SHOWER TYPE 2 - 48" X 42" clear space. See interior elevations.
    26.1. ADA FOLDING SHOWER SEAT - Bobrick 517.
27. MIRROR - Owner to select
28. ADA TURNING CIRCLE: 60" diameter per CBC sec. 1127A.2.2
29. ADA TOILET FLOOR SPACE: 48"W X 36"D min. clear per CBC sec. 1134A.7.
30. ADA BATHTUB FLOOR SPACE: 30"W X 48"L min.clear per CBC sec. 1134A.5
31. ADA SHOWER FLOOR SPACE: 30"W X 48"L min. clear at alternative roll-in shower per CBC sec. 1134A.6 & fig. 11A-9K.
32. ADA LAVATORY FLOOR SPACE: 30"W X 48"L min. clear per CBC sec. 1134A.8. Base cabinets directly under sink shall be removable to provide clearance for wheelchair. Provide cabinet sides and extend finished flooring under cabinets to rear wall. Max. height of fixture rim to be 34".
33. TOILET REAR/SIDE WALL GRAB BAR & REINFORCEMENT: Toilet grab bar for accessible bathrooms shall be Bobrick B68137 36" x 54". Provide 2X backing at rear wall 32" to 38" A.F.F.. Extend 40" min. in length behind water closet and 26" min. in front of water closet (6" Min. in height. - Must support 250 lbs. min.), per CBC sec. 1134.7.2. When not adjacent to side wall, provide reinforcement for installation of floor-mounted, fold away or similar alternative grab bar.
34. BATHTUB BACK WALL GRAB BAR REINFORCEMENT: Provide 2x backing at the back wall 6" max. above the bathtub rim, extending to 38" min. in height A.F.F.. Extend horizontally 48" in length, with each end 6" max. from each end wall. (6" min. in height. - must support 250 lbs. min.), per CBC sec. 1134.5.2
35. BATHTUB END WALL GRAB BAR REINFORCEMENT: Provide 2x backing at each end wall 32" to 38" A.F.F. starting at the front face of tub and extending 24" min. toward back wall. (6" min. in ht. - must support 250 lbs. min.), per CBC sec. 1134A.5.2.
36. SHOWER WALL GRAB BAR & REINFORCEMENT: Provide continuous 2x backing at all walls 32" to 38" a.f.f. (6" min. in ht. - must support 250 lbs. min.), per CBC sec. 1134A.6.4. When walls are glass, provide reinforcement for installation of floor-mounted or ceiling-mounted grab bars.
37. BATHROOM COUNTERTOP: Height at 34" A.F.F. Owner to select material.

CLOSET

38. Shelf and pole per owner (U.N.O.)

LINEN

39. Per owner (U.N.O.)

MECHANICAL

40. Typical water heater per MEP
41. Furnace per MEP
42. Main electrical panel per MEP

DOOR

43. PULL SIDE AND PUSH SIDE FRONT APPROACH DOOR CLEARANCE: Per CBC sec. 1126A & fig. 11A-8A.
41. HINGE SIDE PULL SIDE AND PUSH SIDE APPROACH DOOR CLEARANCE: Per CBC sec. 1126A & fig. 11A-8B.
42. LATCH SIDE PULL SIDE AND PUSH SIDE APPROACH DOOR CLEARANCE: Per CBC sec. 1126A & fig. 11A-8C.
43. LATCH SIDE APPROACH POCKET DOOR CLEARANCE: Per CBC sec. 1126A & fig. 11A-8F.
44. ACCESSIBLE DOOR THRESHOLD: Per CBC sec. 1132A.4.

GENERAL REQUIREMENTS

45. LINE OF SOFFIT ABOVE
46. GUARDRAIL AT 42" A.F.F. (U.N.O.)

FIELD COPY

TECHNE
DESIGN | DEVELOPMENT
3956 30th Street, San Diego, CA 92104
techne-us.com sustainablearchitect.org
o 619-940-5814 m 313-595-5814

CONSULTANTS

LICENSED ARCHITECT
MICHAEL RENE MORTON
C-19371
REN. 04/30/2015
STATE OF CALIFORNIA

414 29th Avenue
Oakland, CA 94601

OWNER

29th Avenue Group, LLC
1211 Embarcadero Way, Suite D
Oakland, CA 94606

BuildZig
Dream it. Build it. Zig it.

APPROVED
CITY OF OAKLAND
BUILDING SERVICES
REPORT ON FILE
ELECT. MECH. PLUMB.
NOT CHECKED

MARK	DATE	DESCRIPTION
01	11.10.14	1st Building Permit Submittal
02	02.23.15	2nd Building Permit Submittal
03	03.13.15	3rd Building Permit Submittal
04	04.02.15	Elevator Revision

4/1/2015 4:14:12 PM

PROJECT NO: 1410
CAD DWG FILE: A401 - ENLARGE BATHROOM PLANS.DWG
DRAWN BY: A.S, M.M., J.C., J.S.
CHK'D BY: A.S., M.M

COPYRIGHT: TECHNE expressly reserves its common law copyright and other property rights in this document. This document shall not be reproduced, copied, changed or disclosed in any form or manner whatsoever without first obtaining the express written consent of TECHNE.

SHEET TITLE
ENLARGED BATHROOM PLANS

A403

SHEET -- OF 100

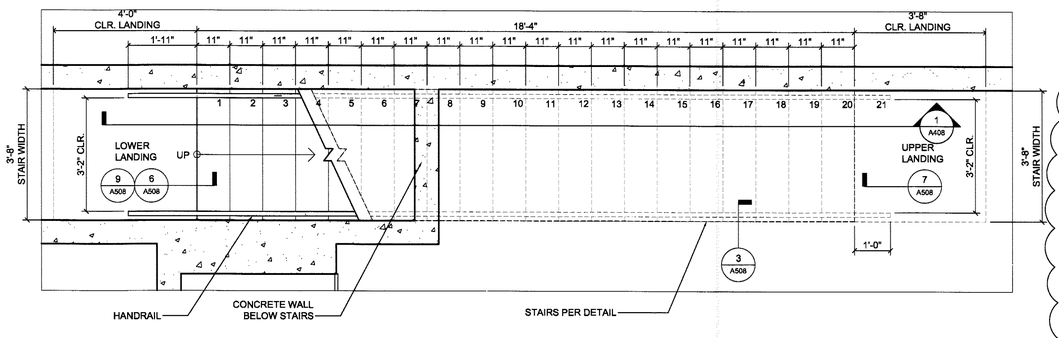

1 NEW STAIR FROM FIRST FLOOR TO SECOND FLOOR
RISE: 6 15/16", RUN: 11"

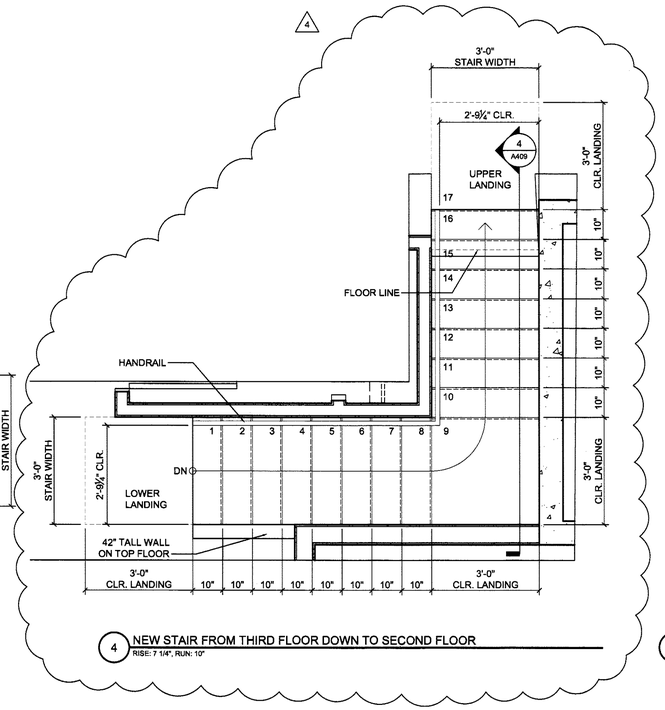

4 NEW STAIR FROM THIRD FLOOR DOWN TO SECOND FLOOR
RISE: 7 1/4", RUN: 10"

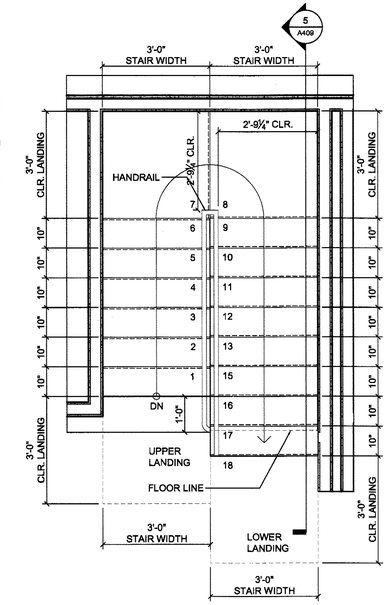

5 NEW STAIR FROM THIRD FLOOR DOWN TO SECOND FLOOR
RISE: 7 1/4", RUN: 10"

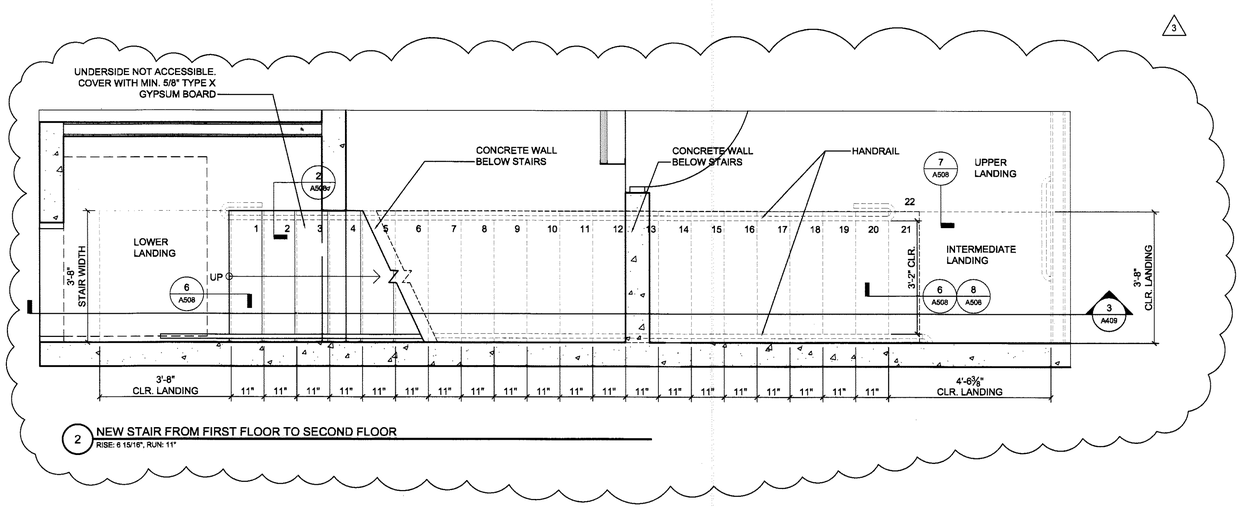

2 NEW STAIR FROM FIRST FLOOR TO SECOND FLOOR
RISE: 6 15/16", RUN: 11"

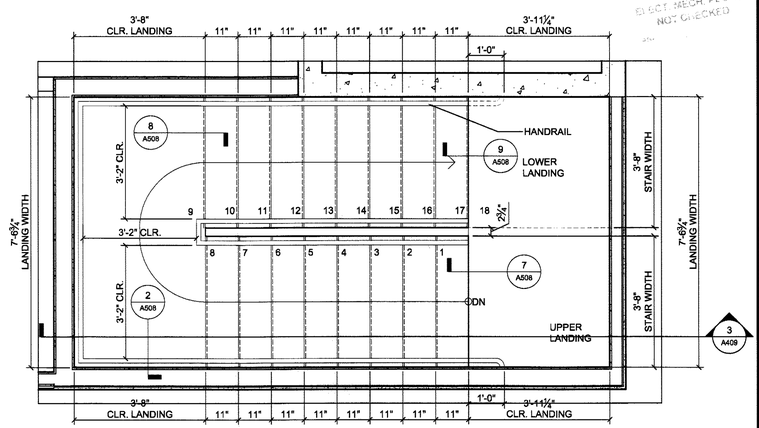

3 NEW STAIR FROM THIRD FLOOR DOWN TO SECOND FLOOR
RISE: 6 27/32", RUN: 11"

APPROVED
CITY OF OAKLAND
BUILDING SERVICES
ELECT, MECH, PLUMB
NOT CHECKED

FIELD COPY

TECHNE
DESIGN | DEVELOPMENT
3956 30th Street, San Diego, CA 92104
techne-us.com sustainablearchitect.org
o 619-940-5814 m 313-595-5814

CONSULTANTS

LICENSED ARCHITECT
MICHAEL RENE MORTON
C-19371
REN. 04/30/2015
STATE OF CALIFORNIA

414 29th Avenue
Oakland, CA 94601

OWNER

29th Avenue Group, LLC
1211 Embarcadero Way, Suite D
Oakland, CA 94606

BuildZig
Dream it. Build it. Zig it.

MARK	DATE	DESCRIPTION
01	11.10.14	1st Building Permit Submittal
02	02.23.15	2nd Building Permit Submittal
03	03.13.15	3rd Building Permit Submittal
04	04.02.15	Elevator Revision

4/1/2015 4:26:02 PM

PROJECT NO: 1410
CAD DWG FILE: A404 - ENLARGED STAIR PLANS.DWG
DRAWN BY: A.S., M.M., J.C., J.S.
CHK'D BY: A.S., M.M

COPYRIGHT: TECHNE expressly reserves its common law copyright and other property rights in this document. This document shall not be reproduced, copied, changed or disclosed in any form or manner whatsoever without first obtaining the express written consent of TECHNE.

SHEET TITLE
ENLARGED STAIR PLANS

A404

SHEET -- OF 100

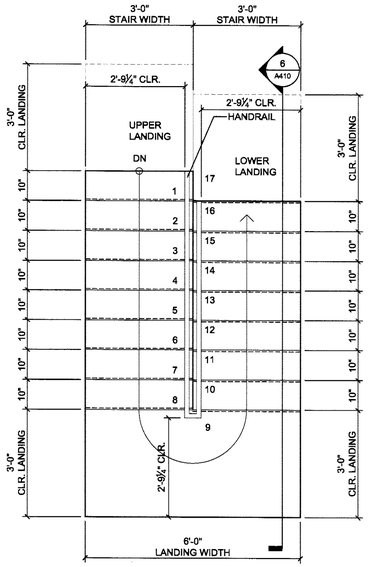

6 NEW STAIR FROM THIRD FLOOR DOWN TO SECOND FLOOR
RISE: 7 1/4", RUN: 10"

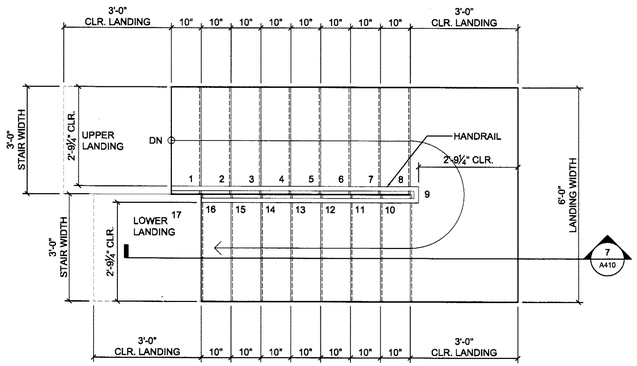

7 NEW STAIR FROM THIRD FLOOR DOWN TO SECOND FLOOR
Rise: 7 1/4", Run: 10"

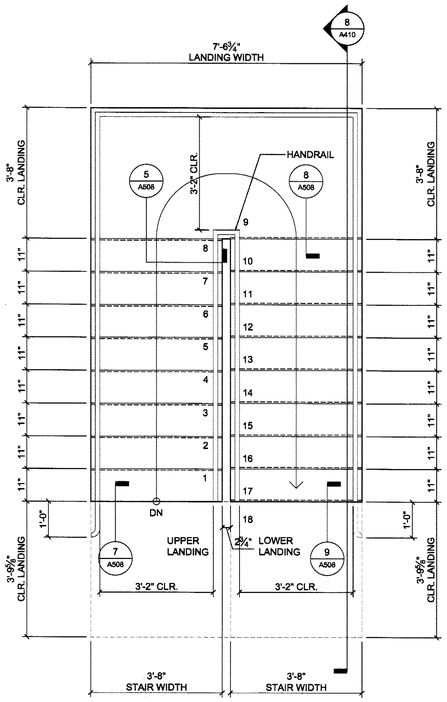

8 NEW STAIR FROM THIRD FLOOR DOWN TO SECOND FLOOR
RISE: 8 27/32", RUN: 11"

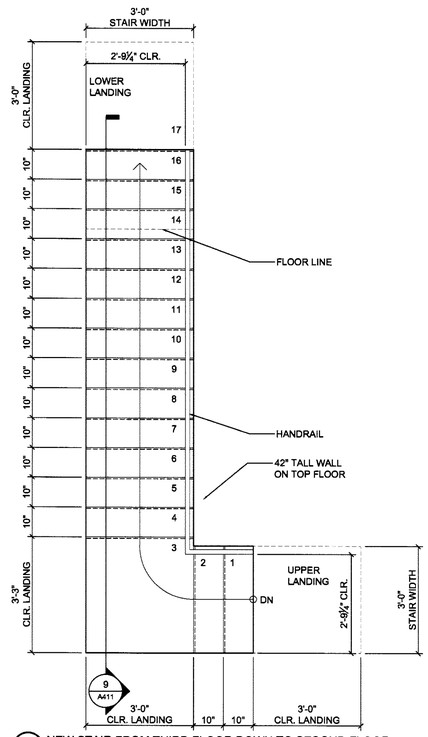

9 NEW STAIR FROM THIRD FLOOR DOWN TO SECOND FLOOR
RISE: 8 27/32", RUN: 11"

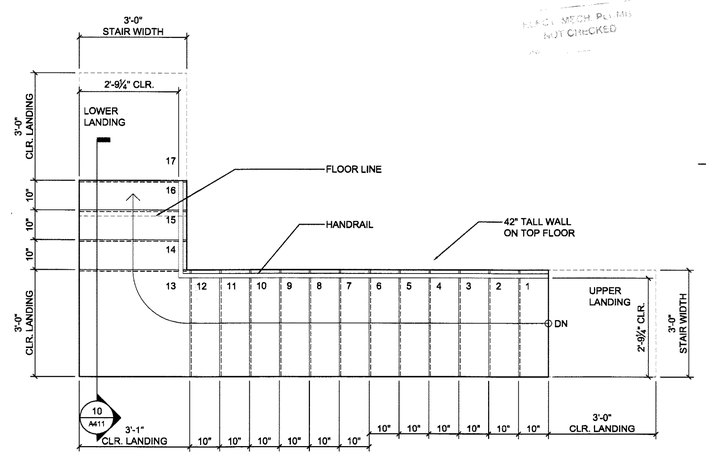

10 NEW STAIR FROM THIRD FLOOR DOWN TO SECOND FLOOR
Riser: 7 1/4", Run: 10"

APPROVED
CITY OF OAKLAND
BUILDING SERVICES
NOT CHECKED

FIELD COPY

STAIR NOTES

1. All new stairs shall comply with the latest adopted version of the California Building Code.
2. Stair treads and risers shall comply with CBC 2013 Sections 1009.7.1 through 1009.7.5.3.
3. In Group R-3 occupancies; within dwelling units in Group R-2 occupancies; and in Group U occupancies that are accessory to a Group R-3 occupancy or accessory to individual dwelling units in Group R-2 occupancies; the maximum riser height shall be 7¾" inches (197 mm); the minimum tread depth shall be 10 inches (254 mm); the minimum winder tread depth at the walkline shall be 10 inches (254 mm); and the minimum winder tread depth shall be 6 inches (152 mm). A nosing projection not less than ¾ inch (19.1 mm) but not more than 1¼ inches (32 mm) shall be provided on stairways with solid risers where the tread depth is less than 11 inches (279 mm).
4. Dimensional uniformity. Stair treads and risers shall be of uniform size and shape. The tolerance between the largest and smallest riser height or between the largest and smallest tread depth shall not exceed 3/8 inch (9.5 mm) in any flight of stairs. The greatest winder tread depth at the walkline within any flight of stairs shall not exceed the smallest by more than ⅜ inch (9.5 mm).
5. Stairway landings. There shall be a floor or landing at the top and bottom of each stairway. The width of landings shall not be less than the width of stairways they serve. Every landing shall have a minimum width measured perpendicular to the direction of travel equal to the width of the stairway. Where the stairway has a straight run the depth need not exceed 48 inches (1219 mm). Doors opening onto a landing shall not reduce the landing to less than one-half the required width. When fully open, the door shall not project more than 7 inches (178 mm) into a landing.
6. Outdoor conditions. Outdoor stairways and outdoor approaches to stairways shall be designed so that water will not accumulate on walking surfaces.
7. Enclosures under interior stairways. The walls and soffits within enclosed usable spaces under enclosed and unenclosed stairways shall be protected by I-hour fire-resistance-rated construction or the fire-resistance rating of the stairway enclosure, whichever is greater. Access to the enclosed space shall not be directly from within the stair enclosure.
   - 7.1. Exception: Spaces under stairways serving and contained within a single residential dwelling unit in Group R-2 or R-3 shall be permitted to be protected on the enclosed side with 1/2-inch (12.7 mm) gypsum board.
8. Handrails. Stairways shall have handrails on each side and shall comply with Section 1012. Where glass is used to provide the handrail, the handrail shall also comply with Section 2407.
   - 8.1. Exception: Stairways within dwelling units and spiral stairways are permitted to have a handrail on one side only.
9. Handrail Height. Handrail height, measured above stair tread nosings, or finish surface of ramp slope, shall be uniform, not less than 34 inches (864 mm) and not more than 38 inches (965 mm).
10. Headroom. Stairways shall have a minimum headroom clearance of 80 inches (2032 mm) measured vertically from a line connecting the edge of the nosings. Such headroom shall be continuous above the stairway to the point where the line intersects the landing below, one tread depth beyond the bottom riser. The minimum clearance shall be maintained the full width of the stairway and landing.
11. Guards. Guards shall be located along open sided walking surfaces, including mezzanines, equipment platforms, stairs, ramps and landings that are located more than 30 inches (762 mm) measured vertically to the floor or grade below at any point within 36 inches (914 mm) horizontally to the edge of the open side. Guards shall be adequate in strength and attachment in accordance with CBC 2013 Section 1607.8.
    - 11.1. Height. Required guards shall not be less than 42 inches (1067 mm) high, measured vertically as follows:
      - 11.1.a. From the adjacent walking surfaces;
      - 11.1.b. On stairs, from the line connecting the leading edges of the tread nosings; and
      - 11.1.c. On ramps, from the ramp surface at the guard.

TECHNE
DESIGN | DEVELOPMENT
3956 30th Street, San Diego, CA 92104
techne-us.com sustainablearchitect.org
o 619-940-5814 m 313-595-5814

CONSULTANTS

LICENSED ARCHITECT
MICHAEL RENE MORTON
C-19371
REN. 04/30/2015
STATE OF CALIFORNIA

414 29th Avenue
Oakland, CA 94601

OWNER

29th Avenue Group, LLC
1211 Embarcadero Way, Suite D
Oakland, CA 94606

BuildZig
Dream it. Build it. Zig it.

MARK	DATE	DESCRIPTION
01	11.10.14	1st Building Permit Submittal
02	02.23.15	2nd Building Permit Submittal

2/24/2015 2:18:55 PM

PROJECT NO: 1410
CAD DWG FILE: A404 - ENLARGED STAIR PLANS-A.DWG
DRAWN BY: A.S, M.M., J.C., J.S.
CHK'D BY: A.S., M.M

COPYRIGHT: TECHNE expressly reserves its common law copyright and other property rights in this document. This document shall not be reproduced, copied, changed or disclosed in any form or manner whatsoever without first obtaining the express written consent of TECHNE.

SHEET TITLE
ENLARGED STAIR PLANS

A405

SHEET -- OF 100

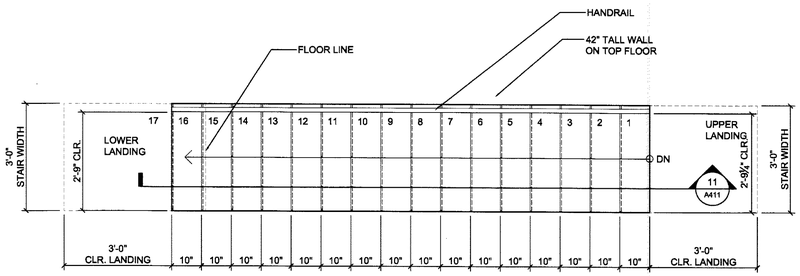

11 NEW STAIR FROM THIRD FLOOR DOWN TO SECOND FLOOR
Riser: 7 1/4", Run: 10"

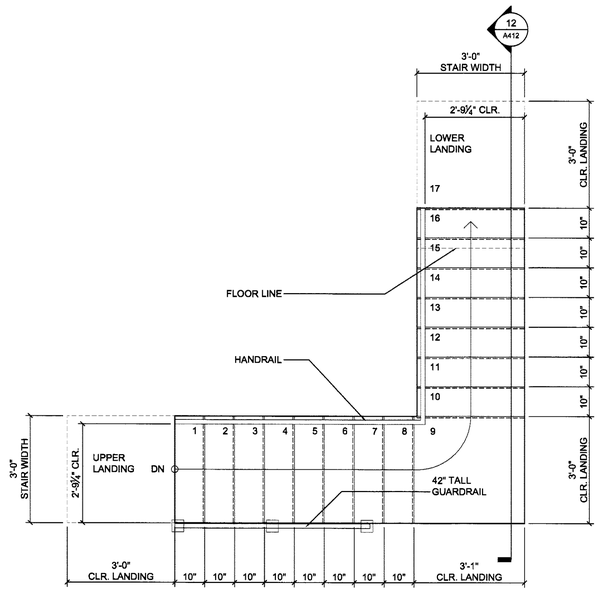

12 NEW STAIR FROM FIFTH FLOOR DOWN TO FOURTH FLOOR
Riser: 7 1/4", Run: 10"

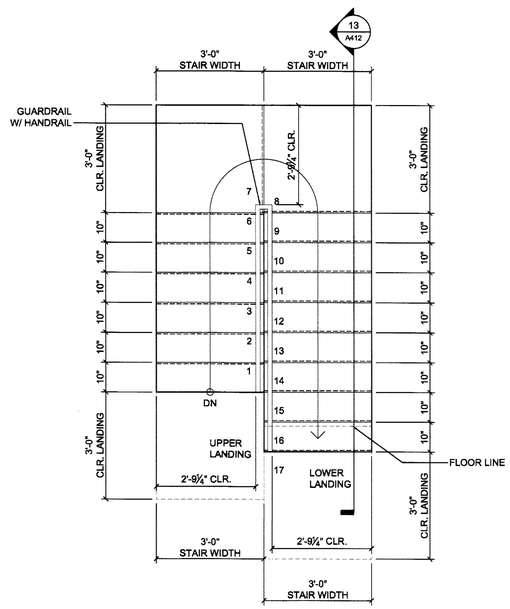

13 NEW STAIR FROM FIFTH FLOOR DOWN TO FOURTH FLOOR
RISE: 7 1/4", RUN: 10"

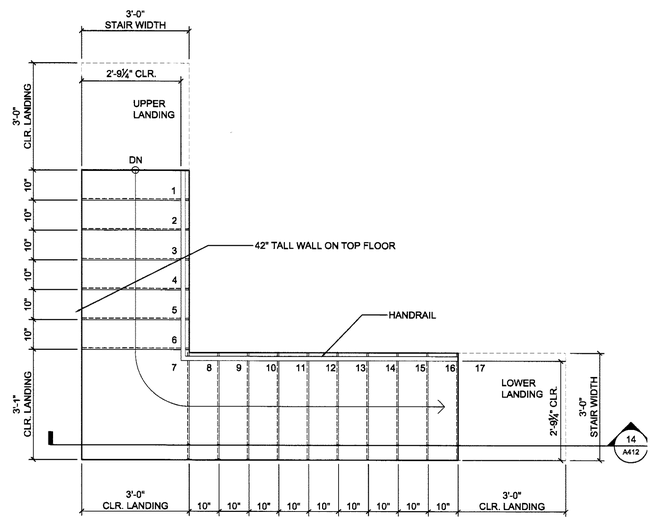

14 NEW STAIR FROM FIFTH FLOOR DOWN TO FOURTH FLOOR
Riser: 7 1/4", Run: 10"

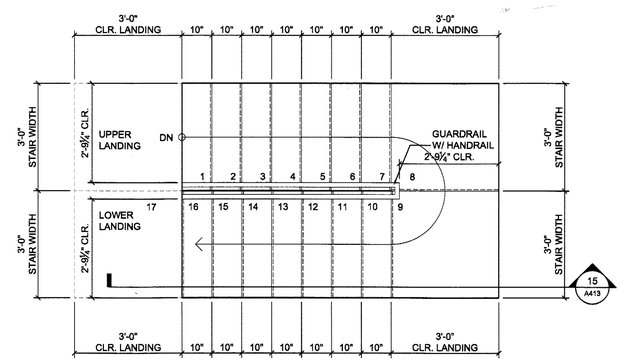

15 NEW STAIR FROM FIFTH FLOOR DOWN TO FOURTH FLOOR
Riser: 7 1/4", Run: 10"

APPROVED
CITY OF OAKLAND
BUILDING SERVICES
ELECT., MECH., PLUMB.
NOT CHECKED

FIELD COPY

STAIR NOTES

1. All new stairs shall comply with the latest adopted version of the California Building Code.
2. Stair treads and risers shall comply with CBC 2013 Sections 1009.7.1 through 1009.7.5.3.
3. In Group R-3 occupancies; within dwelling units in Group R-2 occupancies; and in Group U occupancies that are accessory to a Group R-3 occupancy or accessory to individual dwelling units in Group R-2 occupancies; the maximum riser height shall be 7¾" inches (197 mm); the minimum tread depth shall be 10 inches (254 mm); the minimum winder tread depth at the walkline shall be 10 inches (254 mm); and the minimum winder tread depth shall be 6 inches (152 mm). A nosing projection not less than ¾ inch (19.1 mm) but not more than 1¼ inches (32 mm) shall be provided on stairways with solid risers where the tread depth is less than 11 inches (279 mm).
4. Dimensional uniformity. Stair treads and risers shall be of uniform size and shape. The tolerance between the largest and smallest riser height or between the largest and smallest tread depth shall not exceed 3/8 inch (9.5 mm) in any flight of stairs. The greatest winder tread depth at the walkline within any flight of stairs shall not exceed the smallest by more than ⅜ inch (9.5 mm).
5. Stairway landings. There shall be a floor or landing at the top and bottom of each stairway. The width of landings shall not be less than the width of stairways they serve. Every landing shall have a minimum width measured perpendicular to the direction of travel equal to the width of the stairway. Where the stairway has a straight run the depth need not exceed 48 inches (1219 mm). Doors opening onto a landing shall not reduce the landing to less than one-half the required width. When fully open, the door shall not project more than 7 inches (178 mm) into a landing.
6. Outdoor conditions. Outdoor stairways and outdoor approaches to stairways shall be designed so that water will not accumulate on walking surfaces.
7. Enclosures under interior stairways. The walls and soffits within enclosed usable spaces under enclosed and unenclosed stairways shall be protected by I-hour fire-resistance-rated construction or the fire-resistance rating of the stairway enclosure, whichever is greater. Access to the enclosed space shall not be directly from within the stair enclosure.
   - 7.1. Exception: Spaces under stairways serving and contained within a single residential dwelling unit in Group R-2 or R-3 shall be permitted to be protected on the enclosed side with 1/2-inch (12.7 mm) gypsum board.
8. Handrails. Stairways shall have handrails on each side and shall comply with Section 1012. Where glass is used to provide the handrail, the handrail shall also comply with Section 2407.
   - 8.1. Exception: Stairways within dwelling units and spiral stairways are permitted to have a handrail on one side only.
9. Handrail Height. Handrail height, measured above stair tread nosings, or finish surface of ramp slope, shall be uniform, not less than 34 inches (864 mm) and not more than 38 inches (965 mm).
10. Headroom. Stairways shall have a minimum headroom clearance of 80 inches (2032 mm) measured vertically from a line connecting the edge of the nosings. Such headroom shall be continuous above the stairway to the point where the line intersects the landing below, one tread depth beyond the bottom riser. The minimum clearance shall be maintained the full width of the stairway and landing.
11. Guards. Guards shall be located along open sided walking surfaces, including mezzanines, equipment platforms, stairs, ramps and landings that are located more than 30 inches (762 mm) measured vertically to the floor or grade below at any point within 36 inches (914 mm) horizontally to the edge of the open side. Guards shall be adequate in strength and attachment in accordance with CBC 2013 Section 1607.8.
   - 11.1. Height. Required guards shall not be less than 42 inches (1067 mm) high, measured vertically as follows:
     - 11.1.a. From the adjacent walking surfaces;
     - 11.1.b. On stairs, from the line connecting the leading edges of the tread nosings; and
     - 11.1.c. On ramps, from the ramp surface at the guard.

TECHNE
DESIGN | DEVELOPMENT
3956 30th Street, San Diego, CA 92104
techne-us.com sustainablearchitect.org
o 619-940-5814 m 313-595-5814

CONSULTANTS

LICENSED ARCHITECT
MICHAEL RENE MORTON
C-19371
REN. 04/30/2015
STATE OF CALIFORNIA

414 29th Avenue
Oakland, CA 94601

OWNER

29th Avenue Group, LLC
1211 Embarcadero Way, Suite D
Oakland, CA 94606

BuildZig
Dream it. Build it. Zig it.

MARK	DATE	DESCRIPTION
01	11.10.14	1st Building Permit Submittal
02	02.23.15	2nd Building Permit Submittal

2/24/2015 2:19:50 PM

PROJECT NO: 1410
CAD DWG FILE: A404 - ENLARGED STAIR PLANS-A.DWG
DRAWN BY: A.S, M.M., J.C., J.S.
CHK'D BY: A.S., M.M

COPYRIGHT: TECHNE expressly reserves its common law copyright and other property rights in this document. This document shall not be reproduced, copied, changed or disclosed in any form or manner whatsoever without first obtaining the express written consent of TECHNE.

SHEET TITLE
ENLARGED STAIR PLANS

A406

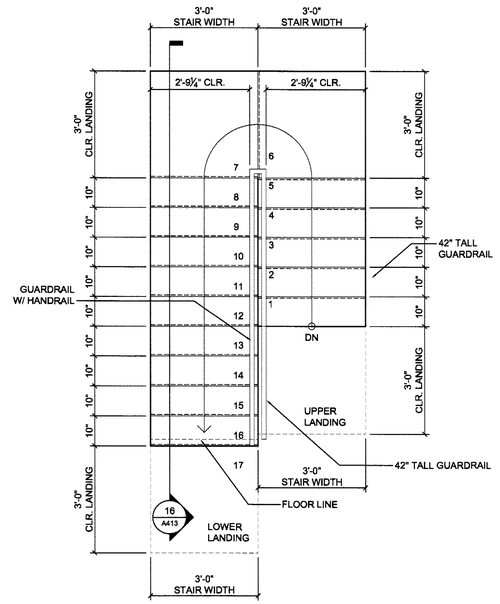

16 NEW STAIR FROM FIFTH FLOOR DOWN TO FOURTH FLOOR
RISE: 7 1/4", RUN: 10"

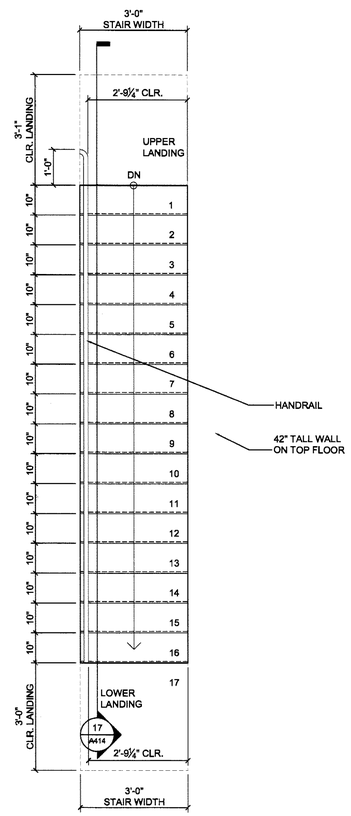

17 NEW STAIR FROM FIFTH FLOOR DOWN TO FOURTH FLOOR
RISE: 7 1/4", RUN: 10"

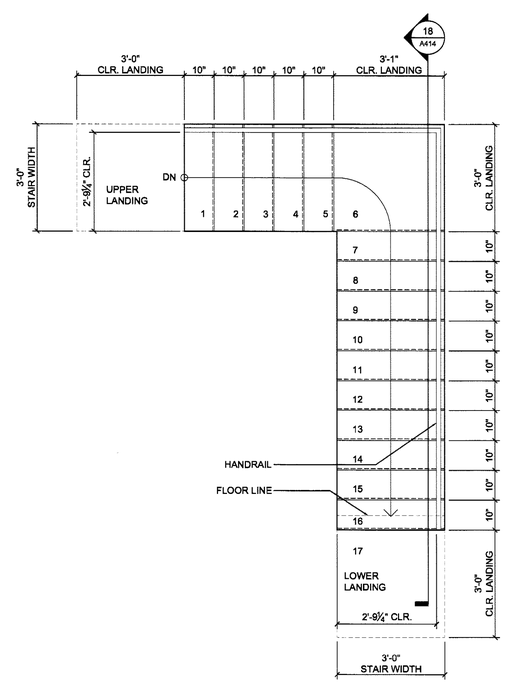

18 NEW STAIR FROM FIFTH FLOOR DOWN TO FOURTH FLOOR
Rise: 7 1/4", Run: 10"

STAIR NOTES

1. All new stairs shall comply with the latest adopted version of the California Building Code.
2. Stair treads and risers shall comply with CBC 2013 Sections 1009.7.1 through 1009.7.5.3.
3. In Group R-3 occupancies; within dwelling units in Group R-2 occupancies; and in Group U occupancies that are accessory to a Group R-3 occupancy or accessory to individual dwelling units in Group R-2 occupancies; the maximum riser height shall be 7¾" inches (197 mm); the minimum tread depth shall be 10 inches (254 mm); the minimum winder tread depth at the walkline shall be 10 inches (254 mm); and the minimum winder tread depth shall be 6 inches (152 mm). A nosing projection not less than ¾ inch (19.1 mm) but not more than 1¼ inches (32 mm) shall be provided on stairways with solid risers where the tread depth is less than 11 inches (279 mm).
4. Dimensional uniformity. Stair treads and risers shall be of uniform size and shape. The tolerance between the largest and smallest riser height or between the largest and smallest tread depth shall not exceed 3/8 inch (9.5 mm) in any flight of stairs. The greatest winder tread depth at the walkline within any flight of stairs shall not exceed the smallest by more than ⅜ inch (9.5 mm).
5. Stairway landings. There shall be a floor or landing at the top and bottom of each stairway. The width of landings shall not be less than the width of stairways they serve. Every landing shall have a minimum width measured perpendicular to the direction of travel equal to the width of the stairway. Where the stairway has a straight run the depth need not exceed 48 inches (1219 mm). Doors opening onto a landing shall not reduce the landing to less than one-half the required width. When fully open, the door shall not project more than 7 inches (178 mm) into a landing.
6. Outdoor conditions. Outdoor stairways and outdoor approaches to stairways shall be designed so that water will not accumulate on walking surfaces.
7. Enclosures under interior stairways. The walls and soffits within enclosed usable spaces under enclosed and unenclosed stairways shall be protected by I-hour fire-resistance-rated construction or the fire-resistance rating of the stairway enclosure, whichever is greater. Access to the enclosed space shall not be directly from within the stair enclosure.
   - 7.1. Exception: Spaces under stairways serving and contained within a single residential dwelling unit in Group R-2 or R-3 shall be permitted to be protected on the enclosed side with 1/2-inch (12.7 mm) gypsum board.
8. Handrails. Stairways shall have handrails on each side and shall comply with Section 1012. Where glass is used to provide the handrail, the handrail shall also comply with Section 2407.
   - 8.1. Exception: Stairways within dwelling units and spiral stairways are permitted to have a handrail on one side only.
9. Handrail Height. Handrail height, measured above stair tread nosings, or finish surface of ramp slope, shall be uniform, not less than 34 inches (864 mm) and not more than 38 inches (965 mm).
10. Headroom. Stairways shall have a minimum headroom clearance of 80 inches (2032 mm) measured vertically from a line connecting the edge of the nosings. Such headroom shall be continuous above the stairway to the point where the line intersects the landing below, one tread depth beyond the bottom riser. The minimum clearance shall be maintained the full width of the stairway and landing.
11. Guards. Guards shall be located along open sided walking surfaces, including mezzanines, equipment platforms, stairs, ramps and landings that are located more than 30 inches (762 mm) measured vertically to the floor or grade below at any point within 36 inches (914 mm) horizontally to the edge of the open side. Guards shall be adequate in strength and attachment in accordance with CBC 2013 Section 1607.8.
   - 11.1. Height. Required guards shall not be less than 42 inches (1067 mm) high, measured vertically as follows:
     - 11.1.a. From the adjacent walking surfaces;
     - 11.1.b. On stairs, from the line connecting the leading edges of the tread nosings; and
     - 11.1.c. On ramps, from the ramp surface at the guard.

APPROVED
CITY OF OAKLAND
ELECT. MECH. PLUMB.
NOT CHECKED

TECHNE
DESIGN | DEVELOPMENT
3956 30th Street, San Diego, CA 92104
techne-us.com sustainablearchitect.org
o 619-940-5814 m 313-595-5814

CONSULTANTS

LICENSED ARCHITECT
MICHAEL RENE MORTON
C-19371
REN. 04/30/2015
STATE OF CALIFORNIA

414 29th Avenue
Oakland, CA 94601

OWNER

29th Avenue Group, LLC
1211 Embarcadero Way, Suite D
Oakland, CA 94606

BuildZig
Dream it. Build it. Zig it.

MARK	DATE	DESCRIPTION
01	11.10.14	1st Building Permit Submittal
02	02.23.15	2nd Building Permit Submittal

5/24/2015 2:18:50 PM

PROJECT NO: 1410
CAD DWG FILE: A404 - ENLARGED STAIR PLANS-A.DWG
DRAWN BY: A.S, M.M., J.C., J.S.
CHK'D BY: A.S., M.M

COPYRIGHT: TECHNE expressly reserves its common law copyright and other property rights in this document. This document shall not be reproduced, copied, changed or disclosed in any form or manner whatsoever without first obtaining the express written consent of TECHNE.

SHEET TITLE
ENLARGED STAIR PLANS

FIELD COPY

A407

SHEET -- OF 100

STAIR NOTES

1. All new stairs shall comply with the latest adopted version of the California Building Code.
2. Stair treads and risers shall comply with CBC 2013 Sections 1009.7.1 through 1009.7.5.3.
3. In Group R-3 occupancies; within dwelling units in Group R-2 occupancies; and in Group U occupancies that are accessory to a Group R-3 occupancy or accessory to individual dwelling units in Group R-2 occupancies; the maximum riser height shall be 7¾" inches (197 mm); the minimum tread depth shall be 10 inches (254 mm); the minimum winder tread depth at the walkline shall be 10 inches (254 mm); and the minimum winder tread depth shall be 6 inches (152 mm). A nosing projection not less than ¾ inch (19.1 mm) but not more than 1½ inches (32 mm) shall be provided on stairways with solid risers where the tread depth is less than 11 inches (279 mm).
4. Dimensional uniformity. Stair treads and risers shall be of uniform size and shape. The tolerance between the largest and smallest riser height or between the largest and smallest tread depth shall not exceed 3/8 inch (9.5 mm) in any flight of stairs. The greatest winder tread depth at the walkline within any flight of stairs shall not exceed the smallest by more than ⅜ inch (9.5 mm).
5. Stairway landings. There shall be a floor or landing at the top and bottom of each stairway. The width of landings shall not be less than the width of stairways they serve. Every landing shall have a minimum width measured perpendicular to the direction of travel equal to the width of the stairway. Where the stairway has a straight run the depth need not exceed 48 inches (1219 mm). Doors opening onto a landing shall not reduce the landing to less than one-half the required width. When fully open, the door shall not project more than 7 inches (178 mm) into a landing.
6. Outdoor conditions. Outdoor stairways and outdoor approaches to stairways shall be designed so that water will not accumulate on walking surfaces.
7. Enclosures under interior stairways. The walls and soffits within enclosed usable spaces under enclosed and unenclosed stairways shall be protected by I-hour fire-resistance-rated construction or the fire-resistance rating of the stairway enclosure, whichever is greater. Access to the enclosed space shall not be directly from within the stair enclosure.
   - 7.1. Exception: Spaces under stairways serving and contained within a single residential dwelling unit in Group R-2 or R-3 shall be permitted to be protected on the enclosed side with 1/2-inch (12.7 mm) gypsum board.
8. Handrails. Stairways shall have handrails on each side and shall comply with Section 1012. Where glass is used to provide the handrail, the handrail shall also comply with Section 2407.
   - 8.1. Exception: Stairways within dwelling units and spiral stairways are permitted to have a handrail on one side only.
9. Handrail Height. Handrail height, measured above stair tread nosings, or finish surface of ramp slope, shall be uniform, not less than 34 inches (864 mm) and not more than 38 inches (965 mm).
10. Headroom. Stairways shall have a minimum headroom clearance of 80 inches (2032 mm) measured vertically from a line connecting the edge of the nosings. Such headroom shall be continuous above the stairway to the point where the line intersects the landing below, one tread depth beyond the bottom riser. The minimum clearance shall be maintained the full width of the stairway and landing.
11. Guards. Guards shall be located along open sided walking surfaces, including mezzanines, equipment platforms, stairs, ramps and landings that are located more than 30 inches (762 mm) measured vertically to the floor or grade below at any point within 36 inches (914 mm) horizontally to the edge of the open side. Guards shall be adequate in strength and attachment in accordance with CBC 2013 Section 1607.8.
   - 11.1. Height. Required guards shall not be less than 42 inches (1067 mm) high, measured vertically as follows:
     - 11.1.a. From the adjacent walking surfaces;
     - 11.1.b. On stairs, from the line connecting the leading edges of the tread nosings; and
     - 11.1.c. On ramps, from the ramp surface at the guard.

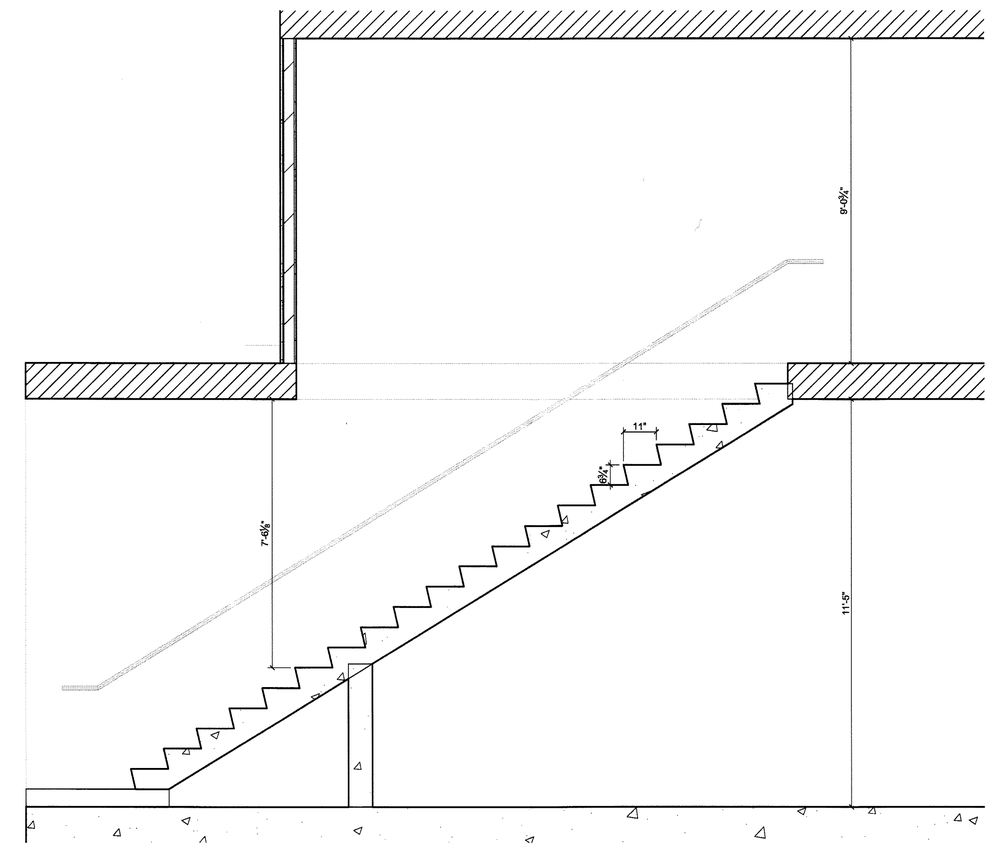

1 FROM FIRST FLOOR TO SECOND FLOOR
Stair Section

FIELD COPY

TECHNE
DESIGN | DEVELOPMENT
3956 30th Street, San Diego, CA 92104
techne-us.com sustainablearchitect.org
o 619-940-5814 m 313-595-5814

CONSULTANTS

LICENSED ARCHITECT
MICHAEL RENE MORTON
C-19371
REN. 04/30/2015
STATE OF CALIFORNIA

414 29th Avenue
Oakland, CA 94601

OWNER

29th Avenue Group, LLC
1211 Embarcadero Way, Suite D
Oakland, CA 94606

BuildZig
Dream it. Build it. Zig it.

APPROVED
MECH. PLUMB.
NOT CHECKED

MARK	DATE	DESCRIPTION
D1	11.10.14	1st Building Permit Submittal
D2	02.23.15	2nd Building Permit Submittal
D3	03.13.15	3rd Building Permit Submittal

5/14/2015 2:13:15 PM

PROJECT NO: 1410
CAD DWG FILE: A404 - ENLARGED STAIR PLANS.DWG
DRAWN BY: A.S, M.M., J.C., J.S.
CHK'D BY: A.S., M.M

COPYRIGHT: TECHNE expressly reserves its common law copyright and other property rights in this document. This document shall not be reproduced, copied, changed or disclosed in any form or manner whatsoever without first obtaining the express written consent of TECHNE.

SHEET TITLE
ENLARGED STAIR SECTIONS

A408

SHEET -- OF 100

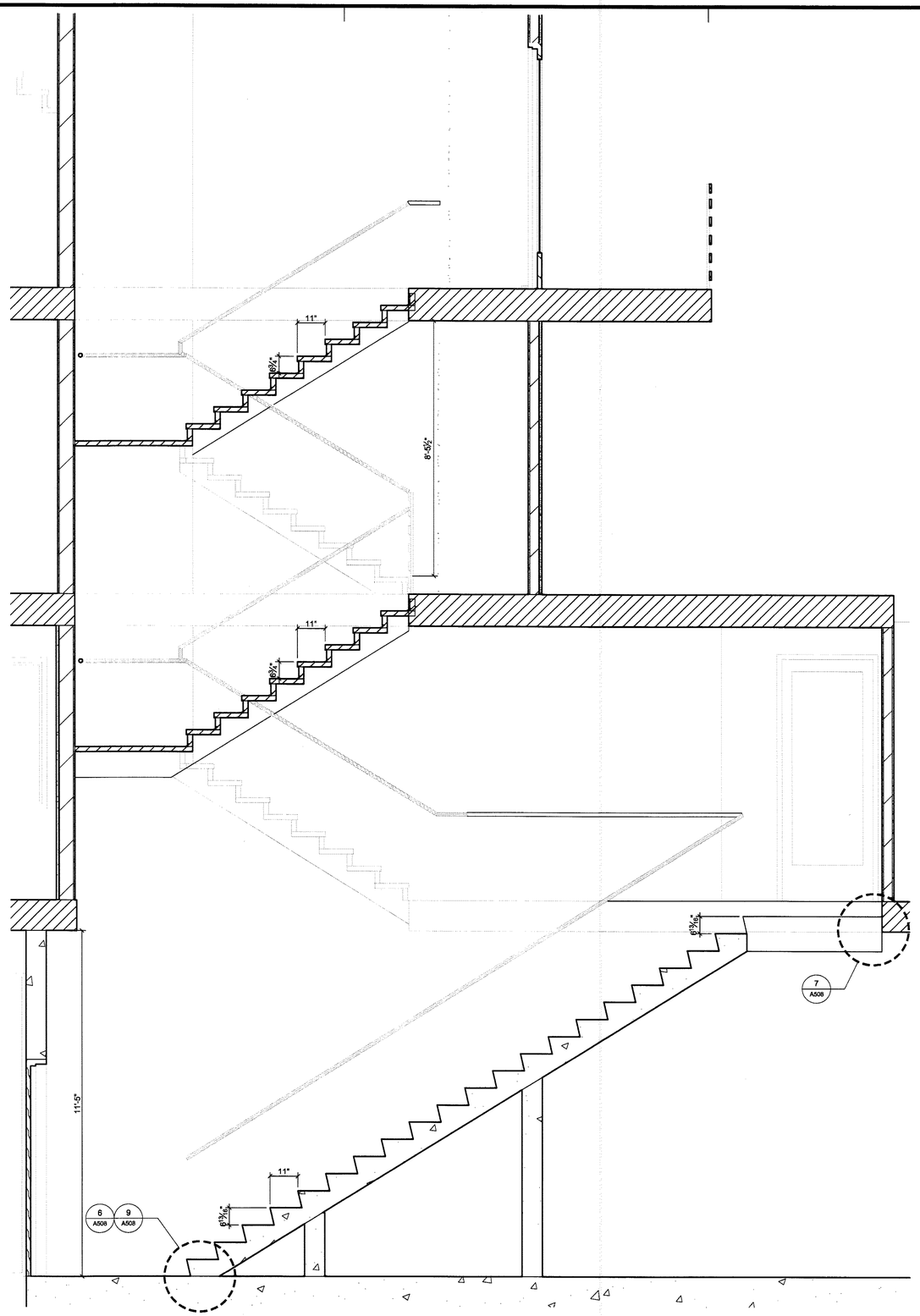

3 FROM FIRST FLOOR TO FOURTH FLOOR
Stair Section

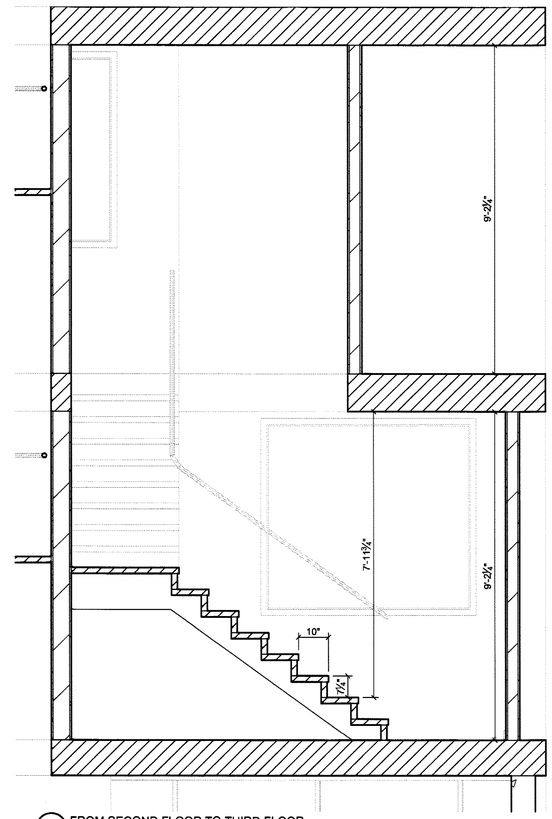

4 FROM SECOND FLOOR TO THIRD FLOOR
Stair Section

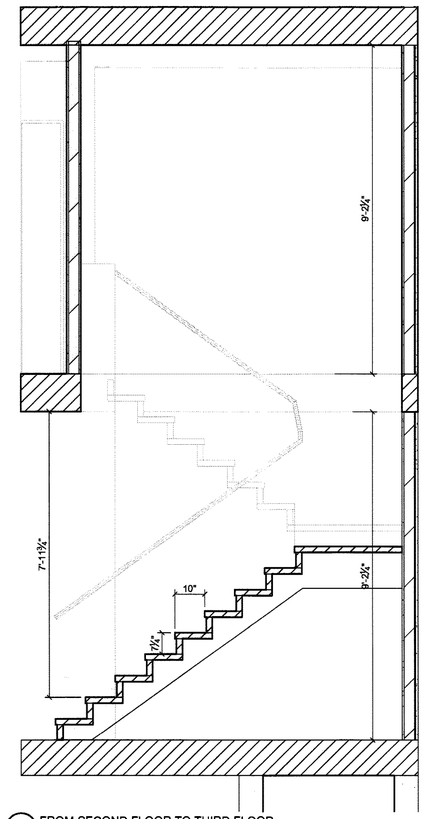

5 FROM SECOND FLOOR TO THIRD FLOOR
Stair Section

FIELD COPY

STAIR NOTES

1. All new stairs shall comply with the latest adopted version of the California Building Code.
2. Stair treads and risers shall comply with CBC 2013 Sections 1009.7.1 through 1009.7.5.3.
3. In Group R-3 occupancies; within dwelling units in Group R-2 occupancies; and in Group U occupancies that are accessory to a Group R-3 occupancy or accessory to individual dwelling units in Group R-2 occupancies; the maximum riser height shall be 7¾" inches (197 mm); the minimum tread depth shall be 10 inches (254 mm); the minimum winder tread depth at the walkline shall be 10 inches (254 mm); and the minimum winder tread depth shall be 6 inches (152 mm). A nosing projection not less than ¾ inch (19.1 mm) but not more than 1¼ inches (32 mm) shall be provided on stairways with solid risers where the tread depth is less than 11 inches (279 mm).
4. Dimensional uniformity. Stair treads and risers shall be of uniform size and shape. The tolerance between the largest and smallest riser height or between the largest and smallest tread depth shall not exceed 3/8 inch (9.5 mm) in any flight of stairs. The greatest winder tread depth at the walkline within any flight of stairs shall not exceed the smallest by more than ⅜ inch (9.5 mm).
5. Stairway landings. There shall be a floor or landing at the top and bottom of each stairway. The width of landings shall not be less than the width of stairways they serve. Every landing shall have a minimum width measured perpendicular to the direction of travel equal to the width of the stairway. Where the stairway has a straight run the depth need not exceed 48 inches (1219 mm). Doors opening onto a landing shall not reduce the landing to less than one-half the required width. When fully open, the door shall not project more than 7 inches (178 mm) into a landing.
6. Outdoor conditions. Outdoor stairways and outdoor approaches to stairways shall be designed so that water will not accumulate on walking surfaces.
7. Enclosures under interior stairways. The walls and soffits within enclosed usable spaces under enclosed and unenclosed stairways shall be protected by I-hour fire-resistance-rated construction or the fire-resistance rating of the stairway enclosure, whichever is greater. Access to the enclosed space shall not be directly from within the stair enclosure.
   - 7.1. Exception: Spaces under stairways serving and contained within a single residential dwelling unit in Group R-2 or R-3 shall be permitted to be protected on the enclosed side with 1/2-inch (12.7 mm) gypsum board.
8. Handrails. Stairways shall have handrails on each side and shall comply with Section 1012. Where glass is used to provide the handrail, the handrail shall also comply with Section 2407.
   - 8.1. Exception: Stairways within dwelling units and spiral stairways are permitted to have a handrail on one side only.
9. Handrail Height. Handrail height, measured above stair tread nosings, or finish surface of ramp slope, shall be uniform, not less than 34 inches (864 mm) and not more than 38 inches (965 mm).
10. Headroom. Stairways shall have a minimum headroom clearance of 80 inches (2032 mm) measured vertically from a line connecting the edge of the nosings. Such headroom shall be continuous above the stairway to the point where the line intersects the landing below, one tread depth beyond the bottom riser. The minimum clearance shall be maintained the full width of the stairway and landing.
11. Guards. Guards shall be located along open sided walking surfaces, including mezzanines, equipment platforms, stairs, ramps and landings that are located more than 30 inches (762 mm) measured vertically to the floor or grade below at any point within 36 inches (914 mm) horizontally to the edge of the open side. Guards shall be adequate in strength end attachment in accordance with CBC 2013 Section 1607.8.
   - 11.1. Height. Required guards shall not be less than 42 inches (1067 mm) high, measured vertically as follows:
     - 11.1.a. From the adjacent walking surfaces;
     - 11.1.b. On stairs, from the line connecting the leading edges of the tread nosings; and
     - 11.1.c. On ramps, from the ramp surface at the guard.

TECHNE
DESIGN | DEVELOPMENT
3956 30th Street, San Diego, CA 92104
techne-us.com sustainablearchitect.org
o 619-940-5814 m 313-595-5814

CONSULTANTS

LICENSED ARCHITECT
MICHAEL WAYNE MORTON
C-19371
REN. 04/30/2015
STATE OF CALIFORNIA

414 29th Avenue
Oakland, CA 94601

OWNER

29th Avenue Group, LLC
1211 Embarcadero Way, Suite D
Oakland, CA 94606

BuildZig
Dream it. Build it. Zig it.

MECH. PLUMB NOT CHECKED

MARK	DATE	DESCRIPTION
01	11.10.14	1st Building Permit Submittal
02	02.23.15	2nd Building Permit Submittal
03	03.13.15	3rd Building Permit Submittal

3/14/2015 2:13:19 PM

PROJECT NO: 1410
CAD DWG FILE: A404 - ENLARGED STAIR PLANS.DWG
DRAWN BY: A.S, M.M., J.C., J.S.
CHK'D BY: A.S., M.M

COPYRIGHT: TECHNE expressly reserves its common law copyright and other property rights in this document. This document shall not be reproduced, copied, changed or disclosed in any form or manner whatsoever without first obtaining the express written consent of TECHNE.

SHEET TITLE
ENLARGED STAIR SECTIONS

A409

SHEET – OF 100

STAIR NOTES

1. All new stairs shall comply with the latest adopted version of the California Building Code.
2. Stair treads and risers shall comply with CBC 2013 Sections 1009.7.1 through 1009.7.5.3.
3. In Group R-3 occupancies; within dwelling units in Group R-2 occupancies; and in Group U occupancies that are accessory to a Group R-3 occupancy or accessory to individual dwelling units in Group R-2 occupancies; the maximum riser height shall be 7¾" inches (197 mm); the minimum tread depth shall be 10 inches (254 mm); the minimum winder tread depth at the walkline shall be 10 inches (254 mm); and the minimum winder tread depth shall be 6 inches (152 mm). A nosing projection not less than ¾ inch (19.1 mm) but not more than 1¼ inches (32 mm) shall be provided on stairways with solid risers where the tread depth is less than 11 inches (279 mm).
4. Dimensional uniformity. Stair treads and risers shall be of uniform size and shape. The tolerance between the largest and smallest riser height or between the largest and smallest tread depth shall not exceed 3/8 inch (9.5 mm) in any flight of stairs. The greatest winder tread depth at the walkline within any flight of stairs shall not exceed the smallest by more than ⅜ inch (9.5 mm).
5. Stairway landings. There shall be a floor or landing at the top and bottom of each stairway. The width of landings shall not be less than the width of stairways they serve. Every landing shall have a minimum width measured perpendicular to the direction of travel equal to the width of the stairway. Where the stairway has a straight run the depth need not exceed 48 inches (1219 mm). Doors opening onto a landing shall not reduce the landing to less than one-half the required width. When fully open, the door shall not project more than 7 inches (178 mm) into a landing.
6. Outdoor conditions. Outdoor stairways and outdoor approaches to stairways shall be designed so that water will not accumulate on walking surfaces.
7. Enclosures under Interior stairways. The walls and soffits within enclosed usable spaces under enclosed and unenclosed stairways shall be protected by I-hour fire-resistance-rated construction or the fire-resistance rating of the stairway enclosure, whichever is greater. Access to the enclosed space shall not be directly from within the stair enclosure.
   - 7.1. Exception: Spaces under stairways serving and contained within a single residential dwelling unit in Group R-2 or R-3 shall be permitted to be protected on the enclosed side with 1/2-inch (12.7 mm) gypsum board.
8. Handrails. Stairways shall have handrails on each side and shall comply with Section 1012. Where glass is used to provide the handrail, the handrail shall also comply with Section 2407.
   - 8.1. Exception: Stairways within dwelling units and spiral stairways are permitted to have a handrail on one side only.
9. Handrail Height. Handrail height, measured above stair tread nosings, or finish surface of ramp slope, shall be uniform, not less than 34 inches (864 mm) and not more than 38 inches (965 mm).
10. Headroom. Stairways shall have a minimum headroom clearance of 80 inches (2032 mm) measured vertically from a line connecting the edge of the nosings. Such headroom shall be continuous above the stairway to the point where the line intersects the landing below, one tread depth beyond the bottom riser. The minimum clearance shall be maintained the full width of the stairway and landing.
11. Guards. Guards shall be located along open sided walking surfaces, including mezzanines, equipment platforms, stairs, ramps and landings that are located more than 30 inches (762 mm) measured vertically to the floor or grade below at any point within 36 inches (914 mm) horizontally to the edge of the open side. Guards shall be adequate in strength and attachment in accordance with CBC 2013 Section 1607.8.
   - 11.1. Height. Required guards shall not be less than 42 inches (1067 mm) high, measured vertically as follows:
     - 11.1.a. From the adjacent walking surfaces;
     - 11.1.b. On stairs, from the line connecting the leading edges of the tread nosings; and
     - 11.1.c. On ramps, from the ramp surface at the guard.

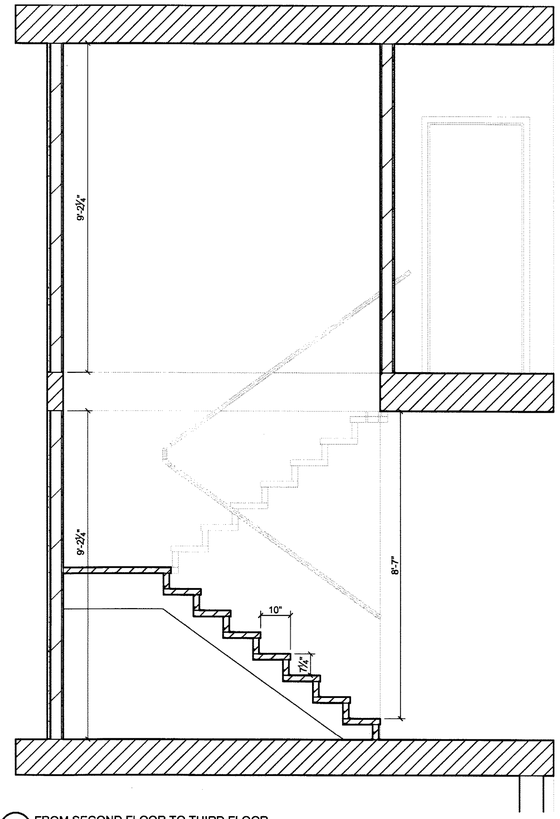

6 FROM SECOND FLOOR TO THIRD FLOOR
Stair Section

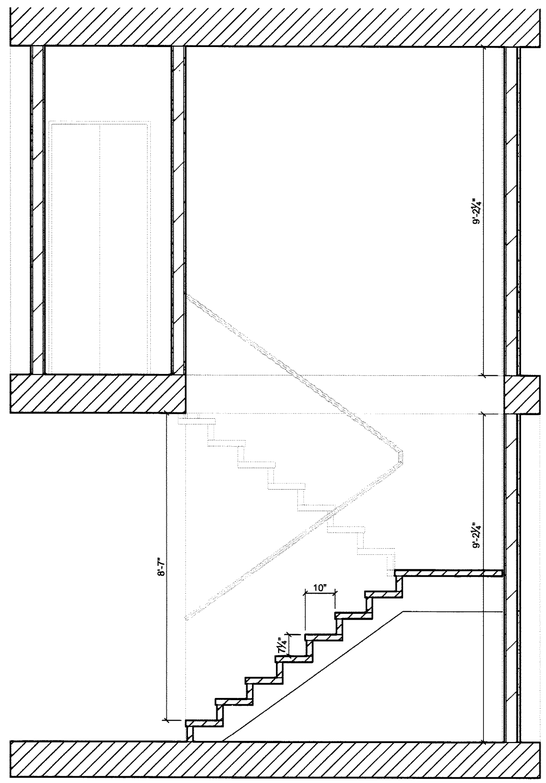

7 FROM SECOND FLOOR TO THIRD FLOOR
Stair Section

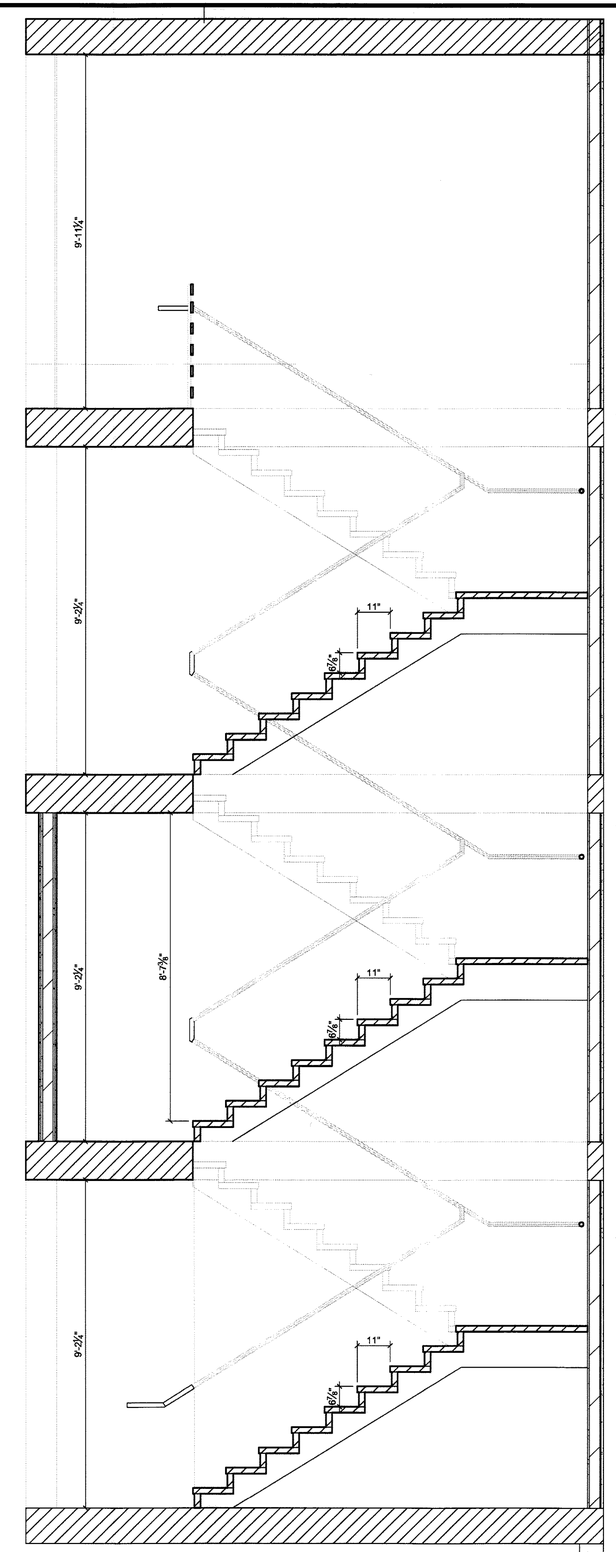

8 FROM SECOND FLOOR TO FIFTH FLOOR
Stair Section

FIELD COPY

TECHNE
DESIGN | DEVELOPMENT
3956 30th Street, San Diego, CA 92104
techne-us.com sustainablearchitect.org
o 619-940-5814 m 313-595-5814

CONSULTANTS

LICENSED ARCHITECT
MICHAEL RENE MORTON
C-19371
REN. 04/30/2015
STATE OF CALIFORNIA

414 29th Avenue
Oakland, CA 94601

OWNER

29th Avenue Group, LLC
1211 Embarcadero Way, Suite D
Oakland, CA 94606

BuildZig
Dream it. Build it. Zig it.

APPROVED
CITY OF OAKLAND
BUILDING SERVICES
NOT CHECKED

MARK	DATE	DESCRIPTION
01	11.10.14	1st Building Permit Submittal
02	02.23.15	2nd Building Permit Submittal

2/24/2015 2:18:50 PM

PROJECT NO: 1410
CAD DWG FILE: A404 - ENLARGED STAIR PLANS-A.DWG
DRAWN BY: A.S., M.M., J.C., J.S.
CHK'D BY: A.S., M.M

COPYRIGHT: TECHNE expressly reserves its common law copyright and other property rights in this document. This document shall not be reproduced, copied, changed or disclosed in any form or manner whatsoever without first obtaining the express written consent of TECHNE.

SHEET TITLE
ENLARGED STAIR SECTIONS

A410

SHEET – OF 100

STAIR NOTES

1. All new stairs shall comply with the latest adopted version of the California Building Code.
2. Stair treads and risers shall comply with CBC 2013 Sections 1009.7.1 through 1009.7.5.3.
3. In Group R-3 occupancies; within dwelling units in Group R-2 occupancies; and in Group U occupancies that are accessory to a Group R-3 occupancy or accessory to individual dwelling units in Group R-2 occupancies; the maximum riser height shall be 7¾" inches (197 mm); the minimum tread depth shall be 10 inches (254 mm); the minimum winder tread depth at the walkline shall be 10 inches (254 mm); and the minimum winder tread depth shall be 6 inches (152 mm). A nosing projection not less than ¾ inch (19.1 mm) but not more than 1¼ inches (32 mm) shall be provided on stairways with solid risers where the tread depth is less than 11 inches (279 mm).
4. Dimensional uniformity. Stair treads and risers shall be of uniform size and shape. The tolerance between the largest and smallest riser height or between the largest and smallest tread depth shall not exceed 3/8 inch (9.5 mm) in any flight of stairs. The greatest winder tread depth at the walkline within any flight of stairs shall not exceed the smallest by more than ⅜ inch (9.5 mm).
5. Stairway landings. There shall be a floor or landing at the top and bottom of each stairway. The width of landings shall not be less than the width of stairways they serve. Every landing shall have a minimum width measured perpendicular to the direction of travel equal to the width of the stairway. Where the stairway has a straight run the depth need not exceed 48 inches (1219 mm). Doors opening onto a landing shall not reduce the landing to less than one-half the required width. When fully open, the door shall not project more than 7 inches (178 mm) into a landing.
6. Outdoor conditions. Outdoor stairways and outdoor approaches to stairways shall be designed so that water will not accumulate on walking surfaces.
7. Enclosures under interior stairways. The walls and soffits within enclosed usable spaces under enclosed and unenclosed stairways shall be protected by I-hour fire-resistance-rated construction or the fire-resistance rating of the stairway enclosure, whichever is greater. Access to the enclosed space shall not be directly from within the stair enclosure.
   - 7.1. Exception: Spaces under stairways serving and contained within a single residential dwelling unit in Group R-2 or R-3 shall be permitted to be protected on the enclosed side with 1/2-inch (12.7 mm) gypsum board.
8. Handrails. Stairways shall have handrails on each side and shall comply with Section 1012. Where glass is used to provide the handrail, the handrail shall also comply with Section 2407.
   - 8.1. Exception: Stairways within dwelling units and spiral stairways are permitted to have a handrail on one side only.
9. Handrail Height. Handrail height, measured above stair tread nosings, or finish surface of ramp slope, shall be uniform, not less than 34 inches (864 mm) and not more than 38 inches (965 mm).
10. Headroom. Stairways shall have a minimum headroom clearance of 80 inches (2032 mm) measured vertically from a line connecting the edge of the nosings. Such headroom shall be continuous above the stairway to the point where the line intersects the landing below, one tread depth beyond the bottom riser. The minimum clearance shall be maintained the full width of the stairway and landing.
11. Guards. Guards shall be located along open sided walking surfaces, including mezzanines, equipment platforms, stairs, ramps and landings that are located more than 30 inches (762 mm) measured vertically to the floor or grade below at any point within 36 inches (914 mm) horizontally to the edge of the open side. Guards shall be adequate in strength and attachment in accordance with CBC 2013 Section 1607.8.
    - 11.1. Height. Required guards shall not be less than 42 inches (1067 mm) high, measured vertically as follows:
      - 11.1.a. From the adjacent walking surfaces;
      - 11.1.b. On stairs, from the line connecting the leading edges of the tread nosings; and
      - 11.1.c. On ramps, from the ramp surface at the guard.

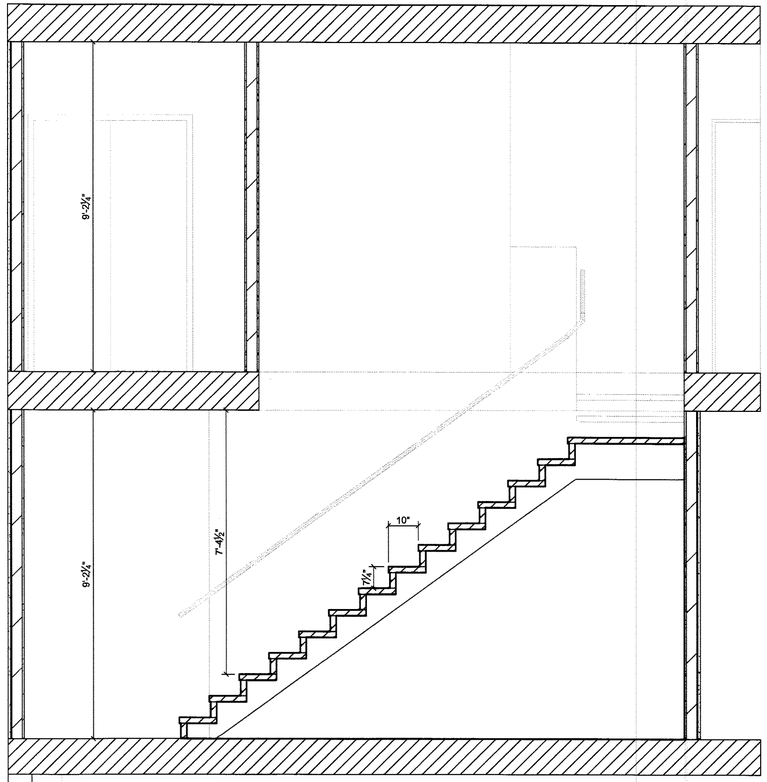

9 FROM SECOND FLOOR TO THIRD FLOOR
Stair Section

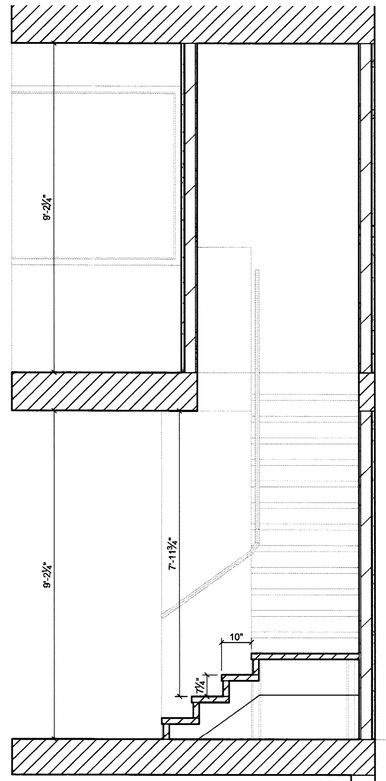

10 FROM SECOND FLOOR TO THIRD FLOOR
Stair Section

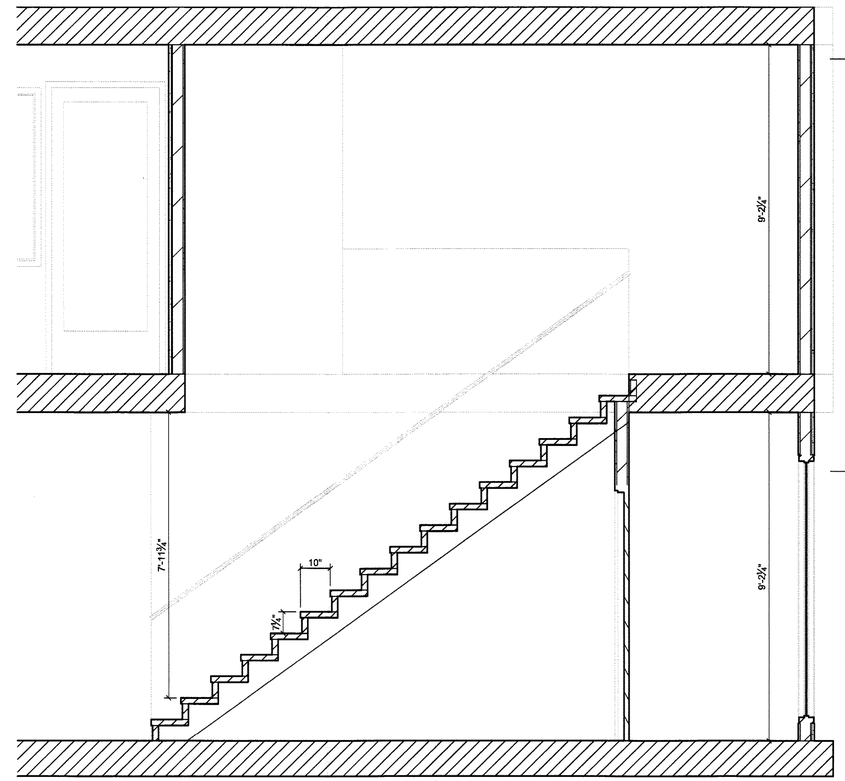

11 FROM SECOND FLOOR TO THIRD FLOOR
Stair Section

FIELD COPY

TECHNE
DESIGN | DEVELOPMENT
3956 30th Street, San Diego, CA 92104
techne-us.com sustainablearchitect.org
o 619-940-5814 m 313-595-5814

CONSULTANTS

LICENSED ARCHITECT
MICHAEL RENE MORTON
C-19371
REN. 04/30/2015
STATE OF CALIFORNIA

414 29th Avenue
Oakland, CA 94601

OWNER

29th Avenue Group, LLC
1211 Embarcadero Way, Suite D
Oakland, CA 94606

BuildZig
Dream it. Build it. Zig it.

APPROVED
CITY OF OAKLAND
BUILDING SERVICES
2
EXPIRES: MECH. PLAN
NOT ON SITE

MARK	DATE	DESCRIPTION
D1	11.10.14	1st Building Permit Submittal
D2	02.23.15	2nd Building Permit Submittal

6/24/2015 2:18:50 PM

PROJECT NO: 1410
CAD DWG FILE: A404 - ENLARGED STAIR PLANS-A.DWG
DRAWN BY: A.S, M.M., J.C., J.S.
CHK'D BY: A.S., M.M

COPYRIGHT: TECHNE expressly reserves its common law copyright and other property rights in this document. This document shall not be reproduced, copied, changed or disclosed in any form or manner whatsoever without first obtaining the express written consent of TECHNE.

SHEET TITLE
ENLARGED STAIR SECTIONS

A411

SHEET -- OF 100

STAIR NOTES

1. All new stairs shall comply with the latest adopted version of the California Building Code.
2. Stair treads and risers shall comply with CBC 2013 Sections 1009.7.1 through 1009.7.5.3.
3. In Group R-3 occupancies; within dwelling units in Group R-2 occupancies; and in Group U occupancies that are accessory to a Group R-3 occupancy or accessory to individual dwelling units in Group R-2 occupancies; the maximum riser height shall be 7¾" inches (197 mm); the minimum tread depth shall be 10 inches (254 mm); the minimum winder tread depth at the walkline shall be 10 inches (254 mm); and the minimum winder tread depth shall be 6 inches (152 mm). A nosing projection not less than ¾ inch (19.1 mm) but not more than 1¼ inches (32 mm) shall be provided on stairways with solid risers where the tread depth is less than 11 inches (279 mm).
4. Dimensional uniformity. Stair treads and risers shall be of uniform size and shape. The tolerance between the largest and smallest riser height or between the largest and smallest tread depth shall not exceed 3/8 inch (9.5 mm) in any flight of stairs. The greatest winder tread depth at the walkline within any flight of stairs shall not exceed the smallest by more than ⅜ inch (9.5 mm).
5. Stairway landings. There shall be a floor or landing at the top and bottom of each stairway. The width of landings shall not be less than the width of stairways they serve. Every landing shall have a minimum width measured perpendicular to the direction of travel equal to the width of the stairway. Where the stairway has a straight run the depth need not exceed 48 inches (1219 mm). Doors opening onto a landing shall not reduce the landing to less than one-half the required width. When fully open, the door shall not project more than 7 inches (178 mm) into a landing.
8. Outdoor conditions. Outdoor stairways and outdoor approaches to stairways shall be designed so that water will not accumulate on walking surfaces.
7. Enclosures under interior stairways. The walls and soffits within enclosed usable spaces under enclosed and unenclosed stairways shall be protected by I-hour fire-resistance-rated construction or the fire-resistance rating of the stairway enclosure, whichever is greater. Access to the enclosed space shall not be directly from within the stair enclosure.
   - 7.1. Exception: Spaces under stairways serving and contained within a single residential dwelling unit in Group R-2 or R-3 shall be permitted to be protected on the enclosed side with 1/2-inch (12.7 mm) gypsum board.
8. Handrails. Stairways shall have handrails on each side and shall comply with Section 1012. Where glass is used to provide the handrail, the handrail shall also comply with Section 2407.
   - 8.1. Exception: Stairways within dwelling units and spiral stairways are permitted to have a handrail on one side only.
9. Handrail Height. Handrail height, measured above stair tread nosings, or finish surface of ramp slope, shall be uniform, not less than 34 inches (864 mm) and not more than 38 inches (965 mm).
10. Headroom. Stairways shall have a minimum headroom clearance of 80 inches (2032 mm) measured vertically from a line connecting the edge of the nosings. Such headroom shall be continuous above the stairway to the point where the line intersects the landing below, one tread depth beyond the bottom riser. The minimum clearance shall be maintained the full width of the stairway and landing.
11. Guards. Guards shall be located along open sided walking surfaces, including mezzanines, equipment platforms, stairs, ramps and landings that are located more than 30 inches (762 mm) measured vertically to the floor or grade below at any point within 36 inches (914 mm) horizontally to the edge of the open side. Guards shall be adequate in strength and attachment in accordance with CBC 2013 Section 1607.8.
   - 11.1. Height. Required guards shall not be less than 42 inches (1067 mm) high, measured vertically as follows:
     - 11.1.a. From the adjacent walking surfaces;
     - 11.1.b. On stairs, from the line connecting the leading edges of the tread nosings; and
     - 11.1.c. On ramps, from the ramp surface at the guard.

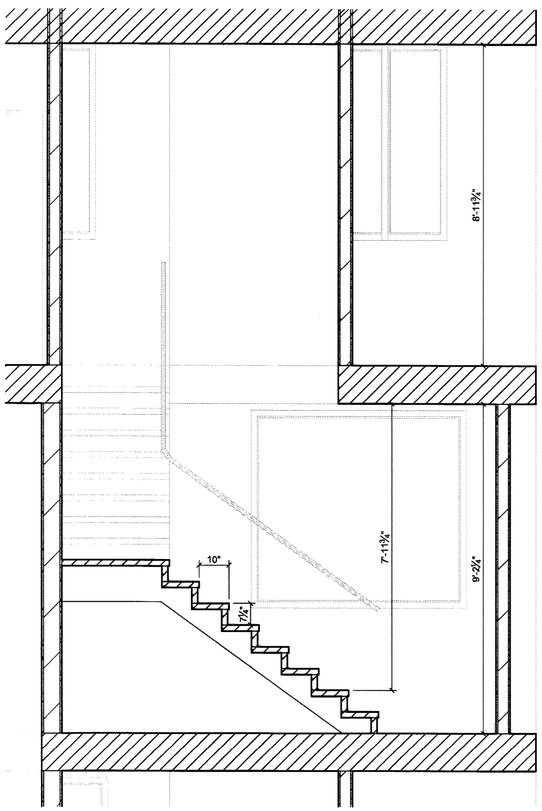

12 FROM FOURTH FLOOR TO FIFTH FLOOR
Stair Section

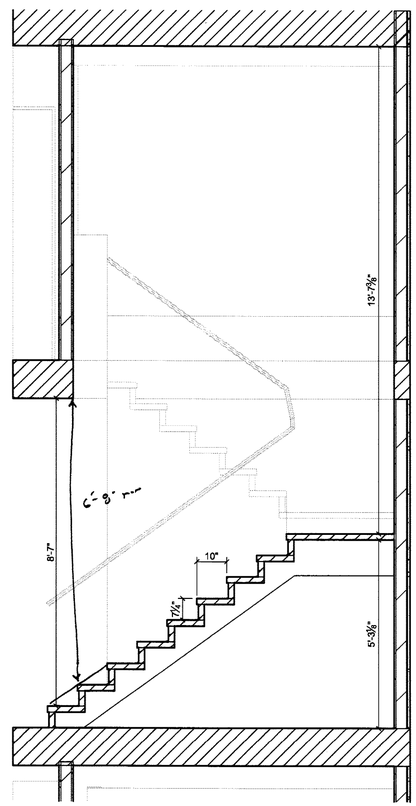

13 FROM FOURTH FLOOR TO FIFTH FLOOR
Stair Section

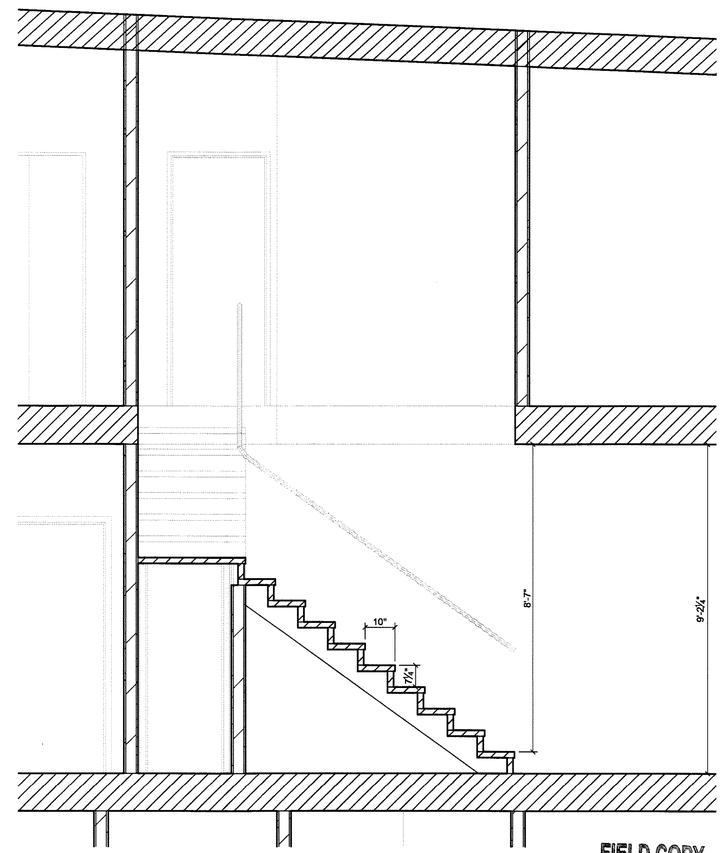

FIELD COPY

14 FROM FOURTH FLOOR TO FIFTH FLOOR
Stair Section

TECHNE
DESIGN | DEVELOPMENT
3956 30th Street, San Diego, CA 92104
techne-us.com sustainablearchitect.org
o 619-940-5814 m 313-595-5814

CONSULTANTS

LICENSED ARCHITECT
MICHAEL RENE MORTON
C-19371
REN. 04/30/2015
STATE OF CALIFORNIA

414 29th Avenue
Oakland, CA 94601

OWNER

29th Avenue Group, LLC
1211 Embarcadero Way, Suite D
Oakland, CA 94606

BuildZig
Dream it. Build it. Zig it.
APPROVED
CITY OF OAKLAND
BUILDING DIVISION
ELECT MECH. PLUMB
NOT CHECKED

MARK	DATE	DESCRIPTION
01	11.10.14	1st Building Permit Submittal
02	02.23.15	2nd Building Permit Submittal

2/24/2015 2:15:50 PM

PROJECT NO: 1410
CAD DWG FILE: A404 - ENLARGED STAIR PLANS-A.DWG
DRAWN BY: A.S, M.M., J.C., J.S.
CHK'D BY: A.S., M.M

COPYRIGHT: TECHNE expressly reserves its common law copyright and other property rights in this document. This document shall not be reproduced, copied, changed or disclosed in any form or manner whatsoever without first obtaining the express written consent of TECHNE.

SHEET TITLE
ENLARGED STAIR SECTIONS

A412

STAIR NOTES

1. All new stairs shall comply with the latest adopted version of the California Building Code.
2. Stair treads and risers shall comply with CBC 2013 Sections 1009.7.1 through 1009.7.5.3.
3. In Group R-3 occupancies; within dwelling units in Group R-2 occupancies; and in Group U occupancies that are accessory to a Group R-3 occupancy or accessory to individual dwelling units in Group R-2 occupancies; the maximum riser height shall be 7¾" inches (197 mm); the minimum tread depth shall be 10 inches (254 mm); the minimum winder tread depth at the walkline shall be 10 inches (254 mm); and the minimum winder tread depth shall be 6 inches (152 mm). A nosing projection not less than ¾ inch (19.1 mm) but not more than 1¼ inches (32 mm) shall be provided on stairways with solid risers where the tread depth is less than 11 inches (279 mm).
4. Dimensional uniformity. Stair treads and risers shall be of uniform size and shape. The tolerance between the largest and smallest riser height or between the largest and smallest tread depth shall not exceed 3/8 inch (9.5 mm) in any flight of stairs. The greatest winder tread depth at the walkline within any flight of stairs shall not exceed the smallest by more than ⅜ inch (9.5 mm).
5. Stairway landings. There shall be a floor or landing at the top and bottom of each stairway. The width of landings shall not be less than the width of stairways they serve. Every landing shall have a minimum width measured perpendicular to the direction of travel equal to the width of the stairway. Where the stairway has a straight run the depth need not exceed 48 inches (1219 mm). Doors opening onto a landing shall not reduce the landing to less than one-half the required width. When fully open, the door shall not project more than 7 inches (178 mm) into a landing.
6. Outdoor conditions. Outdoor stairways and outdoor approaches to stairways shall be designed so that water will not accumulate on walking surfaces.
7. Enclosures under interior stairways. The walls and soffits within enclosed usable spaces under enclosed and unenclosed stairways shall be protected by I-hour fire-resistance-rated construction or the fire-resistance rating of the stairway enclosure, whichever is greater. Access to the enclosed space shall not be directly from within the stair enclosure.
   - 7.1. Exception: Spaces under stairways serving and contained within a single residential dwelling unit in Group R-2 or R-3 shall be permitted to be protected on the enclosed side with 1/2-inch (12.7 mm) gypsum board.
8. Handrails. Stairways shall have handrails on each side and shall comply with Section 1012. Where glass is used to provide the handrail, the handrail shall also comply with Section 2407.
   - 8.1. Exception: Stairways within dwelling units and spiral stairways are permitted to have a handrail on one side only.
9. Handrail Height. Handrail height, measured above stair tread nosings, or finish surface of ramp slope, shall be uniform, not less than 34 inches (864 mm) and not more than 38 inches (965 mm).
10. Headroom. Stairways shall have a minimum headroom clearance of 80 inches (2032 mm) measured vertically from a line connecting the edge of the nosings. Such headroom shall be continuous above the stairway to the point where the line intersects the landing below, one tread depth beyond the bottom riser. The minimum clearance shall be maintained the full width of the stairway and landing.
11. Guards. Guards shall be located along open sided walking surfaces, including mezzanines, equipment platforms, stairs, ramps and landings that are located more than 30 inches (762 mm) measured vertically to the floor or grade below at any point within 36 inches (914 mm) horizontally to the edge of the open side. Guards shall be adequate in strength and attachment in accordance with CBC 2013 Section 1607.8.
   - 11.1. Height. Required guards shall not be less than 42 inches (1067 mm) high, measured vertically as follows:
     - 11.1.a. From the adjacent walking surfaces;
     - 11.1.b. On stairs, from the line connecting the leading edges of the tread nosings; and
     - 11.1.c. On ramps, from the ramp surface at the guard.

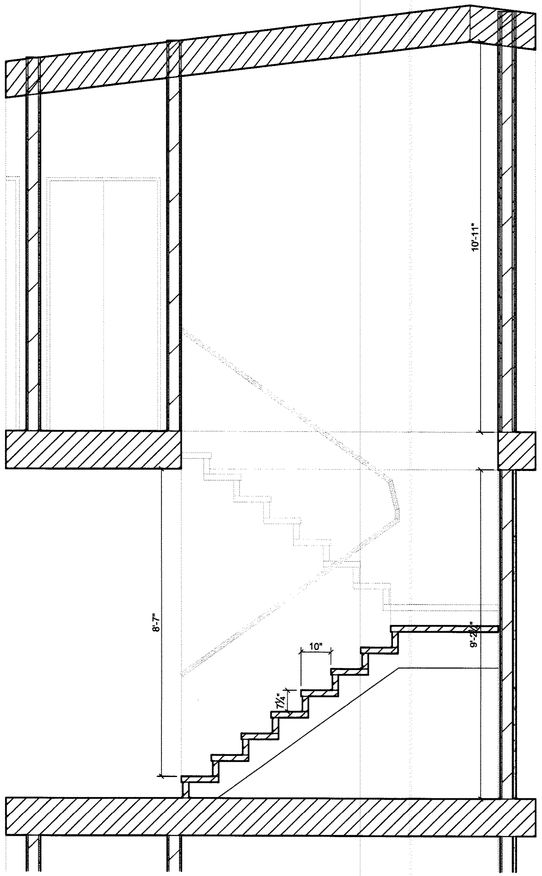

15 FROM FOURTH FLOOR TO FIFTH FLOOR
Stair Section

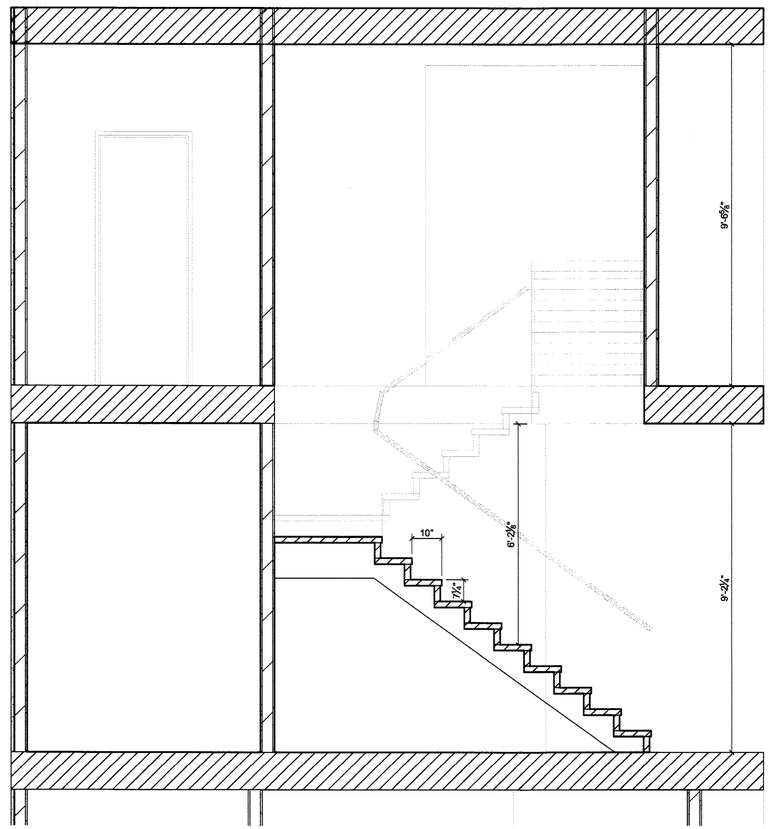

16 FROM FOURTH FLOOR TO FIFTH FLOOR
Stair Section

APPROVED
CITY OF OAKLAND
BUILDING SERVICES
ELECT. MECH. PLUS
NOT CHECKED

FIELD COPY

TECHNE
DESIGN | DEVELOPMENT
3956 30th Street, San Diego, CA 92104
techne-us.com sustainablearchitect.org
o 619-940-5814 m 313-595-5814

CONSULTANTS

LICENSED ARCHITECT
MICHAEL RENE MORTON
C-19371
REN. 04/30/2015
STATE OF CALIFORNIA

414 29th Avenue
Oakland, CA 94601

OWNER

29th Avenue Group, LLC
1211 Embarcadero Way, Suite D
Oakland, CA 94606

BuildZig
Dream it. Build it. Zig it.

MARK	DATE	DESCRIPTION
01	11.10.14	1st Building Permit Submittal
02	02.23.15	2nd Building Permit Submittal

2/24/2015 2:15:50 PM

PROJECT NO: 1410
CAD DWG FILE: A404 - ENLARGED STAIR PLANS-A.DWG
DRAWN BY: A.S, M.M., J.C., J.S.
CHK'D BY: A.S., M.M

COPYRIGHT: TECHNE expressly reserves its common law copyright and other property rights in this document. This document shall not be reproduced, copied, changed or disclosed in any form or manner whatsoever without first obtaining the express written consent of TECHNE.

SHEET TITLE
ENLARGED STAIR SECTIONS

A413

SHEET -- OF 100

STAIR NOTES

1. All new stairs shall comply with the latest adopted version of the California Building Code.
2. Stair treads and risers shall comply with CBC 2013 Sections 1009.7.1 through 1009.7.5.3.
3. In Group R-3 occupancies; within dwelling units in Group R-2 occupancies; and in Group U occupancies that are accessory to a Group R-3 occupancy or accessory to individual dwelling units in Group R-2 occupancies; the maximum riser height shall be 7¾" inches (197 mm); the minimum tread depth shall be 10 inches (254 mm); the minimum winder tread depth at the walkline shall be 10 inches (254 mm); and the minimum winder tread depth shall be 6 inches (152 mm). A nosing projection not less than ¾ inch (19.1 mm) but not more than 1½ inches (32 mm) shall be provided on stairways with solid risers where the tread depth is less than 11 inches (279 mm).
4. Dimensional uniformity. Stair treads and risers shall be of uniform size and shape. The tolerance between the largest and smallest riser height or between the largest and smallest tread depth shall not exceed 3/8 inch (9.5 mm) in any flight of stairs. The greatest winder tread depth at the walkline within any flight of stairs shall not exceed the smallest by more than ⅜ inch (9.5 mm).
5. Stairway landings. There shall be a floor or landing at the top and bottom of each stairway. The width of landings shall not be less than the width of stairways they serve. Every landing shall have a minimum width measured perpendicular to the direction of travel equal to the width of the stairway. Where the stairway has a straight run the depth need not exceed 48 inches (1219 mm). Doors opening onto a landing shall not reduce the landing to less than one-half the required width. When fully open, the door shall not project more than 7 inches (178 mm) into a landing.
6. Outdoor conditions. Outdoor stairways and outdoor approaches to stairways shall be designed so that water will not accumulate on walking surfaces.
7. Enclosures under interior stairways. The walls and soffits within enclosed usable spaces under enclosed and unenclosed stairways shall be protected by I-hour fire-resistance-rated construction or the fire-resistance rating of the stairway enclosure, whichever is greater. Access to the enclosed space shall not be directly from within the stair enclosure.
   - 7.1. Exception: Spaces under stairways serving and contained within a single residential dwelling unit in Group R-2 or R-3 shall be permitted to be protected on the enclosed side with 1/2-inch (12.7 mm) gypsum board.
8. Handrails. Stairways shall have handrails on each side and shall comply with Section 1012. Where glass is used to provide the handrail, the handrail shall also comply with Section 2407.
   - 8.1. Exception: Stairways within dwelling units and spiral stairways are permitted to have a handrail on one side only.
9. Handrail Height. Handrail height, measured above stair tread nosings, or finish surface of ramp slope, shall be uniform, not less than 34 inches (864 mm) and not more than 38 inches (965 mm).
10. Headroom. Stairways shall have a minimum headroom clearance of 80 inches (2032 mm) measured vertically from a line connecting the edge of the nosings. Such headroom shall be continuous above the stairway to the point where the line intersects the landing below, one tread depth beyond the bottom riser. The minimum clearance shall be maintained the full width of the stairway and landing.
11. Guards. Guards shall be located along open sided walking surfaces, including mezzanines, equipment platforms, stairs, ramps and landings that are located more than 30 inches (762 mm) measured vertically to the floor or grade below at any point within 36 inches (914 mm) horizontally to the edge of the open side. Guards shall be adequate in strength and attachment in accordance with CBC 2013 Section 1607.8.
   - 11.1. Height. Required guards shall not be less than 42 inches (1067 mm) high, measured vertically as follows:
     - 11.1.a. From the adjacent walking surfaces;
     - 11.1.b. On stairs, from the line connecting the leading edges of the tread nosings; and
     - 11.1.c. On ramps, from the ramp surface at the guard.

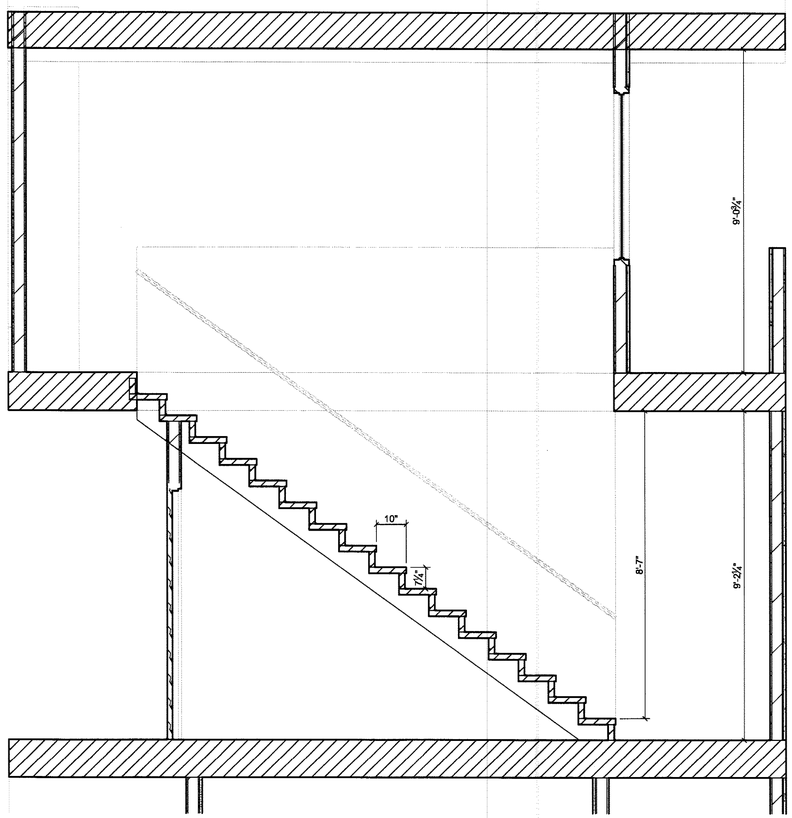

17 FROM FOURTH FLOOR TO FIFTH FLOOR
Stair Section

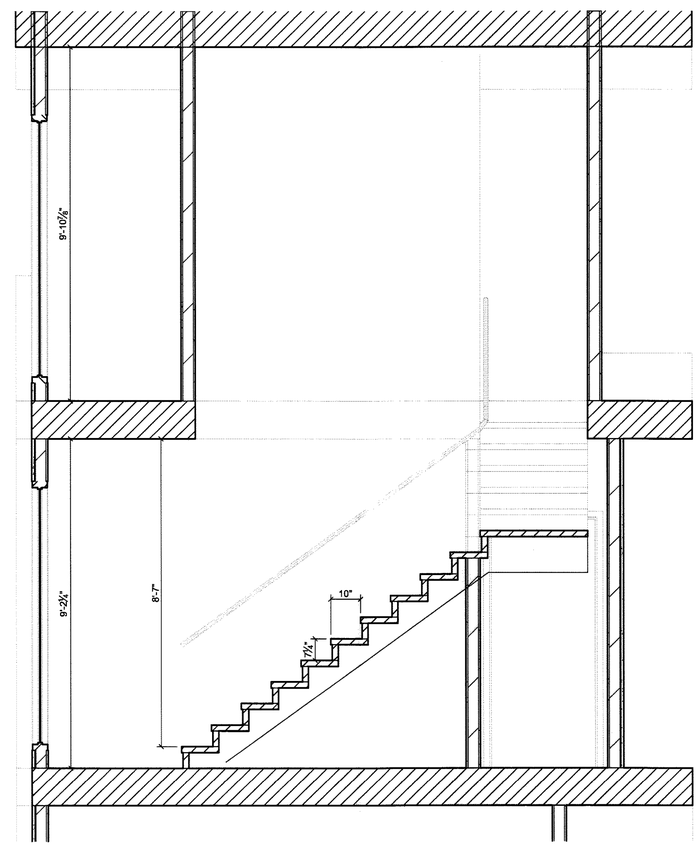

18 FROM FOURTH FLOOR TO FIFTH FLOOR
Viewport Scale

APPROVED
CITY OF OAKLAND
BUILDING SERVICES
PLANNING
ZONING
HEIGHT
SETBACKS
PLOT PLAN REVIEW
FLOOR AREA
LANDSCAPE/GRADING
ELECTRICAL
MECHANICAL
PLUMBING
ELEVATOR
STRUCTURAL
NOT CHECKED

FIELD COPY

TECHNE
DESIGN | DEVELOPMENT
3956 30th Street, San Diego, CA 92104
techne-us.com sustainablearchitect.org
D 619-940-5814 m 313-595-5814

CONSULTANTS

LICENSED ARCHITECT
MICHAEL REE MORTON
C-19371
REN. 04/30/2015
STATE OF CALIFORNIA

414 29th Avenue
Oakland, CA 94601

OWNER

29th Avenue Group, LLC
1211 Embarcadero Way, Suite D
Oakland, CA 94606

BuildZig
Dream it. Build it. Zig it.

MARK	DATE	DESCRIPTION
01	11.10.14	1st Building Permit Submittal
02	02.23.15	2nd Building Permit Submittal

2/24/2015 2:15:50 PM

PROJECT NO: 1410
CAD DWG FILE: A404 - ENLARGED STAIR PLANS-A.DWG
DRAWN BY: A.S, M.M., J.C., J.S.
CHK'D BY: A.S., M.M

COPYRIGHT: TECHNE expressly reserves its common law copyright and other property rights in this document. This document shall not be reproduced, copied, changed or disclosed in any form or manner whatsoever without first obtaining the express written consent of TECHNE.

SHEET TITLE
ENLARGED STAIR SECTIONS

A414

SHEET -- OF 100

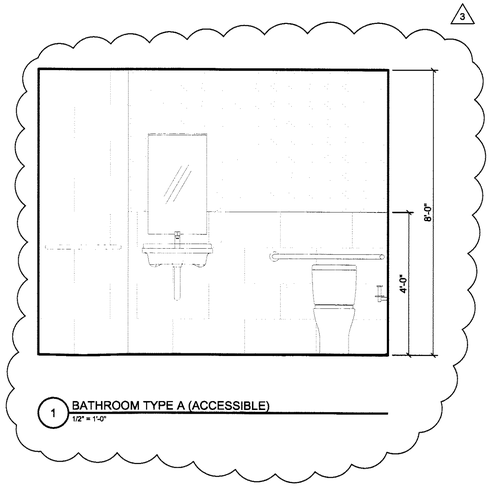

1 BATHROOM TYPE A (ACCESSIBLE)
1/2" = 1'-0"

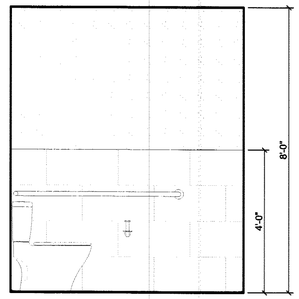

2 BATHROOM TYPE A (ACCESSIBLE)
1/2" = 1'-0"

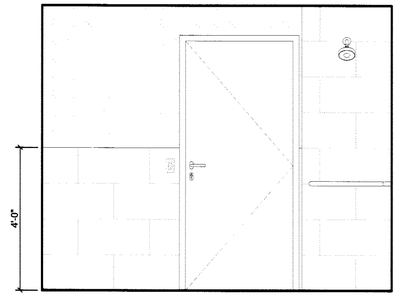

3 BATHROOM TYPE A (ACCESSIBLE)
1/2" = 1'-0"

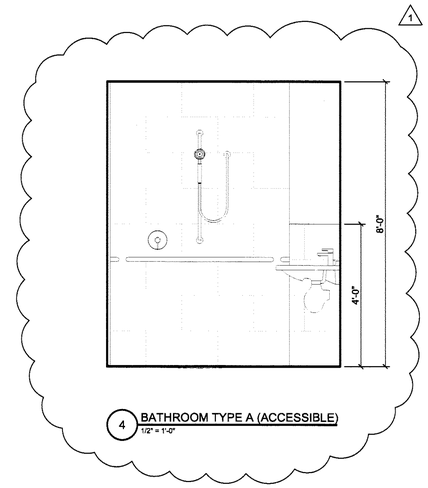

4 BATHROOM TYPE A (ACCESSIBLE)
1/2" = 1'-0"

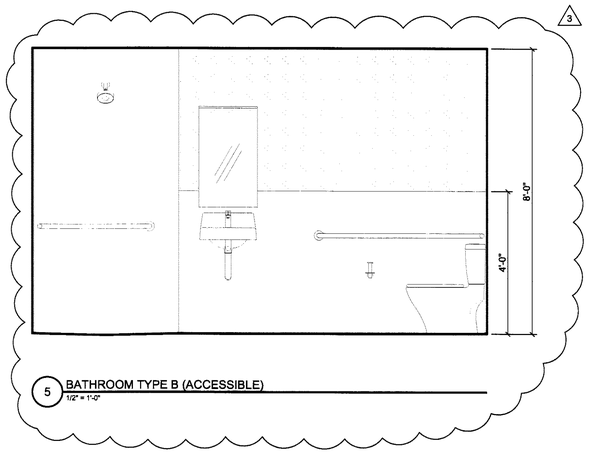

5 BATHROOM TYPE B (ACCESSIBLE)
1/2" = 1'-0"

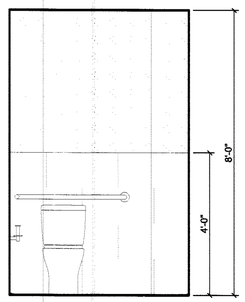

6 BATHROOM TYPE B
1/2" = 1'-0"

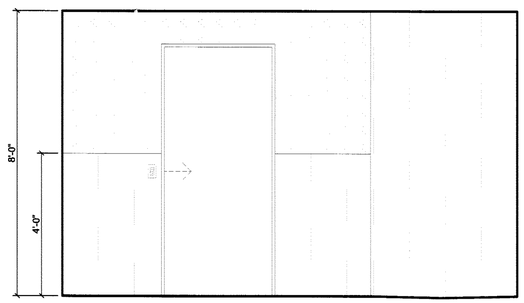

7 BATHROOM TYPE B (ACCESSIBLE)
1/2" = 1'-0"

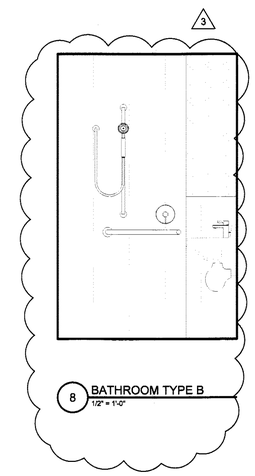

8 BATHROOM TYPE B
1/2" = 1'-0"

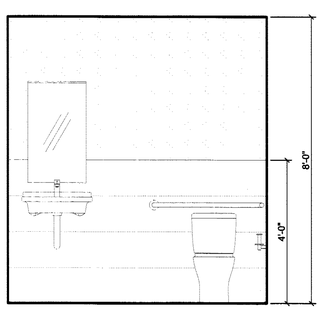

9 BATHROOM TYPE A1 (ACCESSIBLE)
1/2" = 1'-0"

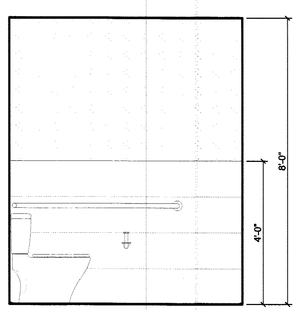

10 BATHROOM TYPE A1 (ACCESSIBLE)
1/2" = 1'-0"

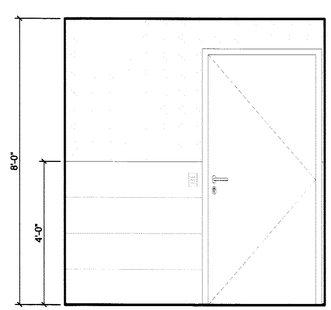

11 BATHROOM TYPE A1 (ACCESSIBLE)
1/2" = 1'-0"

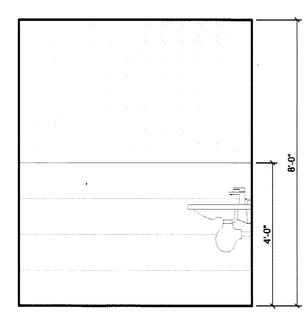

12 BATHROOM TYPE A1 (ACCESSIBLE)
1/2" = 1'-0"

APPROVED
CITY OF OAKLAND
PLANS SERVICES
AS NOTED
COMPLIANCE WITH
CONDITIONS OF
APPROVED APPROVAL
BY
DATE
PLAN REVIEW
SITE WORK LAYOUT
GRADING AND
EROSION CONTROL
SOILS REPORT ON FILE
ARCH. MECH. PLUMB.
NOT CHECKED

FIELD COPY

TECHNE
DESIGN | DEVELOPMENT
3956 30th Street, San Diego, CA 92104
techne-us.com sustainablearchitect.org
o 619-940-5814 m 313-595-5814

CONSULTANTS

LICENSED ARCHITECT
MICHAEL RENE MORTON
C-19371
REN. 04/30/2015
STATE OF CALIFORNIA

414 29th Avenue
Oakland, CA 94601

OWNER

29th Avenue Group, LLC
1211 Embarcadero Way, Suite D
Oakland, CA 94606

BuildZig
Dream it. Build it. Zig it.

MARK	DATE	DESCRIPTION
01	11.10.14	1st Building Permit Submittal
02	02.23.15	2nd Building Permit Submittal
03	03.13.15	3rd Building Permit Submittal

3/13/2015 9:04:05 AM

PROJECT NO: 1410

CAD DWG FILE: A420 - INTERIOR ELEVATIONS.DWG

DRAWN BY: A.S, M.M., J.C., J.S.

CHK'D BY: A.S., M.M

COPYRIGHT: TECHNE expressly reserves its common law copyright and other property rights in this document. This document shall not be reproduced, copied, changed or disclosed in any form or manner whatsoever without first obtaining the express written consent of TECHNE.

SHEET TITLE

INTERIOR ELEVATIONS

A420

SHEET -- OF 100

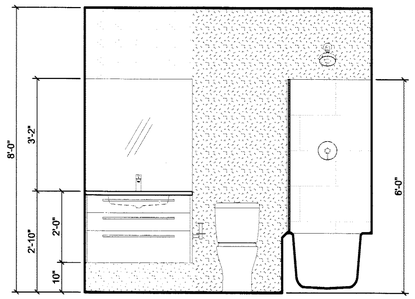

1 BATHROOM TYPE "C"
1/2" = 1'-0"

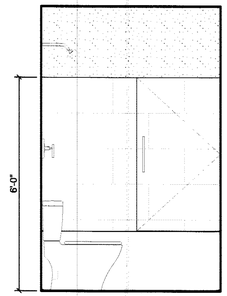

2 BATHROOM TYPE "C"
1/2" = 1'-0"

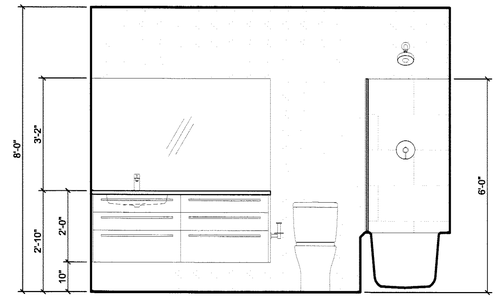

3 BATHROOM TYPE "D"
1/2" = 1'-0"

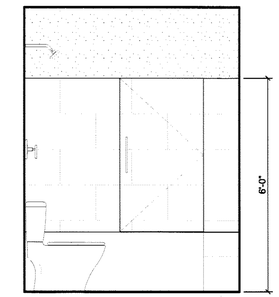

4 BATHROOM TYPE "D"
1/2" = 1'-0"

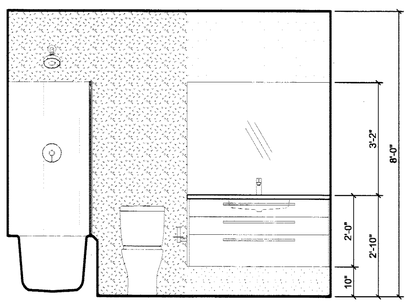

5 BATHROOM TYPE "E"
1/2" = 1'-0"

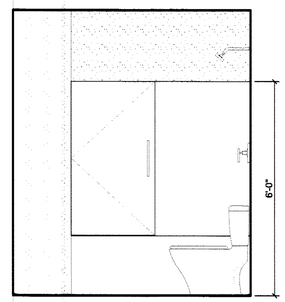

6 BATHROOM TYPE "E"
1/2" = 1'-0"

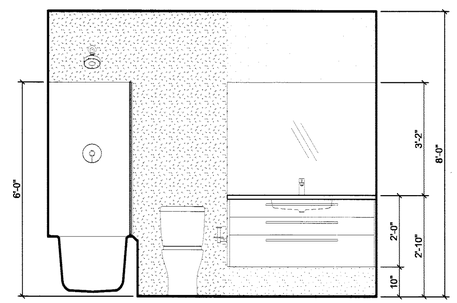

7 BATHROOM TYPE "F"
1/2" = 1'-0"

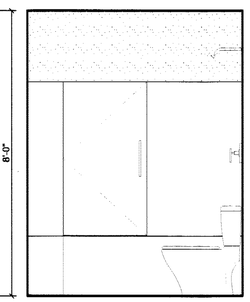

8 BATHROOM TYPE "F"
1/2" = 1'-0"

APPROVED
CITY OF OAKLAND
BUILDING SERVICES
ELECT. MECH. PL.
NOT CHECKED

FIELD COPY

TECHNE
DESIGN | DEVELOPMENT
3956 30th Street, San Diego, CA 92104
techne-us.com sustainablearchitect.org
o 619-940-5814 m 313-595-5814

CONSULTANTS

LICENSED ARCHITECT
MICHAEL RAYNE MORTON
C-19371
REN. 04/30/2015
STATE OF CALIFORNIA

414 29th Avenue
Oakland, CA 94601

OWNER

29th Avenue Group, LLC
1211 Embarcadero Way, Suite D
Oakland, CA 94606

BuildZig
Dream it. Build it. Zig it.

MARK	DATE	DESCRIPTION
01	11.10.14	1st Building Permit Submittal
02	02.23.15	2nd Building Permit Submittal

2/24/2015 6:11:04 PM

PROJECT NO: 1410
CAD DWG FILE: A420 - INTERIOR ELEVATIONS.DWG
DRAWN BY: A.S, M.M., J.C., J.S.
CHK'D BY: A.S., M.M

COPYRIGHT: TECHNE expressly reserves its common law copyright and other property rights in this document. This document shall not be reproduced, copied, changed or disclosed in any form or manner whatsoever without first obtaining the express written consent of TECHNE.

SHEET TITLE
INTERIOR ELEVATIONS

A421
SHEET -- OF 100

1. REFLECTOR SIGN PANEL SHALL BE CONSTRUCTED OF A MINIMUM .062 (1157MM) THICK ALUMINUM WITH PORCELAIN ENAMEL FINISH WITH "BLUE" BACKGROUND COLOR EQUAL TO NO. 15090 FEDERAL STANDARD 595A
2. 6" X 6" MIN, PICTOGRAM "WHITE" INTERNATIONAL SYMBOL ACCESSIBILITY
3. "WHITE" ARROW, VERIFY DIRECTION
4. ½" WIDE "WHITE" BORDER
5. LETTERING "WHITE" IN COLOR NOT LESS THAN 2" HIGH (CHARACTERS SHALL BE "SANS SERIF"

NOTES:
A. WALL MOUNTED SIGNAGE ASSEMBLY: ATTACH SIGN USING (3) THREE FLATHEAD WOOD SCREWS, (COUNTERSUNK) AND/ OR ADHESIVE
B. SIGN SHALL BE MOUNTED ON THE WALL ADJACENT TO THE LATCH SIDE OF THE DOOR OR ON THE NEAREST ADJACENT WALL 60" ABOVE THE WALKING SURFACE
C. AN EXTERIOR SIGN SHALL BE MOUNTED PERPENDICULAR TO THE PATH OF TRAVEL

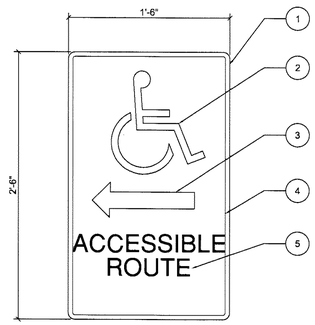

7 A501 ACCESSIBLE ROUTE SIGNAGE DETAIL
1 1/2" = 1'-0"

1. ACRYLIC PLASTIC SHEETS (2) EASED ALL CORNERS
2. 1" HIGH RAISED LETTERS, PER SPECIFICATIONS CHARACTERS WILL BE RAISED FROM THE BACKGROUND 1/32" MIN. (CBC, SEC 117B.5) ("WHITE" TYPICAL)
3. CONTRASTING COLOR BACKGROUND TO BE SELECTED BY ARCHITECT ("BLUE" TYPICAL)
4. ¾" HIGH RAISED LETTERS, PER SPECIFICATIONS (5/8" MIN. - 2" MAX.)
5. RAISED BRAILLE - GRADE 2 (2/10" MIN.) PER SPECIFICATIONS
6. INTERNATIONAL SYMBOL WITH RAISED SURFACE 1/32" MIN. ("WHITE" TYPICAL)

NOTES:
A. ATTACH SIGN USING (4) FOUR FLATHEAD WOOD SCREWS, COUNTERSUNK, AND APPLIED WITH ADHESIVE TO BASE SURFACE
B. SIGN SHALL BE MOUNTED ON THE WALL ADJACENT TO THE LATCH SIDE OF THE DOOR OR ON THE NEAREST ADJACENT WALL 60" ABOVE THE FLOOR
C. LETTER STYLE TO BE SANS-SERIF UPPER CASE ACCOMPANIED BY GRADE 2 BRAILLE
D. COLORS TO BE SELECTED BY ARCHITECT AND APPROVED BY OWNER
E. REFER TO DOOR SCHEDULE FOR TEXT GRAPHICS ON DOORS ARCHITECT TO VERIFY WITH OWNER FOR ROOM LOCATIONS/ NAMES

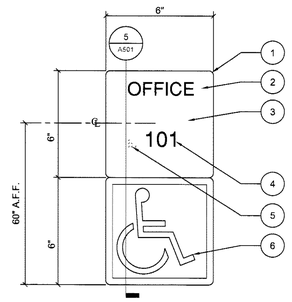

4 A501 ROOM SIGNAGE DETAIL
3" = 1'-0"

1. ACCESSIBLE RESTROOM SIGNAGE
2. ACCESSIBLE ROOM I.D. / SIGN & INTERN'L SYMBOL
3. ACCESSIBLE ROOM I.D.
4. ACCESSIBLE DIRECTION / INFORMATION SIGNAGE
5. ADA APPROVED LEVER STYLE DOOR LATCH
6. WALL MOUNTED AT SIGN INTERIOR OR EXTERIOR OF BUILDING

NOTES:
A. REFER TO DOOR SCHEDULE FOR TEXT GRAPHICS ON DOORS
B. FOR NON ACCESSIBLE AREAS REFER TO
C. INACCESSIBLE SANITARY FACILITIES SHALL HAVE DIRECTIONAL SIGNAGE
D. ROOM IDENTIFICATION SIGNS SHALL BE:
D.A. PLACED ON APPROACH SIDE AS ONE ENTERS ROOM OR SPACE
D.B. PLACED ADJACENT TO DOOR ON LATCH SIDE
D.C. LOCATED WITH CLEAR FLOOR SPACE MINIMUM 18 INCHES BY 18 INCHES - CENTERED ON TACTILE CHARACTERS - PROVIDE BEYOND ARC OF ANY DOOR SWING BETWEEN CLOSED AND 45-DEGREE-OPEN POSITIONS PER CBC FIGURE 11B-703.4.2

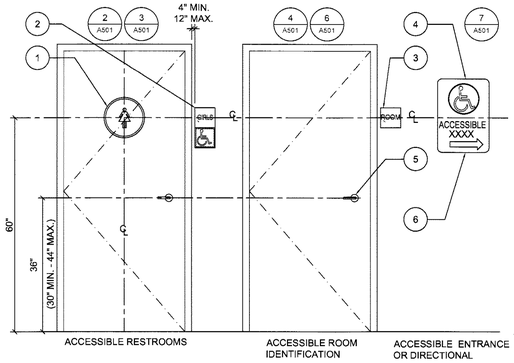

1 A501 ADA SIGNAGE MOUNTING DETAIL
3" = 1'-0"

1. REFLECTOR SIGN PANEL SHALL BE CONSTRUCTED OF A MINIMUM .062 (1157MM) THICK ALUMINUM WITH PORCELAIN ENAMEL FINISH WITH "WHITE" BACKGROUND COLOR EQUAL TO NO. 15090 FEDERAL STANDARD 595A
2. ½" WIDE "BLACK" BORDER
3. LETTERING "BLACK" IN COLOR NOT LESS THAN 4" HIGH (CHARACTERS SHALL BE "SANS SERIF")

NOTES:
A. WALL MOUNTED SIGNAGE ASSEMBLY: ATTACH SIGN USING (3) THREE FLATHEAD WOOD SCREWS, (COUNTERSUNK) AND/ OR ADHESIVE
B. SIGN SHALL BE ILLUMINATED AT NIGHT.

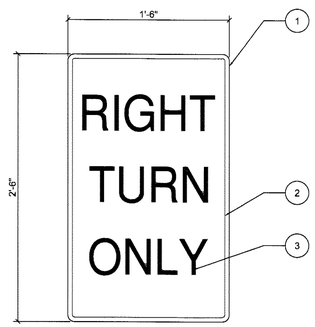

8 A501 RIGHT TURN ONLY SIGN DETAIL
1 1/2" = 1'-0"

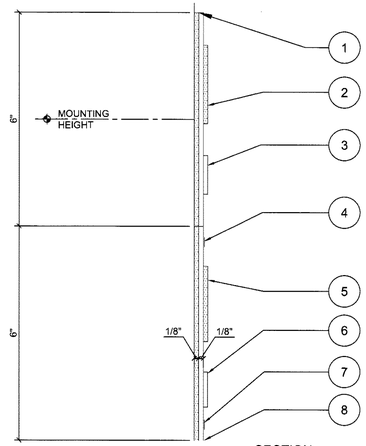

SECTION

1. OPAQUE ACRYLIC PLASTIC BACK - VERIFY COLOR
2. 1" HIGH LETTER CHARACTER WITH RAISED LETTER SURFACE 1/32" HIGH MINIMUM
3. RAISED BRAILLE (GRADE 2)
4. BORDER PAINTED ON INTERIOR FACE OF CLEAR PLASTIC (SHORT DASHED) TOP, BOTTOM AND SIDES
5. 1" HIGH BETTER CHARACTERS OR SYMBOL WITH RAISED SURFACE 1/32" HIGH MINIMUM
6. RAISED BRAILLE - (GRADE 2)
7. CLEAR ACRYLIC PLASTIC
8. LINE OF SURFACE TO BE SECURITY MOUNTED TO

ALSO SEE DETAIL 4 A501

5 A501 ROOM SIGNAGE DETAIL -02
6" = 1'-0"

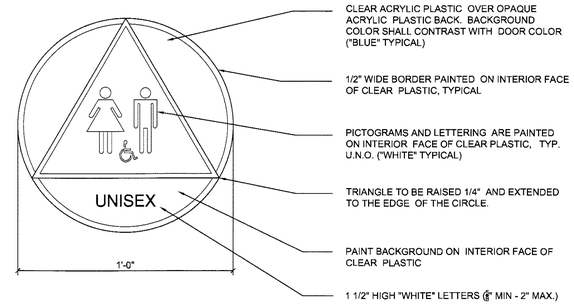

NOTES:
A. ATTACH SIGN USING (3) THREE FLATHEAD WOOD SCREWS,(COUNTERSUNK) AND ADHESIVE. SIGN SHALL BE MOUNTED ON THE WALL ADJACENT TO THE LATCH SIDE OF THE DOOR OR ON THE NEAREST ADJACENT WALL 60" ABOVE THE FLOOR
B. REFER TO SITE ACCESSIBILITY ANALYSIS DRAWING SHEET FOR SIGN LOCATIONS
C. THE SIGN SHALL BE MOUNTED AT 58 INCHES MINIMUM AND 60 INCHES MAXIMUM ABOVE THE FINISH FLOOR SURFACE OR GROUND SURFACE MEASURED FROM THE CENTERLINE OF THE SYMBOL. WHERE A DOOR IS PROVIDED THE SYMBOL SHALL BE MOUNTED WITHIN 1 INCH OF THE VERTICAL CENTERLINE OF THE DOOR.
D. ALL LETTER CHARACTERS SHALL BE "SANS SERIF"

2 A501 ACCESSIBLE SIGNAGE
3" = 1'-0"

9 A501

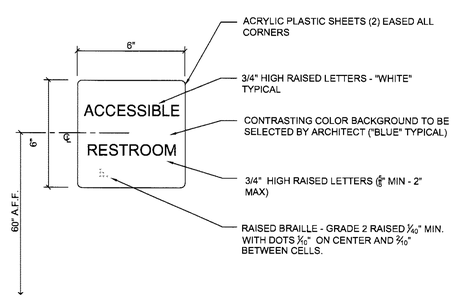

NOTES:
A. ATTACH SIGN USING (4) FOUR FLATHEAD WOOD SCREWS, COUNTERSUNK AND ADHESIVE. SIGN SHALL BE MOUNTED ON THE WALL ADJACENT TO THE LATCH SIDE OF THE DOOR OR ON THE NEAREST ADJACENT WALL 60" ABOVE THE FLOOR
B. LETTER STYLE TO BE "SANS-SERIF" UPPER CASE ACCOMPANIED BY GRADE 2 BRAILLE - COLORS TO BE SELECTED BY ARCHITECT
C. REFER TO DOOR SCHEDULE FOR TEXT GRAPHICS ON DOORS ARCHITECT TO VERIFY WITH DISTRICT FOR ROOM LOCATIONS

6 A501 ACCESSIBLE RESTROOM SIGNAGE DETAIL
3" = 1'-0"

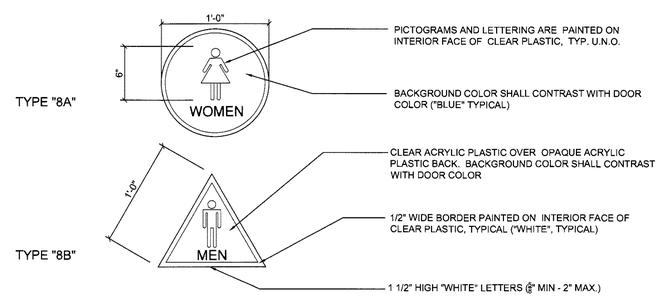

FOR INTERNATIONAL SIGN/ROOM NAME

NOTES:
A. ATTACH SIGN USING (3) THREE FLATHEAD WOOD SCREWS, (COUNTERSUNK) AND ADHESIVE - SIGN SHALL BE MOUNTED ON THE WALL ADJACENT TO THE LATCH SIDE OF THE DOOR OR ON THE NEAREST ADJACENT WALL 60" ABOVE THE FLOOR
B. REFER TO SITE ACCESSIBILITY ANALYSIS DRAWING, SHEET FOR SIGN LOCATIONS
C. ALL LETTER CHARACTERS SHALL BE "SAN SERIF"

FIELD COPY

3 A501 ACCESSIBLE SIGNAGE
1 1/2" = 1'-0"

TECHNE
DESIGN | DEVELOPMENT
3956 30th Street, San Diego, CA 92104
techne-us.com sustainablearchitect.org
o 619-940-5814 m 313-595-5814

CONSULTANTS

LICENSED ARCHITECT
MICHAEL RENE MORTON
C-19371
REN. 04/30/2015
STATE OF CALIFORNIA

414 29th Avenue
Oakland, CA 94601

OWNER

29th Avenue Group, LLC
1211 Embarcadero Way, Suite D
Oakland, CA 94606

BuildZig
Dream it. Build it. Zig it.

MARK	DATE	DESCRIPTION
01	11.10.14	1st Building Permit Submittal
02	02.23.15	2nd Building Permit Submittal

2/4/2015 11:00:42 AM

PROJECT NO: 1410
CAD DWG FILE: ~~A501 DETAILS.DWG~~
DRAWN BY: A.S, M.M., J.C., J.S.
CHK'D BY: A.S., M.M

COPYRIGHT: TECHNE expressly reserves its common law copyright and other property rights in this document. This document shall not be reproduced, copied, changed or disclosed in any form or manner whatsoever without first obtaining the express written consent of TECHNE

SHEET TITLE
DETAILS

A501

A AT SLOPING FLOOR TRANSITION

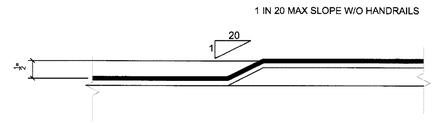

B AT THRESHOLD OR CHANGE OF FLOORING MATERIALS

4 A502 ACCESSIBLE ROUTE CHANGES IN LEVEL
6" = 1'-0"

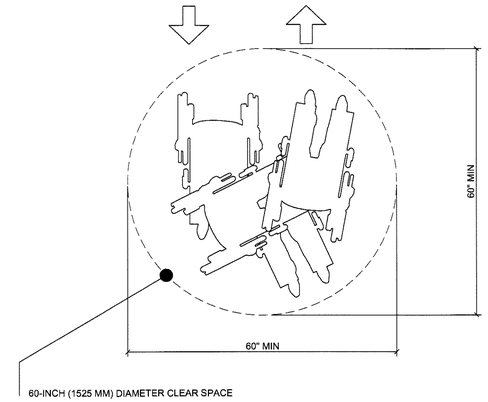

1 A502 WHEELCHAIR TURNING SPACE
3/4" - 1'-0"

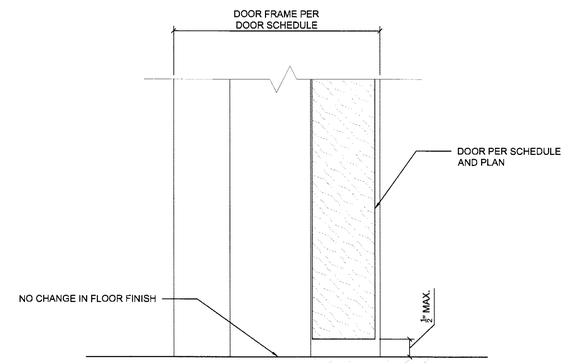

5 A502 INTERIOR DOOR SILL DETAIL
6" = 1'-0"

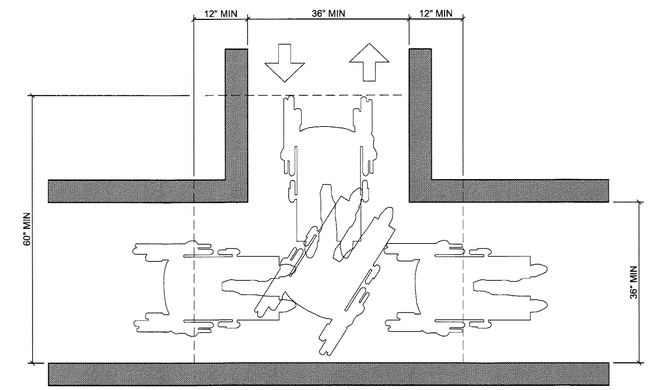

2 A502 WHEELCHAIR TURNING SPACE
3/4" - 1'-0"

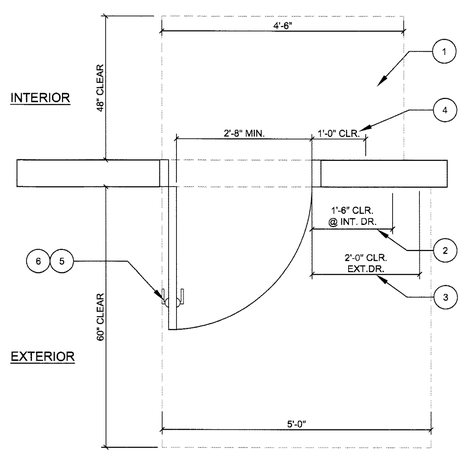

1. CLEAR LANDING AREA AT EXTERIOR DOORS MAX. 1/4" PER FOOT SLOPE IN ANY DIRECTION OVER LANDING AREA FLOOR LEVEL ON EITHER SIDE OF DOOR TO BE NO GREATER THAN 1/2" LOWER THAN THE THRESHOLD
2. PULL SIDE STRIKE EDGE 18" CLEARANCE REQ. FOR INTERIOR
3. PULL SIDE STRIKE EDGE 24" CLEARANCE REQ. FOR EXTERIOR
4. PUSH SIDE STRIKE EDGE CLEARANCE REQ. FOR DOORS WITH CLOSURES AND LATCHES
5. ADA COMPLAINT LEVER STYLE DOOR HARDWARE
6. HANDLE LATCH SHALL BE CENTERED BETWEEN (MIN. 30" TO 44") STANDARD AT 36" ABOVE FINISHED FLOOR

NOTES:
A. REFER TO FLOOR PLAN FOR ACTUAL DOOR SWING AND WALL CONFIGURATIONS
B. REFER TO DOOR SCHEDULE FOR ACTUAL DOOR SIZE AND SWING

6 A502 ADA DOOR CLEARANCE WIDTH & DEPTH
3/4" - 1'-0"

NOTES:
A. Wheel Passage width. The minimum clear width for singe wheelchair passage shall be 32 inches at a point and 36 inches continuously (Per CBC Section 1118B.1)

B. Corridor and Hall Widths. Every corridor and hallway serving an occupant load of 10 or more shall not be less that 44 inches in width. Corridors and hallways serving an occupant load of less than 10 shall not be less than 36 inches in width. (CBC 1133B.3.1)

C. GROUP B OCCUPANCIES: Miscellaneous general standards
A. Circulation aisles and pedestrian ways shall be sized according to functional requires and in no case shall be less than 36 inches in clear width. (CBC 1105B.3.6)
D. Storage areas. The doorway providing access to such areas shall not be less that 32 inches in clear width. Storage area shall be made accessible in the number and dimensions provided in Section 1125B

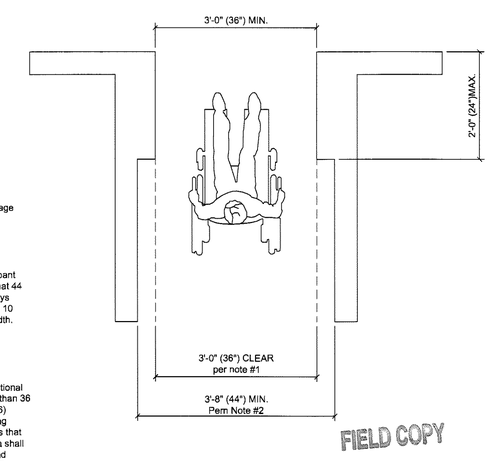

FIELD COPY

3 A502 MINIMUM INTERIOR CLR. WIDTH FOR DP. ACCESS
3/4" - 1'-0"

7 A502

8 A502

9 A502

TECHNE
DESIGN | DEVELOPMENT
3956 30th Street, San Diego, CA 92104
techne-us.com sustainablearchitect.org
o 619-940-5814 m 313-595-5814

CONSULTANTS

LICENSED ARCHITECT
MICHAEL RENE MORTON
C-19371
REN. 04/30/2015
STATE OF CALIFORNIA

414 29th Avenue
Oakland, CA 94601

OWNER

29th Avenue Group, LLC
1211 Embarcadero Way, Suite D
Oakland, CA 94606

BuildZig
Dream it. Build it. Zig it.

MARK	DATE	DESCRIPTION
01	11.10.14	1st Building Permit Submittal
02	02.23.15	2nd Building Permit Submittal

04/29/15 11:00:42 AM

PROJECT NO: 1410
CAD DWG FILE: ~~A501 DETAILS.DWG~~
DRAWN BY: A.S., M.M., J.C., J.S.
CHK'D BY: A.S., M.M

COPYRIGHT: TECHNE expressly reserves its common law copyright and other property rights in this document. This document shall not be reproduced, copied, changed or disclosed in any form or manner whatsoever without first obtaining the express written consent of TECHNE.

SHEET TITLE
DETAILS

A502

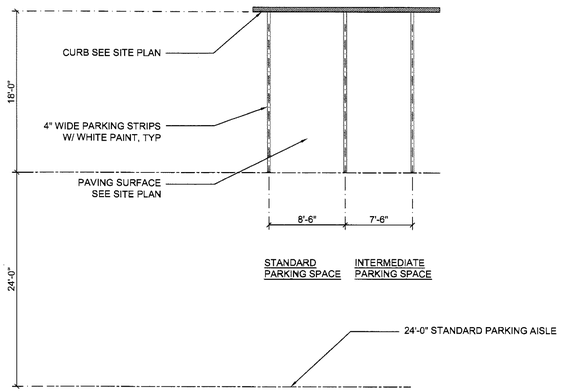

NOTES:
A. FOR SURFACE TREATMENT OF CURB FACE SEE SITE PLAN
B. REFER TO SITE PLAN FOR PARKING LAYOUT

7 / A503 90 DEGREE STANDARD PARKING
1/8" = 1'-0"

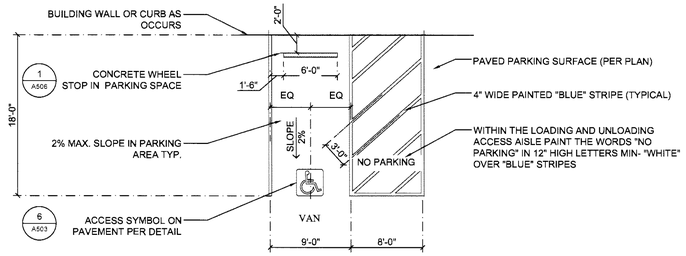

NOTES:
A. SURFACE SLOPES OF ACCESSIBLE PARKING SPACES AND ASSESSABLE AISLES SHALL BE THE MINIMUM POSSIBLE AND SHALL NOT EXCEED 1 UNIT VERTICAL TO 50 UNITS HORIZONTAL (2% slope) IN ANY DIRECTION. (CBC SEC. 1129B.3-3, 1129B.3-4)
B. FOR APPROPRIATE RAMP ALTERNATE - CONFORM TO TOPOGRAPHICAL CONDITIONS, SEE SAN DIEGO COUNTY REGIONAL STANDARD DRAWING G-27 THROUGH G-30.
C. BLUE COLOR SHOULD MATCH COLOR NO. 15090 IN THE FEDERAL STANDARD 595a AS SPECIFIED IN SECTIONS 522 (b) S.
D. IF ONLY ONE ACCESSIBLE PARKING STALL IS GOING TO BE PROVIDED, THE ACCESS AISLE SHALL BE 8' (VAN ACCESSIBLE) AND LOCATED ON THE PASSENGER SIDE.
E. SIDEWALK CROSS SLOPE SHALL NOT EXCEED 2.0%.
F. LETTERS CHARACTERS SHALL BE "SANS SERIF"

4 / A503 VAN ACCESSIBLE DP 90 DEGREE PARKING
1/8" = 1'-0"

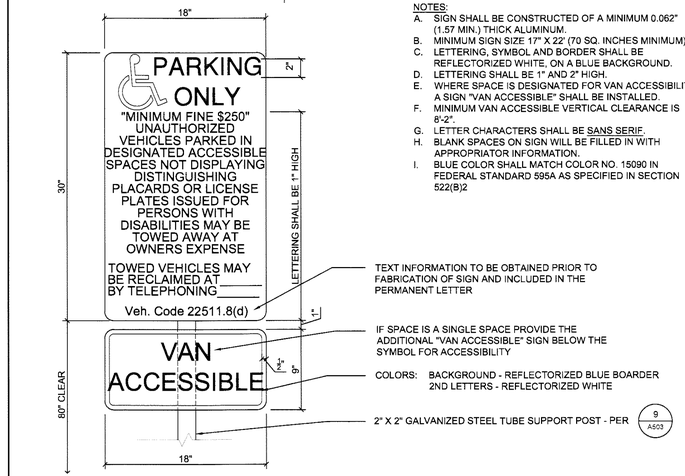

NOTES:
A. SIGN SHALL BE CONSTRUCTED OF A MINIMUM 0.062" (1.57 MIN.) THICK ALUMINUM.
B. MINIMUM SIGN SIZE 17" X 22' (70 SQ. INCHES MINIMUM)
C. LETTERING, SYMBOL AND BORDER SHALL BE REFLECTORIZED WHITE, ON A BLUE BACKGROUND.
D. LETTERING SHALL BE 1" AND 2" HIGH.
E. WHERE SPACE IS DESIGNATED FOR VAN ACCESSIBILITY, A SIGN "VAN ACCESSIBLE" SHALL BE INSTALLED.
F. MINIMUM VAN ACCESSIBLE VERTICAL CLEARANCE IS 8'-2".
G. LETTER CHARACTERS SHALL BE SANS SERIF.
H. BLANK SPACES ON SIGN WILL BE FILLED IN WITH APPROPRIATOR INFORMATION.
I. BLUE COLOR SHALL MATCH COLOR NO. 15090 IN FEDERAL STANDARD 595A AS SPECIFIED IN SECTION 522(B)2

1 / A503 DP PARKING ONLY SIGNAGE
1 1/2" = 1'-0"

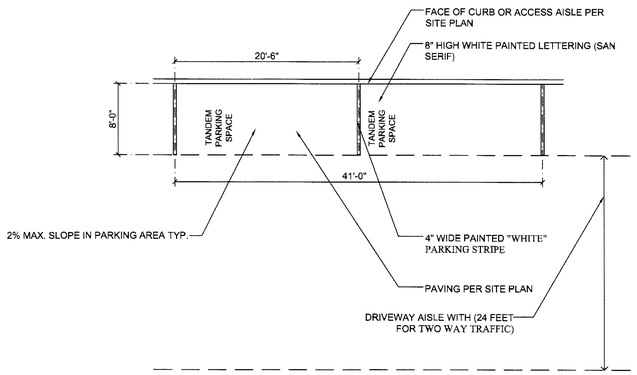

NOTES:
A. REFER TO SITE PLAN FOR PARKING AND DRIVEWAY CONFIGURATION
B. FOR SURFACE TREATMENT OF CURB FACE SEE SITE PLAN

8 / A503 TANDEM PARKING SPACE - PARALLEL
1/8" = 1'-0"

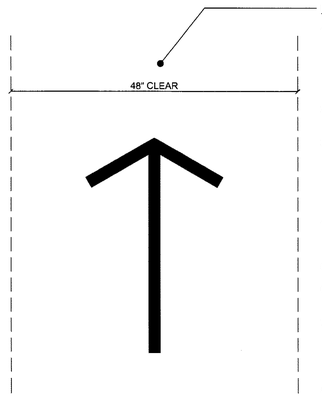

PATH OF TRAVEL NOTES

1. Accessible Route of Travel shall be provided to all portion of the building to accessible building entrances, and between the building and the public way. At least on accessible route with in the boundary of the site shall be provided from the pubic transportation stops, accessible parking and accessible passenger loading zones and public streets or sidewalk to the accessible building entrance they serve. CBC Section 1114B.1.2
2. Primary entry access. All entrances and exterior ground exists shall be accessible to the disabled per applicable ADA requirements. CBC Section 1114B1.3
3. Walks and sidewalks have a continuous common surface, not interrupted by steps or by abrupt changes in level exceeding 1/2" and shall be a minimum of 48" inches width. If walk or sidewalk has less than 60 inches, clear width than passing spaces of at least 60 inches by 60 inches shall be located ate reasonable intervals not to exceed 200 feet. A T-intersection is an acceptable passing place. CBC Section 1133B.7.1
4. Surfaces including walks and sidewalks, shall have slip resistant surfaces. Surfaces with a lop of less than 6% percent gradient shall be at leas a slip resistant as that described as a medium salted concrete finish. CBC Section 1133B.7.1.1
5. Surface cross slopes shall not exceed one unit vertical in 50 units horizontal (2- percent slope). CBC Section 1133B7.1.3
6. When the slope in the direction of travel of any walk exceeds one vertical unit to 20 units horizontal (5%) it shall comply with the provision for pedestrian ramps (see ramp notes).
7. Changes in Level. Changes in level up to ¼ inches my be vertical and without edge treatment. Changes in level between ¼" and ½ inch shall be beveled with a slop no greater than 1:2. Changes in level greater that ½ inch shall be accomplished by means of a curb ramp, ramp elevator or platform lift. CBC Section 1124B.2
8. The Contractor shall verify that the path of travel indicated conform to this criteria.

5 / A503 EXTERIOR ACCESSIBLE PATH OF TRAVEL
1" = 1'-0"

NOTES:
A. TRUNCATED DOMES PER CBC 2013 Figure 11B-705.1
A.A. Minimum 0.9-inch and maximum 0.92-inch base diameter.
A.B. Minimum 0.45-inch and maximum 0.47-inch top diamter.
A.C. Minimum 0.18-inch and maximum 0.22-inch height.
A.D. Minimum 2.3-inch and maximum 2.4-inch center-to-center spacing and minimum 0.65-inch base-to-base spacing.
B. Color shall be yellow conforming to FS33538 of Federal Standard 595C and integral to surface.
C. DURING AND AFTER THE TILE INSTALLATION AND THE CONCRETE CURING STAGE, IT IS IMPERATIVE THAT THERE IS NO WALKING, LEANING OR EXTERNAL FORCES PLACED ON THE TILE TO ROCK THE TILE, CAUSING A VOID BETWEEN THE UNDERSIDE OF TILE AND CONCRETE
D. LOCATION PER SITE PLAN
E. INSTALL PER MANUFACTURER'S INSTALLATION INSTRUCTIONS

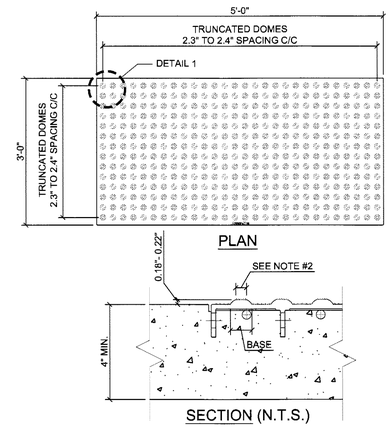

2 / A503 TACTILE WARNING SURFACE TILE
1" = 1'-0"

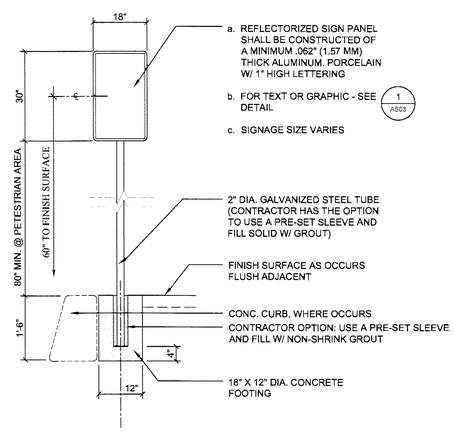

NOTE:
A. PROVIDE (2) TWO FACEPLATE BACK-TO-BACK WHEN SIGN POST IS PERPENDICULAR TO PATH OF TRAVEL

9 / A503 ACCESS ENTRY SIGNAGE
1/2" = 1'-0"

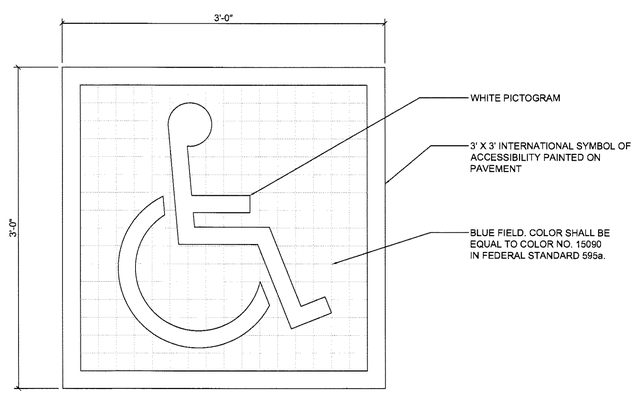

NOTE:
GRID LINES ARE SHOWN FOR PROPORTION ONLY AND ARE NOT TO APPEAR AS PART OF SYMBOL. DISABLED SIGNAGE SHALL COMPLY WITH SECTION 7102 TITLE 24 CCR.

6 / A503 ACCESSIBLE PARKING PAVEMENT SYMBOL DETAIL
1 1/2" = 1'-0"

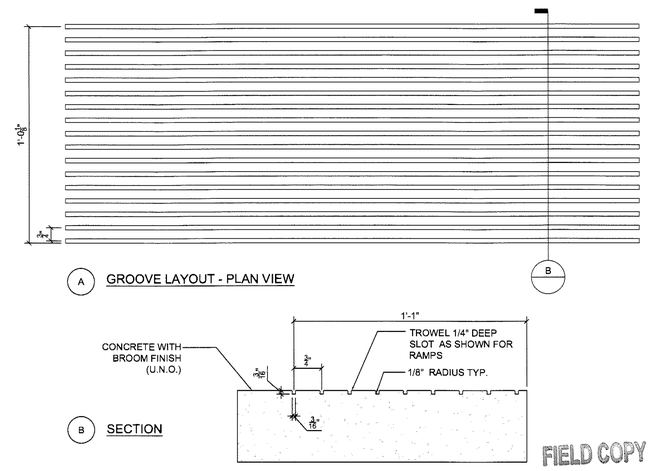

3 / A503 GROOVING DETAIL
3" = 1'-0"

TECHNE
DESIGN | DEVELOPMENT
3956 30th Street, San Diego, CA 92104
techne-us.com sustainablearchitect.org
o 619-940-5814 m 313-595-5814

CONSULTANTS

LICENSED ARCHITECT
MICHAEL RENE MORTON
C-19371
REN. 04/30/2015
STATE OF CALIFORNIA

414 29th Avenue
Oakland, CA 94601

OWNER

29th Avenue Group, LLC
1211 Embarcadero Way, Suite D
Oakland, CA 94606

BuildZig
Dream it. Build it. Zig it.

MARK	DATE	DESCRIPTION
01	11.10.14	1st Building Permit Submittal
02	02.23.15	2nd Building Permit Submittal

2/4/2015 11:00:42 AM

PROJECT NO: 1410
CAD DWG FILE: A501 SETAILS.DWG
DRAWN BY: A.S, M.M., J.C., J.S.
CHK'D BY: A.S., M.M

COPYRIGHT: TECHNE expressly reserves its common law copyright and other property rights in this document. This document shall not be reproduced, copied, changed or disclosed in any form or manner whatsoever without first obtaining the express written consent of TECHNE

SHEET TITLE
DETAILS

A503

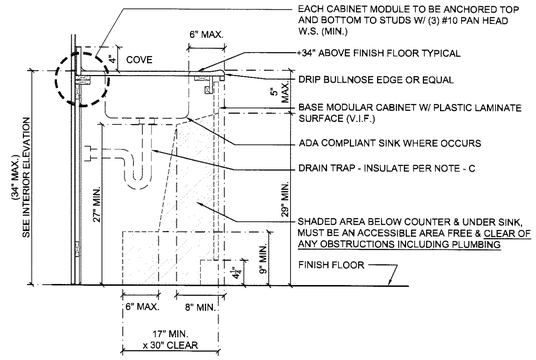

NOTES:
A. FAUCET & CONTROL MECHANISMS SHALL BE OPERABLE W/ ONE HAND & SHALL NOT REQUIRE GRASPING, PINCHING OR TWISTING OF THE WRIST
B. FORCE REQUIRED TO ACTIVATE CONTROLS SHALL BE NO MORE THAN 5 LBS. LEVER OPERATED, PUSH TYPE & ELECTRONICALLY CONTROLLED MECHANISMS ARE ACCEPTABLE - SELF CLOSING VALVES ARE ALLOWED IF THE FAUCET REMAINS OPEN FOR AT LEAST 10 SECONDS
C. HOT WATER & DRAIN PIPES UNDER ACCESSIBLE LAVATORIES SHALL BE INSULATED OR OTHERWISE COVERED - THERE SHALL BE NO SHARP OR ABRASIVE OBJECTS OR SURFACES UNDER LAVATORIES

7 / A504 BASE CABINET W/ SINK - ADA CLEARANCE
1" = 1'-0"

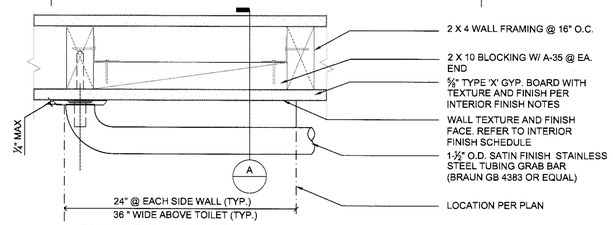

RAILING END - PLAN VIEW

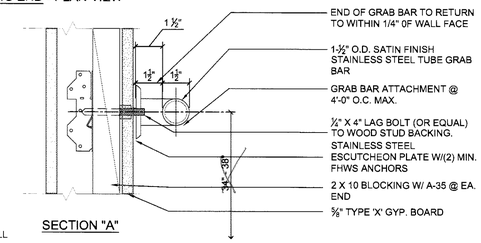

NOTE:
A. SEAL AND CAULK ALL PENETRATIONS @ INTERIOR WALL

SECTION "A"

4 / A504 GRAB BAR TO WOOD WALL DETAIL
3" = 1'-0"

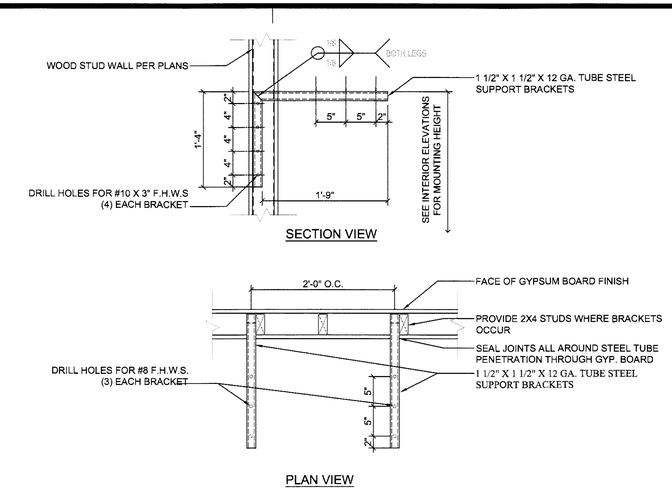

1 / A504 COUNTER SUPPORT DETAIL - WOOD
1" = 1'-0"

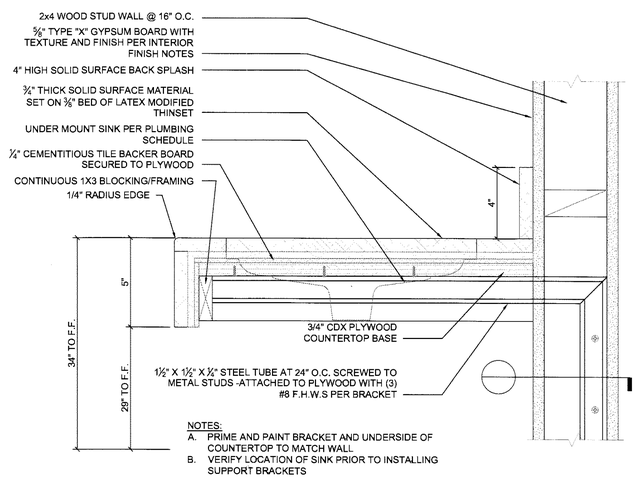

NOTES:
A. PRIME AND PAINT BRACKET AND UNDERSIDE OF COUNTERTOP TO MATCH WALL
B. VERIFY LOCATION OF SINK PRIOR TO INSTALLING SUPPORT BRACKETS

8 / A504 CANTILEVER COUNTER DETAIL
3" = 1'-0"

ABBREVIATION DESCRIPTION:

SOAP DISPENSER	SD
URINAL SCREEN	US
TOILET PARTITION	TP
SEAT COVER DISPENSER	SCD
TOILET PAPER DISPENSER-1	TPD-1
TOILET PAPER DISPENSER-2	TPD-2

(Toilet paper dispensers shall be positioned with centerline minimum 7" inches and maximum 9 inches from front edge of toilet seat. Mounting height shall be min. 19" above floor)

WATER CLOSET	WC
URINAL	U
MIRROR (24"X36")	M
LAVATORY	LAV
PAPER TOWEL DISPENSER	PTD
COAT HOOK	H
ELECTRIC HAND DRYER	HD

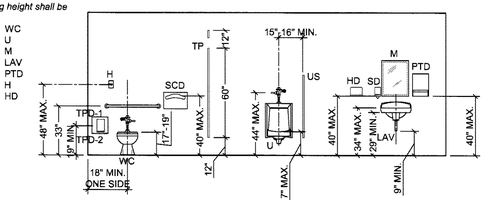

A FOR DISABLED PERSONS (DP) INSTALLATION

NOTES:
A. REFER TO ENLARGED PLAN FOR FLOOR ARRANGEMENTS
B. SEE OTHER ADA DETAILS FOR TOILET FACILITIES

5 / A504 FIXTURE MOUNTING HEIGHT DETAIL
1/4" = 1'-0"

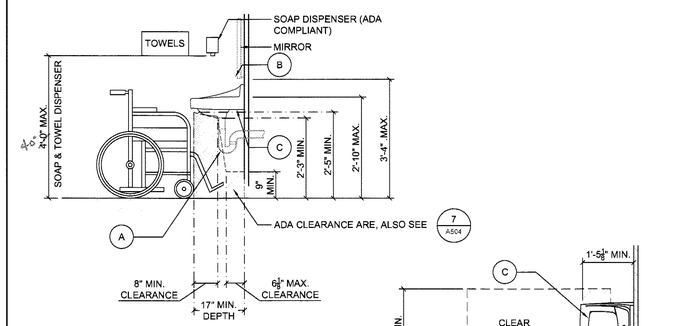

NOTES:
A. EXPOSED HOT WATER AND DRAIN LINES SHALL BE INSULATED OR OTHERWISE COVERED BY TRUEBRO "LAV QUARD 2" OR EQUAL. THERE SHALL NO BE SHARP OR ABRASIVE SURFACES UNDER LAVATORIES
B. ADA COMPLIANT SINK LEVER
C. ADA COMPLIANT SINK (WALL HUNG SHOWN)

2 / A504 ADA LAVATORY CLEARANCES & REQUIREMENTS
1/2" = 1'-0"

9 / A504

1. 1X6 PORCELAIN BULLNOSE TILE
2. 6X6 PORCELAIN FIELD TILE
3. 1X6 PORCELAIN COVE TILE
4. APPLY A CONTINUOUS BEAD OF SEALANT @ TILE TO WALL
5. ⅛" TILE GROUT JOINT
6. ⅝" TYPE "X" WATER RESISTANT "GREEN" GYPSUM BOARD
7. ½" OR ⅝" CEMENTITIOUS TILE BACKER BOARD, SECURED TO FRAMING
8. ¼" LATEX MODIFIED THIN SET
9. STUD WALL @ 16" O.C. PER PLAN

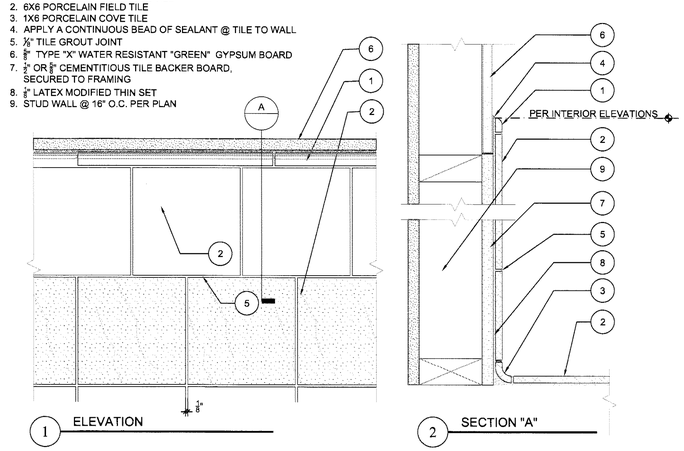

1 ELEVATION

2 SECTION "A"

6 / A504 TILE WAINSCOT PATTERN DETAIL
3" = 1'-0"

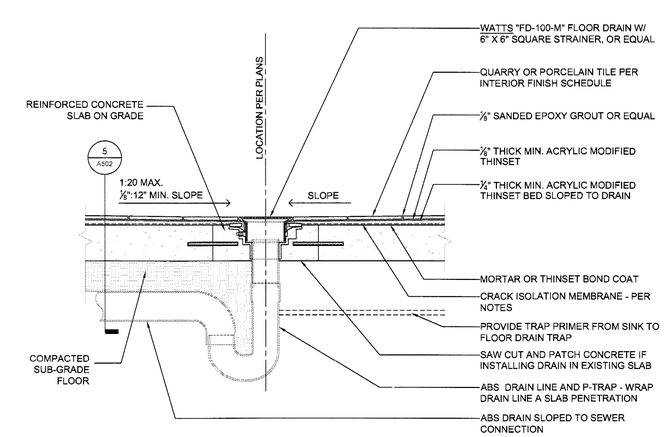

3 / A504 DRAIN IN CONCRETE SUBSTRATE
1 1/2" = 1'-0"

FIELD COPY

TECHNE
DESIGN | DEVELOPMENT
3956 30th Street, San Diego, CA 92104
techne-us.com sustainablearchitect.org
o 619-940-5814 m 313-595-5814

CONSULTANTS

LICENSED ARCHITECT MICHAEL RENE MORTON C-19371 REN. 04/30/2015 STATE OF CALIFORNIA

414 29th Avenue
Oakland, CA 94601

OWNER

29th Avenue Group, LLC
1211 Embarcadero Way, Suite D
Oakland, CA 94606

BuildZig
Dream it. Build it. Zig it.

MARK	DATE	DESCRIPTION
01	11.10.14	1st Building Permit Submittal
02	02.23.15	2nd Building Permit Submittal

2/4/2015 11:00:43 AM

PROJECT NO: 1410
CAD DWG FILE: ~~A501 DETAILS.DWG~~
DRAWN BY: A.S., M.M., J.C., J.S.
CHK'D BY: A.S., M.M

COPYRIGHT: TECHNE expressly reserves its common law copyright and other property rights in this document. This document shall not be reproduced, copied, changed or disclosed in any form or manner whatsoever without first obtaining the express written consent of TECHNE.

SHEET TITLE
DETAILS

A504

NOTES:
A. SEE INTERIOR FINISH SCHEDULE FOR WALL FINISH
B. VERIFY WALL FIRE RATING PRIOR TO ORDERING
C. FIRE RATED UNITS BY APEX OR SAFEGUARD OR EQUAL U.N.O.

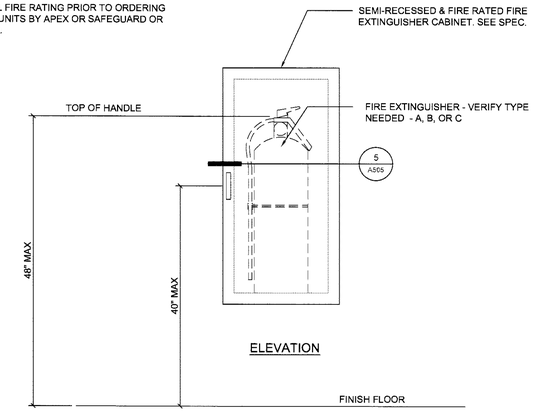

4 A505 FIRE EXTINGUISHER CABINET DETAIL
3" = 1'-0"

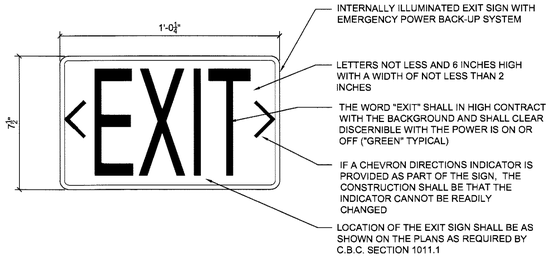

NOTES:
A. WIRE AND ATTACH SIGN PER MANUFACTURERS INSTRUCTIONS
B. THE FACE OF THE EXIT SHALL HAVE AN INTENSITY OF NOT LESS THAN 5 FOOT-CANDLES BY CBC SECTION 1011.5.2
C. THE SIGN SHALL BE ILLUMINATED AT ALL TIMES, AND HAVE NO LESS THAT 90 MINUTES EMERGENCY POWER SYSTEM - BATTERY BACK-UP BY CBC SECTION 1011.5.3
D. WHERE FLOOR LEVEL SIGNS ARE REQUIRED THEY SHALL BE WITHIN 4 INCHES OF THE THE DOOR FRAME

1 A505 EMERGENCY EXIT SIGN DETAIL
3" = 1'-0"

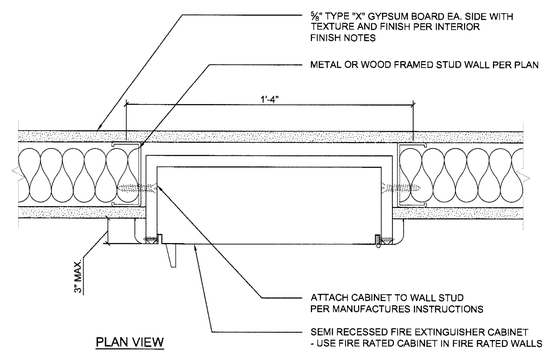

NOTES:
A. VERIFY OPENING SIZE WITH FIRE EXTINGUISHER CABINET
B. VERIFY WALL FIRE RATING PRIOR TO ORDERING EXTINGUISHER CABINET TYPE
C. FIRE RATED UNITS BY APEX OR SAFEGUARD OR EQUAL U.N.O.

ALSO SEE 4 A505

5 A505 FIRE CABINET DETAIL
3" = 1'-0"

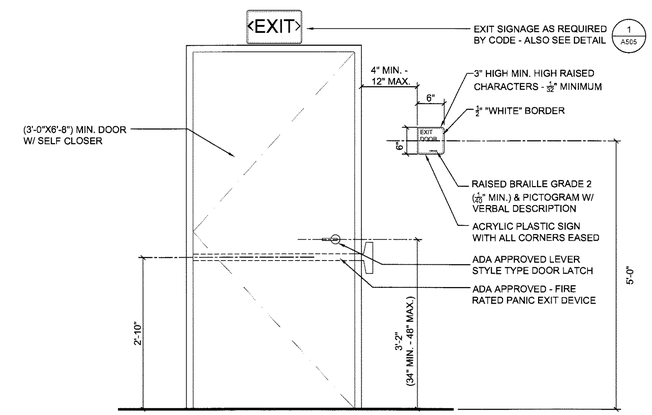

NOTES:
A. CHARACTERS SHALL HAVE A WIDTH TO HEIGHT RATIO OF 3:5 AND 1:5 AND 1:10
B. FINISH OF CHARACTERS & BACKGROUND SHALL BE OF CONTRASTING COLORS
C. REFER TO THE CODE COMPLIANCE PLAN FOR LOCATION OR DOOR SCHEDULE FOR TITLE AND GRAPHICS
D. CHARACTER LETTERING SHALL BE "SANS SERIF"

2 A505 EXIT SIGNAGE
3/4" - 1'-0"

FIELD COPY

TECHNE
DESIGN | DEVELOPMENT
3956 30th Street, San Diego, CA 92104
techne-us.com sustainablearchitect.org
o 619-940-5814 m 313-595-5814

CONSULTANTS

LICENSED ARCHITECT
MICHAEL RENE MORTON
C-19371
REN. 04/30/2015
STATE OF CALIFORNIA

414 29th Avenue
Oakland, CA 94601

OWNER

29th Avenue Group, LLC
1211 Embarcadero Way, Suite D
Oakland, CA 94606

BuildZig
Dream it. Build it. Zig it.

APPROVED
CITY OF OAKLAND

MARK	DATE	DESCRIPTION
01	11.10.14	1st Building Permit Submittal
02	02.23.15	2nd Building Permit Submittal

2/4/2015 11:00:43 AM

PROJECT NO: 1410
CAD DWG FILE: A501 DETAILS.DWG
DRAWN BY: A.S, M.M., J.C., J.S.
CHK'D BY: A.S., M.M

COPYRIGHT: TECHNE expressly reserves its common law copyright and other property rights in this document. This document shall not be reproduced, copied, changed or disclosed in any form or manner whatsoever without first obtaining the express written consent of TECHNE.

SHEET TITLE
DETAILS

A505
SHEET 41 OF 100

NOTES:
1. STUCCO OR OTHER EXTERIOR WALL FINISH SHALL ALIGN WITH CONCRETE FLOOR SYSTEM AND WALL BELOW WHEN AT OR NEAR PROPERTY LINE.

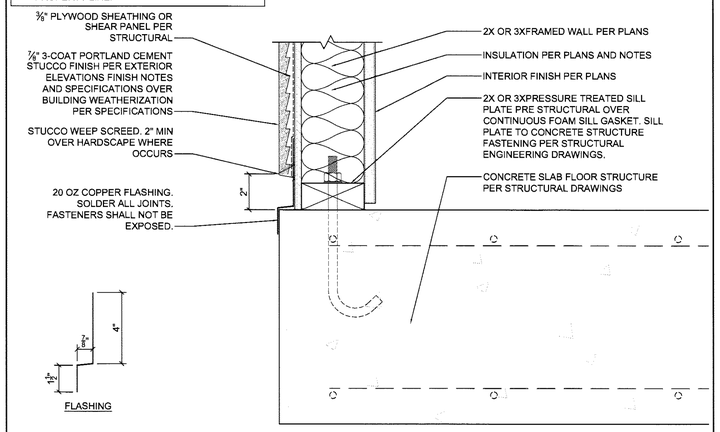

4 / A506 WOOD TO CONCRETE STRUCTURE TRANSITION
3" = 1'-0"

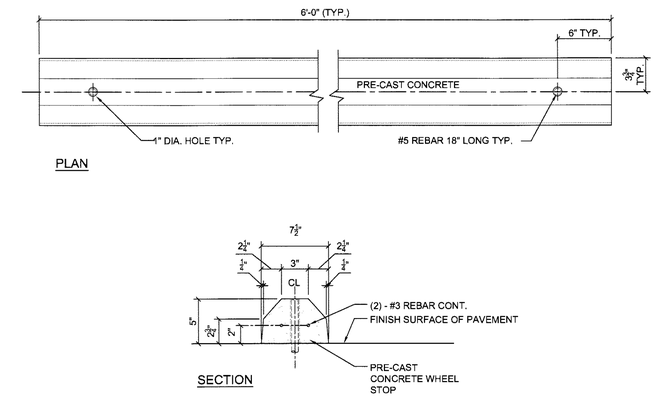

1 / A506 CONCRETE BUMPER DETAIL
1 1/2" = 1'-0"

7 / A506

3 HOUR FIRE RATING PER CBC 2013, TABLE 721.1(3), ITEM NUMBERS 1-1.1, 2-1.1, 3-1.1 AND 4-1.1

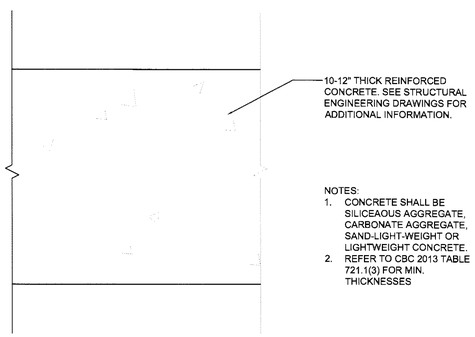

NOTES:
1. CONCRETE SHALL BE SILICEAOUS AGGREGATE, CARBONATE AGGREGATE, SAND-LIGHT-WEIGHT OR LIGHTWEIGHT CONCRETE.
2. REFER TO CBC 2013 TABLE 721.1(3) FOR MIN. THICKNESSES

8 / A506 3 HOUR RATED FLOOR ASSEMBLY
3" = 1'-0"

CHANGE IN ELEVATION:
- 1" CHANGE IN ELEVATION AT EXTERIOR DOORS.
- 3" CHANGE IN ELEVATION AT OTHER LOCATIONS ADJACENT TO BUILDING SLAB

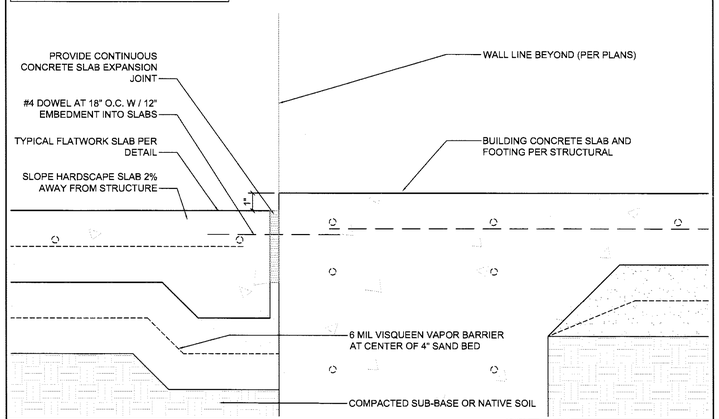

5 / A506 SLAB TRANSITION AT HARDSCAPE DETAIL
3" = 1'-0"

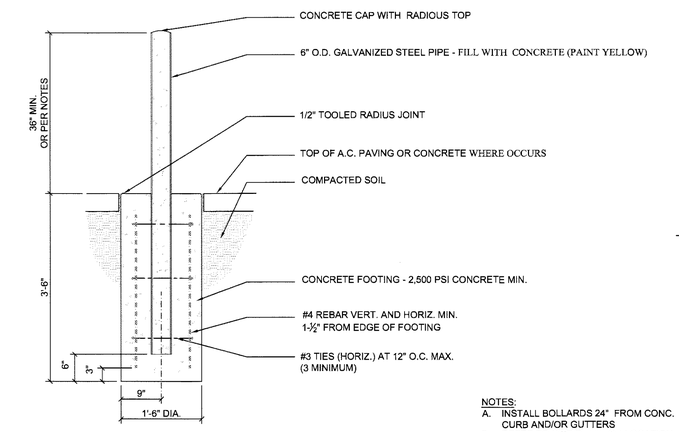

NOTES:
A. INSTALL BOLLARDS 24" FROM CONC. CURB AND/OR GUTTERS
B. REFER TO SITE PLAN FOR LOCATION

2 / A506 CONCRETE FILLED STEEL BOLLARD
3/4" - 1'-0"

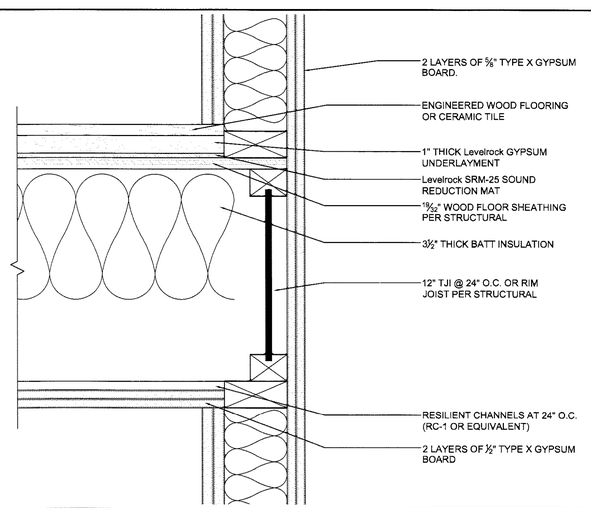

9 / A506 2-Hour Rated Shaft to 1-Hour Rated Floor Intersection
3" = 1'-0"

NOTE:
INSTALLATION SHALL BE DONE IN ACCORDANCE WITH ASTM E1643

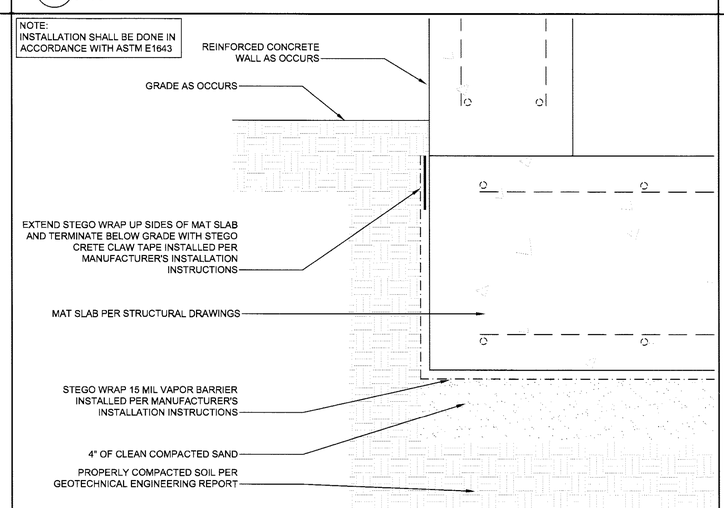

6 / A506 MAT SLAB VAPOR BARRIER DETAIL
3" = 1'-0"

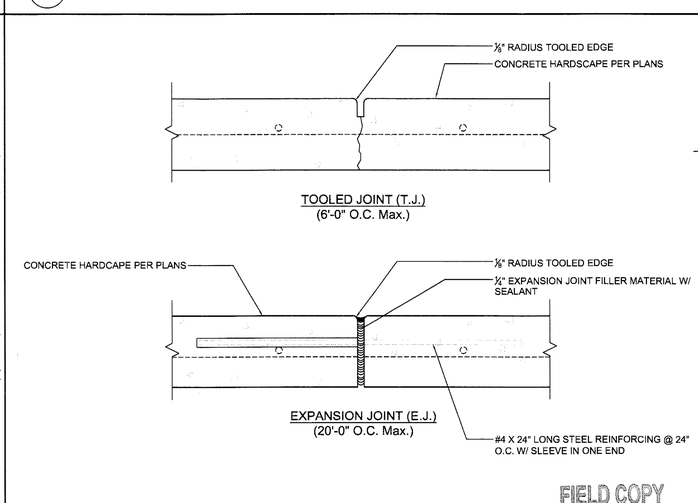

FIELD COPY

3 / A506 CONCRETE SLAB JOINTS DETAIL
3" = 1'-0"

TECHNE
DESIGN | DEVELOPMENT
3956 30th Street, San Diego, CA 92104
techne-us.com sustainablearchitect.org
O 619-940-5814 m 313-595-5814

CONSULTANTS

LICENSED ARCHITECT
MICHAEL RENE MORTON
C-19371
REN. 04/30/2015
STATE OF CALIFORNIA

414 29th Avenue
Oakland, CA 94601

OWNER

29th Avenue Group, LLC
1211 Embarcadero Way, Suite D
Oakland, CA 94606

BuildZig
Dream it. Build it. Zig it.

MARK	DATE	DESCRIPTION
01	07.17.14	30% - Design Development Submittal
02	08.04.14	Revised Elevator
03	08.15.14	Client Plan Revision
04	08.28.14	90% - Design Development Submittal
05	09.11.14	Client Plan Revision
06	11.10.14	1st Building Permit Submittal

2/26/2015 6:07:42 PM

PROJECT NO: 1410
CAD DWG FILE: A506 DETAILS.DWG
DRAWN BY: A.S, M.M., J.C., J.S.
CHK'D BY: A.S., M.M

COPYRIGHT: TECHNE expressly reserves its common law copyright and other property rights in this document. This document shall not be reproduced, copied, changed or disclosed in any form or manner whatsoever without first obtaining the express written consent of TECHNE.

SHEET TITLE
DETAILS

A506

STAIR ENCLOSURE IDENTIFICATION SHALL BE PLACED AT THE TOP OF THE SIGN. LETTERS SHALL BE A MIMINUM OF 1½" IN HEIGHT BLOCK LETTERING WITH ½" STROKES (CBC SEC. 1022.8.1.2)

STAIR UPPER TERMINUS, SUCH AS "ROOF ACCESS" OR "NO ROOF ACCESS" SHALL BE PLACED UNDER THE STAIRWAY IDENTIFICATION IN 1" HIGH BLOCK LETTERING WITH ½" STROKES. (CBC SEC. 1022.8.1.5

NUMBERS DESIGNATING FLOOR LEVEL SHALL BE MINIMUM OF 5" IN HEIGHT WITH ¾" STROKES AND LOCATED IN CENTER OF SIGN. THE MEZZANINE LEVELS SHALL HAVE THE LETTER "M" PRECEDING THE FLOOR LEVEL. BASEMENT LEVELS SHALL HAVE THE LETTER "B" PRECEDING THE FLOOR NUMBER. (CBC SEC. 1022.8.1.3)

THE LOWER AND UPPER TERMINUS OF THE STAIRWAY SHALL BE PLACED AT THE BOTTOM OF THE SIGN IN 1" HIGH BLOCK LETTERING WITH ½" STROKES. (CBC SEC. 1022.8.6)

GRADE 2 BRAILLE

NOTES:
A. ALL OTHER LETERING AND NUMBERS SHALL BE A MINIMUM OF 1" IN HEIGHT. (CBC SEC. 1022.8.1.4)
B. CHARACTERS AND THEIR BACKGROUND SHALL HAVE A NONGLARE FINISH. CHARACTERS SHALL CONTRAST WITH THEIR BACKGROUND, WITH EITHER LIGHT CHARACTERS ON A DARK BACKGROUND OR DARK CHARACTERS ON A LIGHT BACKGROUND (CBC SEC. 1022.8.1.7)
C. WHEN SIGNS REQUIRED BY SECTION 1022.8 ARE INSTALLED IN INTERIOR EXIT ENCLOSURES OF BUILDINGS SUBJECT TO SECTION 1024, THE SIGNS SHALL BE MADE OF THE SAME MATERIALS AS REQUIRED BY SECTION 1024.4. (CBC SEC. 1022.8.1.8)
D. AT EXIT DISCHARGE LEVEL, THE SIGN SHALL INCLUDE A RAISED FIVE POINTED STAR LOCATED TO THE LEFT OF THE IDENTIFYING FLOOR LEVEL. OUTSIDE DIAMETER OF THE STAR SHALL BE THE SAME AS THE HEIGHT OF THE RAISED CHARACTERS

7 / A507 TACTILE STAIR IDENTIFICATION
3" = 1'-0"

NOTES:
1. ELEVATOR SHALL BE SCHINDLER 330A 4,000lbs MODEL U.N.O., FRONT-REAR OPENING
2. OWNER TO SELECT CABIN INTERIOR FINISH MATERIALS AND SUBMIT FOR REVIEW TO TECHNE
3. All designs, clearances, construction, workmanship and materials shall comply with the latest applicable ASME A17 and CSA B44 elevator and escalator codes and standards, NFPA 70 National Electric Code, ICC International Building Code, ICC/ANSI A117.1, and Federal ADA/ABA accessibility standards and guidelines.
4. REFER TO ADDITIONAL DETAILS FOR ELEVATOR SIGNAGE, CONTROLS AND OTHER REQUIREMENTS
5. DOOR SHALL BE 1½" FIRE RATED.

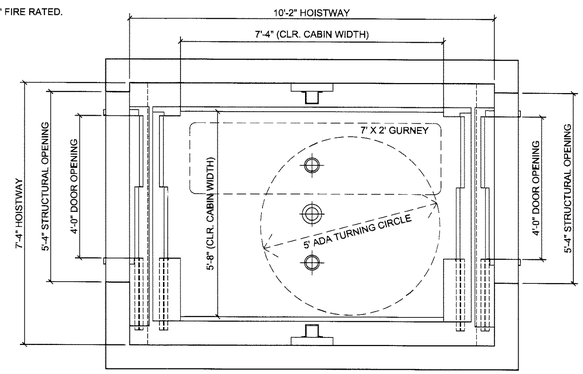

8 / A507 ELEVATOR PLAN DETAIL
1/2" = 1'-0"

NOTE:
THIS DIAGRAM IS INTENDED TO SHOW THE MINIMUM CODE REQUIREMENTS. REF. TO THE CONSTRUCTION DOCUMENTS FOR ADDITIONAL INFORMATION

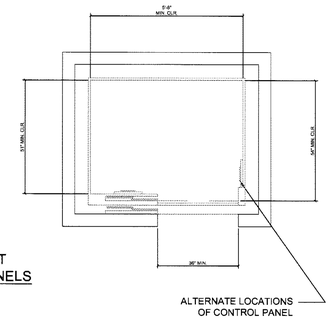

ELEVATOR CAR PLAN AT OFF-CENTER DOOR PANELS
CBC Fig. 30-A (a)

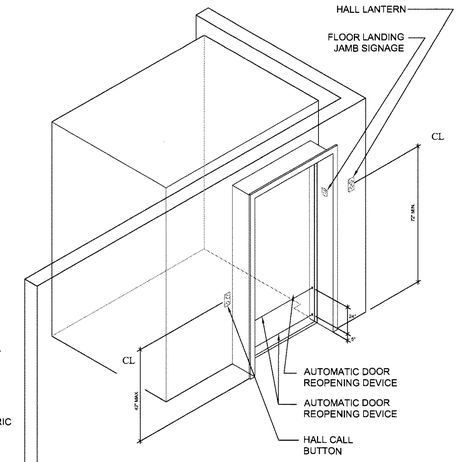

ELEVATOR AT FLOOR LANDING
CBC Fig. 30-C

NOTE:
THE AUTOMATIC DOOR REOPENING DEVICE IS ACTIVATED IF AN OBJECT PASSES THROUGH EITHER LINE A OR B. LINE A AND LINE B REPRESENT THE VERTICAL LOCATIONS OF THE DOOR REOPENING DEVICE NOT REQUIRING CONTACT.

NOTE:
FLOOR LANDING SIGNAGE IS REQUIRED ON JAMB PANELS ON BOTH SIDES OF ELEVATOR DOOR

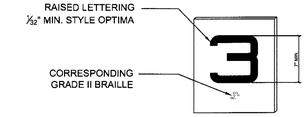

SIGNAGE AT FLOOR LANDING JAMB

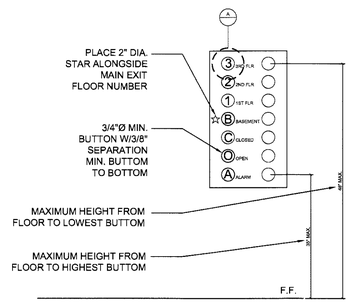

ELEVATOR CONTROL PANEL
CBC Fig. 30-B (a)

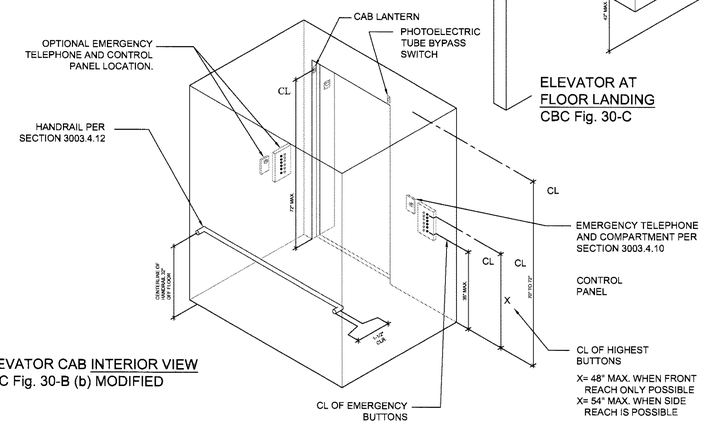

ELEVATOR CAB INTERIOR VIEW
CBC Fig. 30-B (b) MODIFIED

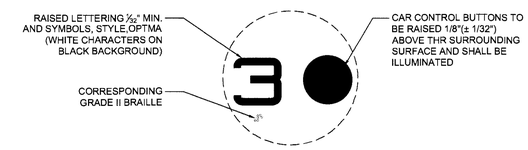

DETAIL "A"

NOTE:
FOR ADDITIONAL ELEVATOR REQUIREMENTS OR INFORMATION REFER TO UBC CHAPTER 30

NOTE:
LETTERS AND NUMERALS SHALL BE RAISED 1/32", UPPER CASE,BAND BERF TYPE AND SHALL BE ACCOMPANIED WITH GRADE II BRAILLE RAISED CHARACTERS SHALL BE AT LEAST 1/8" HIGH, BUT NO HIGHER THAN 2"

5 / A507 ADA ELEVATOR DETAIL
3/8" = 1'-0"

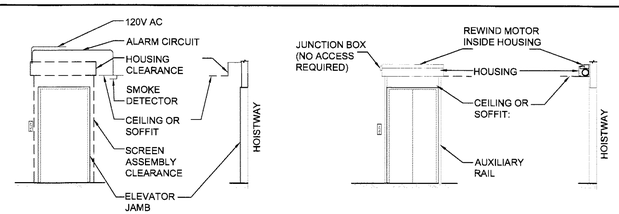

LANDING ELEVATION | SECTION | LANDING ELEVATION - READY STATE | SECTION - READY STATE

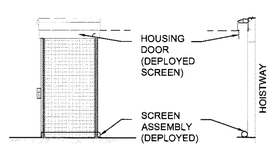

LANDING ELEVATION - DEPLOYED STATE | SECTION - DEPLOYED STATE

NOTES:
A. SMOKEGUARD M200 PER ESR-1136
B. ELEVATOR DOORS MUST BE SEPARATED FROM CORRIDORS OR THE REMAINDER OF THE BUILING WITH 1 HR FIRE RESISTIVE ASEMBLIES PER SEC. 707.7, 715.

9 / A507 SMOKEGUARD M200 ELEVATIONS
3/16" = 1'-0"

NOTE:
A. SMOKEGUARD M200 - PER ESR-1136

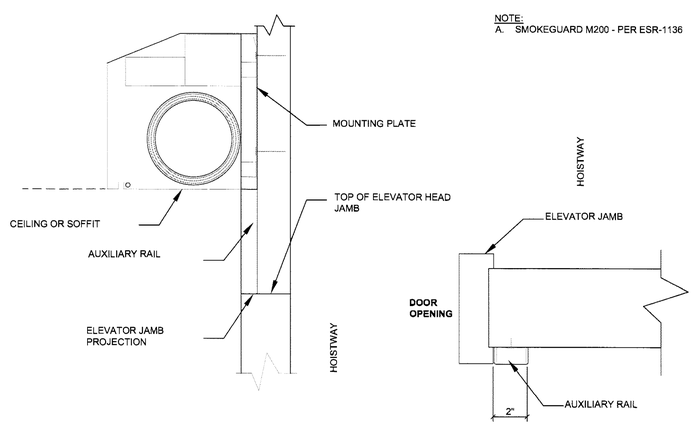

HEAD SECTION DETAIL | PLAN AT JAMB

6 / A507 SMOKEGUARD M200 SECTIONS
3/8" = 1'-0"

SHAFT OPENING

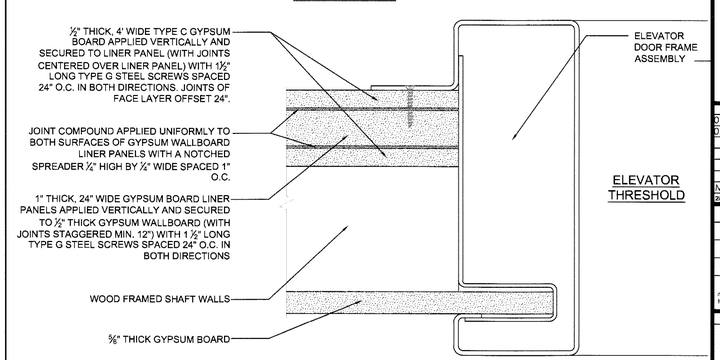

BLDG. INT. SPACE

FIELD COPY

3 / A507 FIRE RATED - ELEVATOR DOOR HEAD/JAMB
6" = 1'-0"

TECHNE
DESIGN | DEVELOPMENT
3956 30th Street, San Diego, CA 92104
techne-us.com sustainablearchitect.org
o 619-940-5814 m 313-595-5814

CONSULTANTS

LICENSED ARCHITECT
MICHAEL RENE MORTON
C-19371
REN. 04/30/2015
STATE OF CALIFORNIA

414 29th Avenue
Oakland, CA 94601

OWNER

29th Avenue Group, LLC
1211 Embarcadero Way, Suite D
Oakland, CA 94606

BuildZig
Dream it. Build it. Zig it.

APPROVED
CITY OF OAKLAND
BY: A. SEBASTIAN
2
ELECT MECH PLUMB
NOT CHECKED

MARK	DATE	DESCRIPTION
01	11.10.14	1st Building Permit Submittal
02	02.23.15	2nd Building Permit Submittal

2/22/2015 7:03:02 PM

PROJECT NO: 1410
CAD DWG FILE: ~~A508 DETAILS.DWG~~
DRAWN BY: A.S, M.M., J.C., J.S.
CHK'D BY: A.S., M.M

COPYRIGHT: TECHNE expressly reserves its common law copyright and other property rights in this document. This document shall not be reproduced, copied, changed or disclosed in any form or manner whatsoever without first obtaining the express written consent of TECHNE.

SHEET TITLE
DETAILS

A507
SHEET 40 OF 100

1. STRUCTURAL STEEL BEAM C12 X 20.7 @ TOP OF STAIR
2. LANDING TREAD W/ CONTRAST STRIPE - SEE DETAIL
3. PRECAST CONCRETE TREAD W/ 1" THICK RISER CONNECTED TO:
   a) (2) EMBEDDED GALVANIZED STEEL PLATES WELDED TO 1-1/2" GALVANIZED STEEL ANGLE OR
   b) (4) BOLTS ATTACHED TO THREADED HOLES AND TO GALVANIZED STEEL ANGLE
4. 1-1/2" GALVANIZED STEEL ANGLE SUPPORT WELDED TO TREAD SUPPORT
5. (2) C8 X 11.5 GALVANIZED "C" CHANNEL STRINGER WELDED TO STEEL FRAMING - PER STRUCTURAL
6. TREADS FASTENED TO 1-1/2" X 1-1/2" X 1/8" GALVANIZED STEEL ANGLE SUPPORT - PRIMED
7. 4 X 4 X 1/2" STEEL ANGLE ATTACHED W/ (4) BOLTS TO C12 X 20.7 "C" CHANNEL
8. 3 X 3 X 1/2" STEEL ANGLE ATTACHED W/ (2) BOLTS TO C12 X 20.7 "C" CHANNEL

NOTES:
A. SEE FLOOR PLAN OR ENLARGED PLAN FOR LAYOUT AND LOCATION
B. PRIME & PAINT W/ (2) COATS ALL EXPOSED STEEL (WHEN NO FIRE-RATING IS REQUIRED)
C. FOR FIRE RATED STAIRS, APPLY GRACE MONOKOTE MK-6/HY TO UNDERSIDE OF STAIRS IN THICKNESS SPECIFIED BY MANUFACTURER TO ACHIEVE DESIRED RATING.

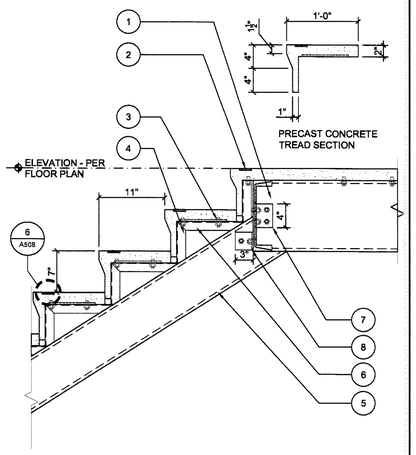

7 A508 STAIR @ TOP LANDING DETAIL 1" = 1'-0"

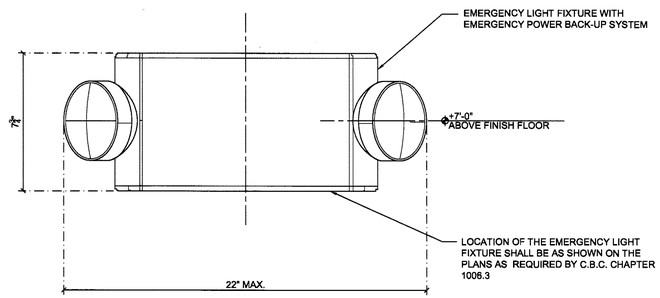

NOTES:
A. WIRE AND ATTACH LIGHT FIXTURE PER MANUFACTURERS INSTRUCTIONS
B. THE EMERGENCY LIGHT FIXTURE SHALL HAVE AN INTENSITY OF NOT LESS THAN 1 FOOT-CANDLE- PER CBC 1006.4.
C. ILLUMINATED AT ALL TIMES, AND HAVE NO LESS THAT 90 MINUTES EMERGENCY POWER SYSTEM - BATTERY BACK-UP
D. THE STAIRWILL ILUMINATED LEVEL SHALL NOT BE LESS THAN 1 FOOT-CANDLE AT THE WALKING SURFACE (SEPARATE LIGHT SYSTEM) - PER CBC 1006.2
E. FIXTURE SHOWN COOPER LIGHTING- CC8 SERIES

4 A508 EMERGENCY LIGHTING DETAIL 3" = 1'-0"

1 A508

1. GALVANIZED THREAD BOLTS ATTACHED INTO WALL SYSTEM - WALL FRAMING PER STRUCTURAL
2. 4 X 8 X 1/2" STEEL ANGLE ATTACHED W/ (6) BOLTS TO WALL STRUCTURE AND LANDING
3. (2) C8 X 11.5 GALVANIZED "C" CHANNEL STRINGERS WELDED TO STEEL FRAMING - PER STRUCTURAL
4. PRECAST CONCRETE TREAD CONNECTED TO
   a) (2) EMBEDDED GALVANIZED STEEL PLATES WELDED TO 1-1/2" GALVANIZED STEEL ANGLE OR
   b) (4) BOLTS ATTACHED TO THREADED HOLES AND TO GALVANIZED STEEL ANGLE
5. TREADS FASTENED TO 1-1/2" X 1-1/2" X 1/8" GALVANIZED STEEL ANGLE SUPPORT - PRIMED
6. 1" THICK - PRECAST CONCRETE RISER
7. 4 X 4 X 1/2" STEEL ANGLE ATTACHED W/ (4) BOLTS TO C12 X 20.7 "C" CHANNEL LANDING AND C8 X 11.5 "C" CHANNEL STRINGERS
8. 1-1/2" GALVANIZED STEEL ANGLE SUPPORT WELDED TO TREAD SUPPORT
9. MASONRY OR CMU WALL - PER FLOOR PLAN

NOTES:
A. SEE FLOOR PLAN OR ENLARGED PLAN FOR LAYOUT AND LOCATION
B. PRIME & PAINT W/ (2) COATS ALL EXPOSED STEEL (WHEN NO FIRE-RATING IS REQUIRED)
C. FOR FIRE RATED STAIRS, APPLY GRACE MONOKOTE MK-6/HY TO UNDERSIDE OF STAIRS IN THICKNESS SPECIFIED BY MANUFACTURER TO ACHIEVE DESIRED RATING.

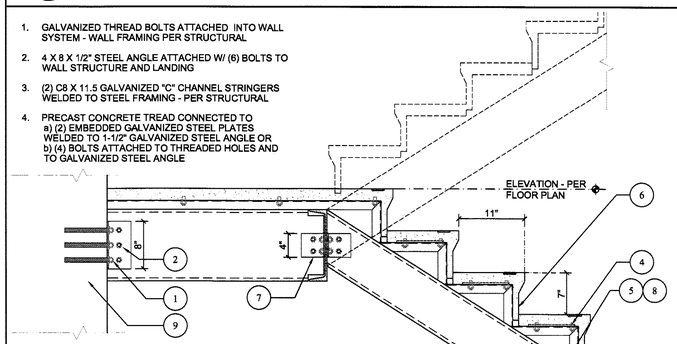

8 A508 STAIR @ INTERMEDIATE LANDING DETAIL 1" = 1'-0"

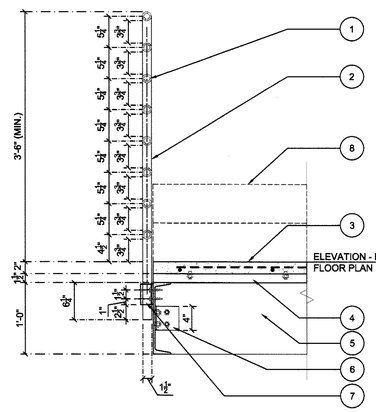

1. (8) 1-½" Ø GALVANIZED STEEL TUBE HORIZONTAL PICKETS/GUARDRAIL RAILING TYP. (SLOPED @ STAIRS)
2. 1-½" DIAMETER POST @ 4'-0" O.C. (U.N.O.)
3. 2" THICK PRE-CAST CONCRETE LANDING/STAIR TREAD
4. TREADS FASTENED TO 1-1/2" X 1-1/2" X 1/8" GALVANIZED STEEL ANGLE SUPPORT - PRIMED
5. STRUCTURAL STEEL BEAM C12 X 20.7 GALVANIZED "C" CHANNEL - PER STRUCTURAL
6. 4 X 4 X 1/2" STEEL ANGLE ATTACHED W/ (4) BOLTS TO C12 X 20.7 "C" CHANNEL LANDING
7. STANDARD STEEL POST BRACKET FASTENED TO STRUCTURAL BEAM - "C" STEEL CHANNEL W/ (4) BOLTS
8. OUTLINE OF STAIR TREADS AS OCCURS

NOTES:
A. REFER TO FLOOR PLAN FOR LAYOUT AND CONFIGURATION
B. GUARDRAIL - GRIND SMOOTH ALL WELDS
C. PRIME & PAINT ALL EXPOSED METAL

5 A508 GUARDRAIL @ STAIRS 1" = 1'-0"

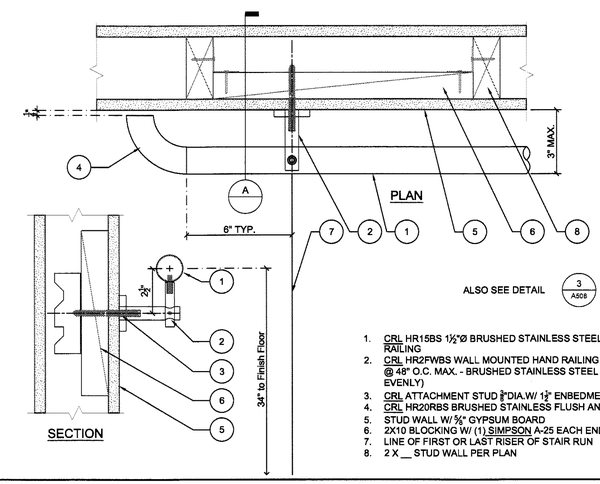

1. CRL HR15BS 1½"Ø BRUSHED STAINLESS STEEL TUBE RAILING
2. CRL HR2FWBS WALL MOUNTED HAND RAILING BRACKET @ 48" O.C. MAX. - BRUSHED STAINLESS STEEL (SPACE EVENLY)
3. CRL ATTACHMENT STUD ¾"DIA.W/ 1¾" ENBEDMENT
4. CRL HR20RBS BRUSHED STAINLESS FLUSH ANGLE END
5. STUD WALL W/ ⅝" GYPSUM BOARD
6. 2X10 BLOCKING W/ (1) SIMPSON A-25 EACH END
7. LINE OF FIRST OR LAST RISER OF STAIR RUN
8. 2 X __ STUD WALL PER PLAN

2 A508 HANDRAIL TO WOOD WALL DETAIL 3" = 1'-0"

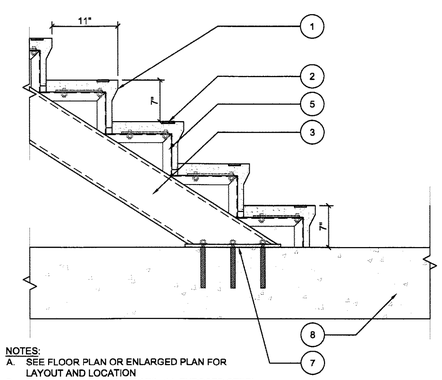

1. PRECAST CONCRETE TREAD W/ 1" THICK RISER CONNECTED TO:
   a) (2) EMBEDDED GALVANIZED STEEL PLATES WELDED TO 1-1/2" GALVANIZED STEEL ANGLE OR
   b) (4) BOLTS ATTACHED TO THREADED HOLES AND TO GALVANIZED STEEL ANGLE
2. LANDING TREAD W/ CONTRAST STRIPE - SEE DETAIL
3. (2) C8 X 11.5 GALVANIZED "C" CHANNEL STRINGERS WELDED TO STEEL FRAMING - PER STRUCTURAL
4. NOT USED
5. TREADS FASTENED TO 1-1/2" X 1-1/2" X 1/8" GALVANIZED STEEL ANGLE SUPPORT - PRIMED
6. NOT USED
7. 1/2" THICK GALVANIZED STEEL PLATE BOLTED (6) TO STRINGER AND EMBEDDED TO CONCRETE SLAB W/ EPOXY
8. CONCRETE SLAB - PER STRUCTURAL PLAN

ALSO SEE 7 A508 8 A508

NOTES:
A. SEE FLOOR PLAN OR ENLARGED PLAN FOR LAYOUT AND LOCATION
B. PRIME & PAINT W/ (2) COATS ALL EXPOSED STEEL (WHEN NO FIRE-RATING IS REQUIRED)
C. FOR FIRE RATED STAIRS, APPLY GRACE MONOKOTE MK-6/HY TO UNDERSIDE OF STAIRS IN THICKNESS SPECIFIED BY MANUFACTURER TO ACHIEVE DESIRED RATING.

9 A508 STAIR @ FLOOR SLAB DETAIL 1" = 1'-0"

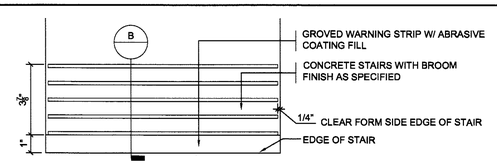

A STAIR TREADS - PLAN VIEW (N.T.S.)

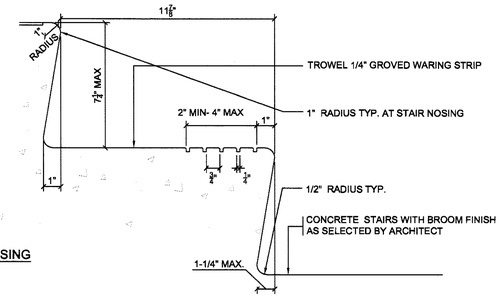

B SECTION AT NOSING

6 A508 CONCRETE TREAD NOSING DETAIL 3" = 1'-0"

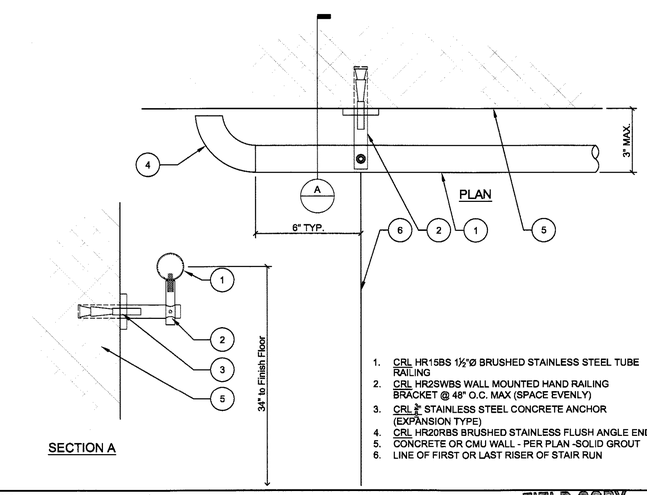

1. CRL HR15BS 1½"Ø BRUSHED STAINLESS STEEL TUBE RAILING
2. CRL HR2SWBS WALL MOUNTED HAND RAILING BRACKET @ 48" O.C. MAX (SPACE EVENLY)
3. CRL ¾" STAINLESS STEEL CONCRETE ANCHOR (EXPANSION TYPE)
4. CRL HR20RBS BRUSHED STAINLESS FLUSH ANGLE END
5. CONCRETE OR CMU WALL - PER PLAN -SOLID GROUT
6. LINE OF FIRST OR LAST RISER OF STAIR RUN

3 A508 HANDRAIL CONC./MASONRY WALL 3" = 1'-0"

FIELD COPY

TECHNE
DESIGN | DEVELOPMENT
3956 30th Street, San Diego, CA 92104
techne-us.com sustainablearchitect.org
o 619-940-5814 m 313-595-5814

CONSULTANTS

LICENSED ARCHITECT MICHAEL ANE MORTON C-19371 REN. 04/30/2015 STATE OF CALIFORNIA

414 29th Avenue
Oakland, CA 94601

OWNER

29th Avenue Group, LLC
1211 Embarcadero Way, Suite D
Oakland, CA 94606

BuildZig
Dream it. Build it. Zig it.

APPROVED CITY OF OAKLAND BUILDING SERVICES

ELECT. MECH. PL. NOT CHECKED

MARK	DATE	DESCRIPTION
01	07.17.14	30% - Design Development Submittal
02	08.04.14	Revised Elevator
03	08.15.14	Client Plan Revision
04	08.28.14	90% - Design Development Submittal
05	09.11.14	Client Plan Revision
06	11.10.14	1st Building Permit Submittal

4/30/2015 10:11:00 AM

PROJECT NO: 1410
CAD DWG FILE: ~~A508 DETAILS.DWG~~
DRAWN BY: A.S, M.M., J.C., J.S.
CHK'D BY: A.S., M.M

COPYRIGHT: TECHNE expressly reserves its common law copyright and other property rights in this document. This document shall not be reproduced, copied, changed or disclosed in any form or manner whatsoever without first obtaining the express written consent of TECHNE.

SHEET TITLE
DETAILS

A508

ONE HOUR RATED LOAD-BEARING EXTERIOR WALL PER UL DESIGN No. U356

REFER TO TESTING REPORT FOR ADDITIONAL INFORMATION

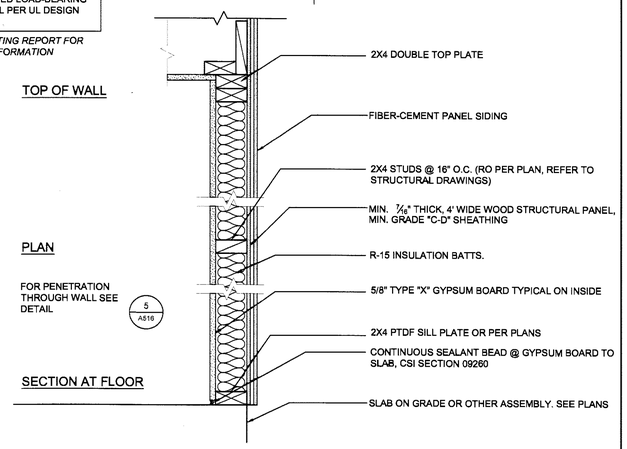

7 A509 TYPICAL 1 HR. RATED EXTERIOR CEMENT BOARD WALL
1 1/2" = 1'-0"

STC 66 & IIC 54 RATING PER RAL-0T03-09/10

1 HOUR FIRE RATING PER UL DESIGN L570

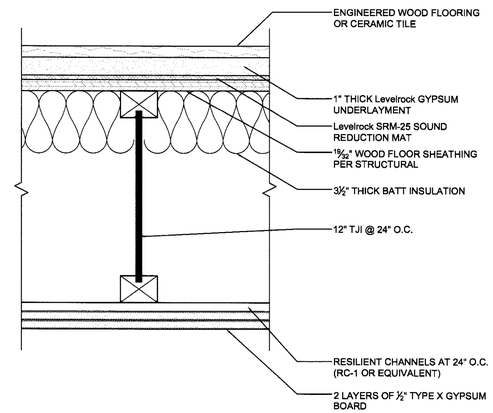

4 A509 1 HOUR RATED STC/IIC 50 FLOOR ASSEMBLY
3" = 1'-0"

NOTE:
THIS DETAIL APPLIES TO 45 MIN., 1 HOUR AND 1½" HOUR RATED DOORS

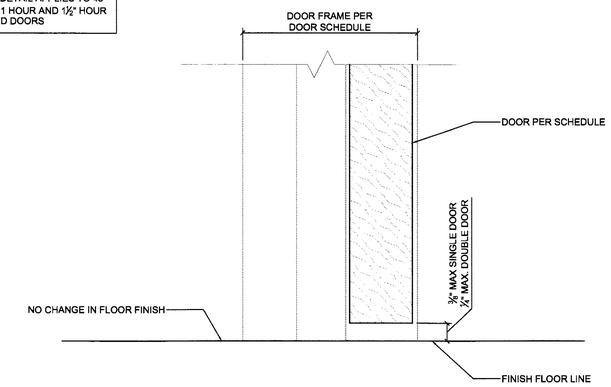

1 A509 FIRE RATED DOOR THRESHOLD DETAIL
6" = 1'-0"

A. Fire blocking and Draft Stops - CBC Section 717
1. In combustible construction, firestops and draft stopping shall be installed to cut off all concealed draft openings (both vertical and horizontal) and shall form an effective barrier between floors, between a top story and a roof or attic space, and shall subdivide attic spaces, concealed roof spaces, and floor/ceiling assemblies.
2. The integrity of all fire blocks and draft stops shall be maintained.
3. Required fire blocking locations:
   a. In concealed spaces of stud walls and partitions, including furred spaces at the ceiling and floor levels, and at 10 foot intervals in both vertical and horizontal dimensions.
   b. At all interconnections between concealed vertical and horizontal spaces such as occur at floors, drop ceilings and covered ceilings.
   c. In concealed spaces under stairs within stair structural stringer assemblies.
   d. In openings around vents, pipes, ducts, chimney, fireplaces and similar openings which would afford a passage of fire at ceiling and floor levels with non-combustible fire stopping material.
   e. At openings between attic spaces and chimney chases for factory-built fireplace chimneys.
   f. Where wood sleepers are laid under wood flooring over concrete floors, the space between the floor slab and underside of wood shall be filled with non-combustible material or fire blocking.
4. Fire blocking shall be installed so that there will be no open spaces under the flooring which will exceed 100 square feet.
5. Install fire blocking under all permanent partitions so that there shall be no unblocked spaces between adjoining rooms.

B. Fire Block Materials
   a. Fire blocking shall consist of 2-inch nominal lumber or two thickness of 1-inch nominal lumber with broken lap joints or one thickness of 0.719-inch structural panel with joints backed by 0.719 inch wood structural panel or one thickness of 0.75-inch (¾) partical board with joints backed by 0.75-inch particle board (or plywood).
   b. Gypsum board, cement fiber board, batts or blankets of mineral wool, glass fiber, or other approved material installed in such a manner as to be securely retained in plans, shall be permitted as an acceptable fireblock.

C. Double Stud Walls
   a. Batts or blankets of mineral or glass fiber or other approved non-ridgid materials shall be slowed as firblocking in wall structure using parallel rows of studs or staggered studs.
   b. Connections between horizontal and vertical spaces. Fireblocking shall be provided at interconnections between concealed vertical stud wall or partition spaces and concealed horizontal spaces created by an assembly of floor joist or trusses, and between concealed vertical and horizontal spaces such as occur at soffits , drop ceilings, cove ceilings and similar locations.

D. Concealed Wall Spaces
   a. Fireblocking shall provided in concealed spaces of stud walls, and partitions, including furred spaces, and parallel rows of studs or staggered studs, as follows:
1. Vertically at the Ceiling and floor levels.
   2. Horizontally at intervals not exceeding 10 feet.

E. Draft stopping (location and criteria)
   a. When there is a usable space above and below the concealed space of a floor /ceiling assembly (i.e. attic, or soffit area) it shall not exceed 1,000 square feet and/or measures more that 60 feet in any direction. Such spaces shall be equally divided by a draft stop.
   b. Draft stop min. construction shall be 1/2 inch gypsum board, 3/8 inch plywood or other approved materials, with a 3/8 inch maximum gap between sheets.

8 A509 FIREBLOCK & DRAFTSTOP DETAIL
3" = 1'-0"

STC 66 & IIC 54 RATING PER TLA-04-033

1 HOUR FIRE RATING PER UL DESIGN U341

NOTE: SEE TESTING REPORTS FOR ADDITIONAL INFORMATION AND REQUIREMENTS

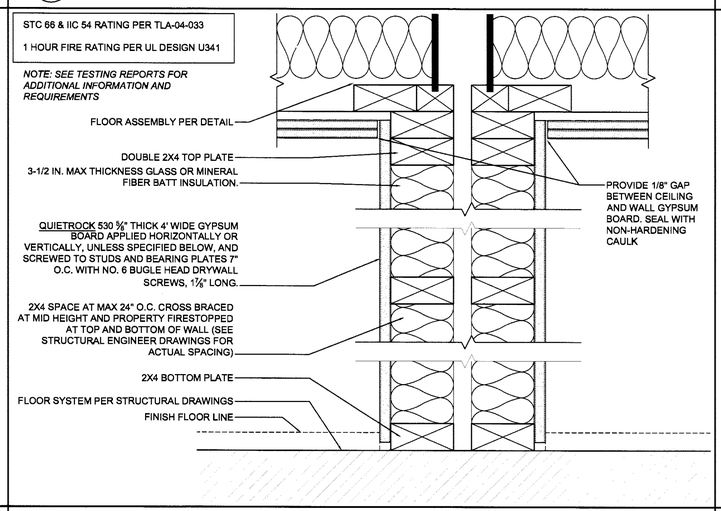

5 A509 1 HOUR RATED STC/IIC 50 PARTY WALL ASSEMBLY
3" = 1'-0"

NOTE:
1. ALL BOXES EXCEEDING 16 SQ IN. MUST BE PROTECTED USING PUTTY PADS
2. OPENING IN THE WALLBOARD FACING ARE TO BE CUT SO THAT THE CLEARANCE BETWEEN THE BOX AND WALLBOARD DOES NOT EXCEED 1/8".
3. IF THE AGGREGATE AREA OF BOXES EXCEEDS 100 SQ. IN. PER 100 SQ. FT. OF WALL, ALL THE BOXES MUST BE PROTECTED USING PUTTY PADS.
4. IF THE HORIZONTAL SPACING BETWEEN BOXES IS LESS THAN THE REQUIRED 24", THE BOXES MUST BE PROTECTED USING PUTTY PADS SUCH AS 3M "FIRE BARRIER" MOLDABLE PUTTY

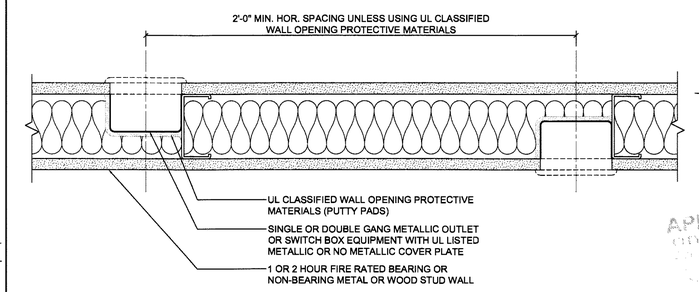

2 A509 FIRE RATED WALL ELECTRICAL BOX DETAIL
3" = 1'-0"

NOTES
1. CONTINUOUS FIRESTOP LOCATION
2. FLOOR LINE WITH CONTINUOUS FIRESTOP LOCATION

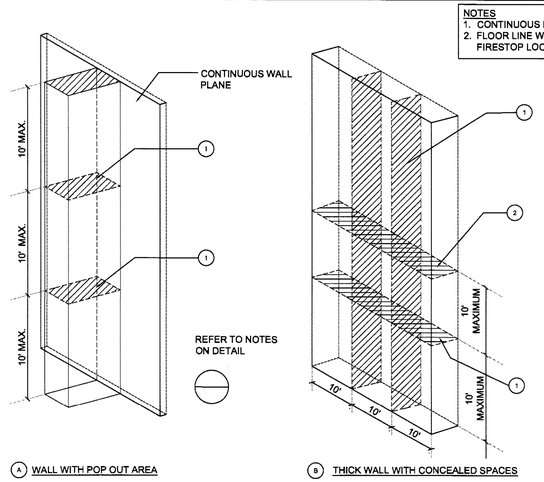

9 A509 FIRESTOP LOCATION DETAIL
1 1/2" = 1'-0"

ONE HOUR RATED EXTERIOR WALL PER CBC 2013, TABLE 721.1(2), ASSEMBLY 15-1.3

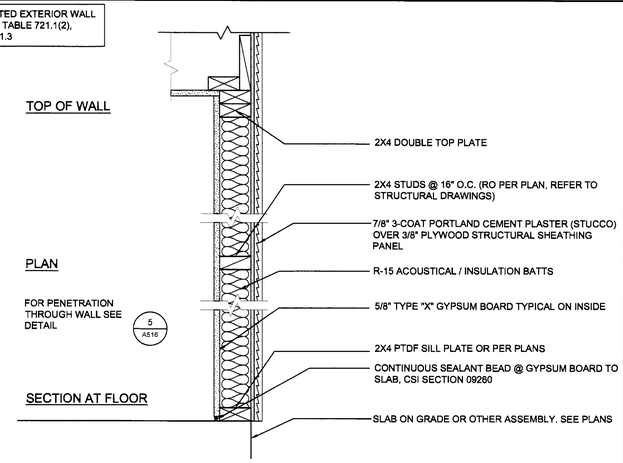

6 A509 TYPICAL 1 HR. RATED EXTERIOR STUCCO WALL
1 1/2" = 1'-0"

ONE HOUR RATED PARTITION PER UL305 STC RATING 30-39

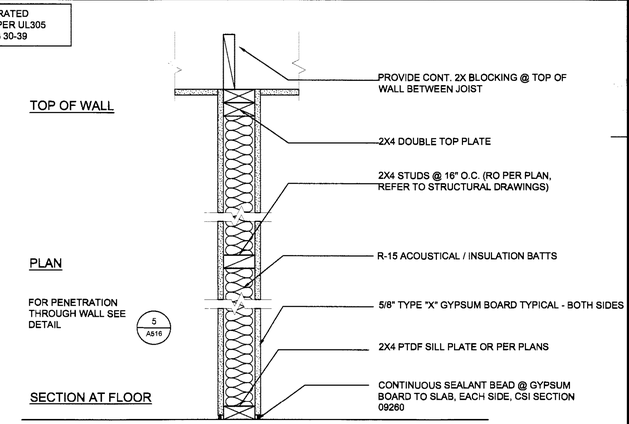

FIELD COPY

3 A509 TYPICAL 1 HR. RATED INTERIOR WALL
1 1/2" = 1'-0"

TECHNE
DESIGN | DEVELOPMENT
3956 30th Street, San Diego, CA 92104
techne-us.com sustainablearchitect.org
o 619-940-5814 m 313-595-5814

CONSULTANTS

LICENSED ARCHITECT MICHAEL RENE MORTON C-19371 REN. 04/30/2015 STATE OF CALIFORNIA

414 29th Avenue
Oakland, CA 94601

OWNER

29th Avenue Group, LLC
1211 Embarcadero Way, Suite D
Oakland, CA 94606

BuildZig
Dream it. Build it. Zig it.

APPROVED CITY OF OAKLAND BUILDING SERVICES
MECH PLUMB NOT CHECKED

MARK	DATE	DESCRIPTION
01	07.17.14	30% - Design Development Submittal
02	08.04.14	Revised Elevator
03	08.15.14	Client Plan Revision
04	08.28.14	90% - Design Development Submittal
05	09.11.14	Client Plan Revision
06	11.10.14	1st Building Permit Submittal

3/13/2015 11:02:04 AM

PROJECT NO: 1410
CAD DWG FILE: ~~A506 DETAILS.DWG~~
DRAWN BY: A.S, M.M., J.C., J.S.
CHK'D BY: A.S., M.M

COPYRIGHT: TECHNE expressly reserves its common law copyright and other property rights in this document. This document shall not be reproduced, copied, changed or disclosed in any form or manner whatsoever without first obtaining the express written consent of TECHNE

SHEET TITLE
DETAILS

A509

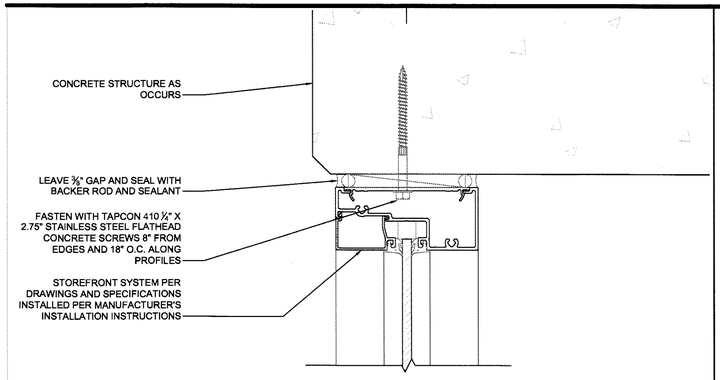

7 A510 STOREFRONT HEAD/JAMB DETAIL
6" = 1'-0"

NOTE: INSTALL DOOR UNIT PER MANUFACTURER'S INSTRUCTIONS

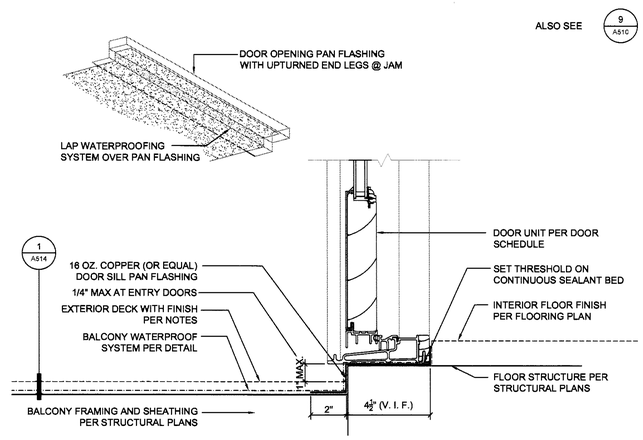

4 A510 EXTERIOR DOOR THRESHOLD DETAIL
3" = 1'-0"

NOTE:
INSTALL WINDOW UNIT PER MANUFACTURER'S INSTALLATION INSTRUCTIONS

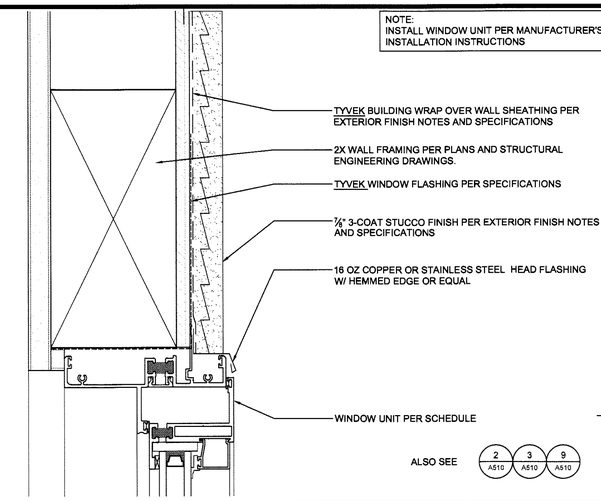

1 A510 WINDOW HEAD @ STUCCO WALL DETAIL
6" = 1'-0"

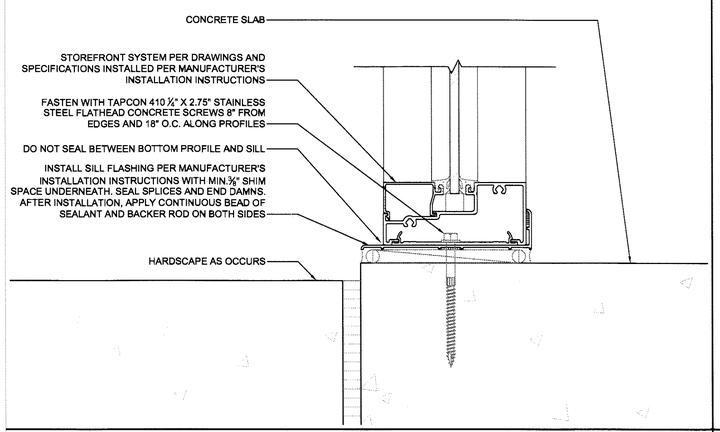

8 A510 STOREFRONT SILL DETAIL
6" = 1'-0"

NOTES:
1. INSTALL DOOR PER MANUFACTURER'S INSTALLATION INSTRUCTIONS
2. MASONRY / CONCRETE JAMB SHOWN
3. RIGHT HAND SHOWN, LEFT HAND OPPOSITE
4. OVERHEAD COMPANY MODEL 676 SHOWN

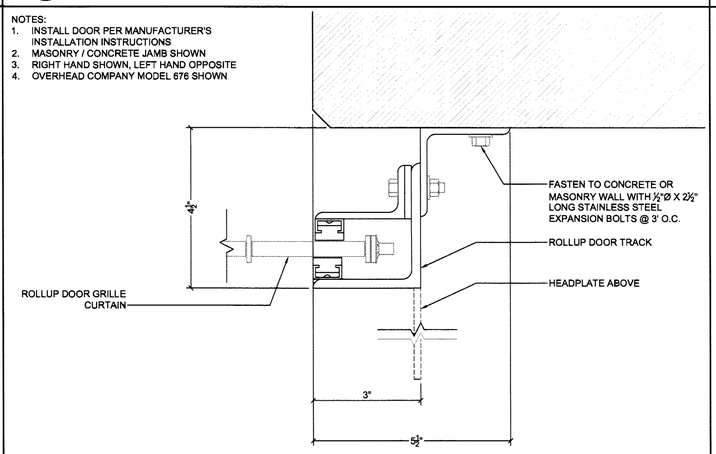

5 A510 ROLLUP DOOR JAMB DETAIL
6" = 1'-0"

NOTE:
INSTALL WINDOW UNIT PER MANUFACTURER'S INSTALLATION INSTRUCTIONS

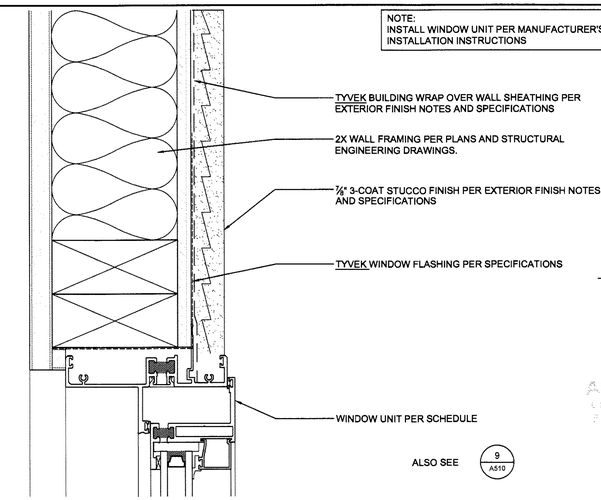

2 A510 WINDOW JAMB @ STUCCO WALL DETAIL
6" = 1'-0"

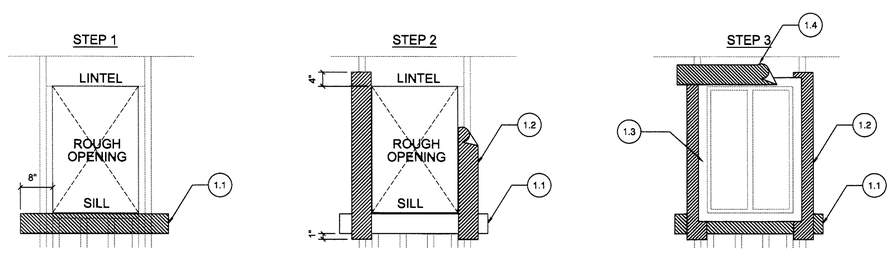

ATTACH SILL STRIP W/ TOP EDGE LEVEL W/ ROUGH SILL; EXTEND BEYOND EDGE OF ROUGH OPEN'G. AT LEAST 8". SECURE ALL SELF-ADHESIVE WATERPROOFING MEMBRANE (1) OR EQUAL APPROVED FLASHING. MATERIAL WITH GALV. NAILS OR POWER-DRIVEN STAPLES.

ATTACH JAMB STRIPS W/ SIDE EDGE EVEN W/ ROUGH JAMB FRAM'G. START STRIP 1" BELOW LOWER EDGE OF SILL STRIP & EXTEND 4" ABOVE LOWER EDGE OF LINTEL.

INSTALL WINDOW INTO ROUGH OPEN'G W/ SILL & JAMB FLANGES OVER PREVIOUSLY INSTALLED FLASH'G. ATTACH HEAD FLASH'G OVER THE WINDOW FLANGE.

COMMENCING AT THE BOTTOM OF THE WALL, LAY BLDG. PAPER UNDER SILL STRIP. CUT ANY EXCESS BLDG. PAPER EXTENDING ABOVE SILL FLANGE LINE ON EA. SIDE OF OPEN'G. (SHOWN AS SHORT DASH LINES) DO NO SLICE BLDG. PAPER HORIZ. SO THAT PAPER WILL LAP OVER JAMB STRIPS. INSTALL SUCCESSIVE LINES OF BLDG. PAPER (B,C,D, ETC.) OVER JAMB AND HEAD FLANGES, LAPPING EA. COURSE.

MATERIALS
1.WINDOW FLASHING MEMBRANE - FORTIFIDER FORTI-FLASH 40 MIL. SELF ADHESIVE WINDOW WATERPROOFING OR ARCHITECT APPROVED EQUAL
2.BUILDING WRAP -
LAYER A - (TYVEK) STUCCO WRAP - OR ARCHITECT APPROVED EQUAL - GRADE D WRAP INSTALLED PER MANUFACTURERS INSTALLATION INSTRUCTION
LAYER B - (1) LAYER SUPER JUMBO TEX 60 MINUTE GRADE D WRAP OR EQUAL

9 A510 WINDOW FLASHING INSTALLATION DETAIL (Door Similar)
3" = 1'-0"

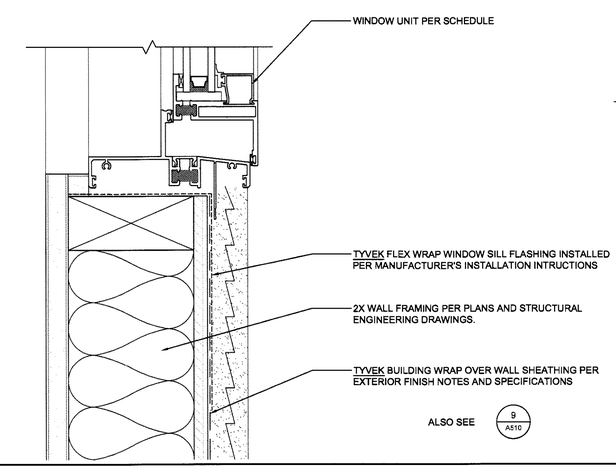

3 A510 WINDOW SILL @ CEMENT BOARD CLADDING DETAIL
6" = 1'-0"

FIELD COPY

TECHNE
DESIGN | DEVELOPMENT
3956 30th Street, San Diego, CA 92104
techne-us.com sustainablearchitect.org
o 619-940-5814 m 313-595-5814

CONSULTANTS

LICENSED ARCHITECT
MICHAEL RENE MORTON
C-19371
REN. 04/30/2015
STATE OF CALIFORNIA

414 29th Avenue
Oakland, CA 94601

OWNER

29th Avenue Group, LLC
1211 Embarcadero Way, Suite D
Oakland, CA 94606

BuildZig
Dream it. Build it. Zig it.

APPROVED
CITY OF OAKLAND
BUILDING SERVICES
MECH. PLUMB.
NOT CHECKED

MARK	DATE	DESCRIPTION
D1	11.10.14	1st Building Permit Submittal
D2	02.23.15	2nd Building Permit Submittal

2/22/2015 7:03:02 PM

PROJECT NO: 1410
CAD DWG FILE: ~~A510 DETAILS.DWG~~
DRAWN BY: A.S, M.M., J.C., J.S.
CHK'D BY: A.S., M.M

COPYRIGHT: TECHNE expressly reserves its common law copyright and other property rights in this document. This document shall not be reproduced, copied, changed or disclosed in any form or manner whatsoever without first obtaining the express written consent of TECHNE.

SHEET TITLE
DETAILS

A510

1. 11⅞" TJI ROOF FRAMING PER STRUCTURAL
2. 2 X 14 RIM JOIST
3. ⅜" PLYWOOD ROOF SHEATHING
4. ½" SLOPED PLYWOOD ROOF SHEATHING OVER RIPPED STRIPS @ ⅛" : 12" SLOPE
5. ½" DENSDECK ROOF SHEATHING
6. TPO ROOF MEMBRANE - PER ROOF NOTES
7. ⅜" PLYWOOD NAILING SHEATHING
8. ¾" X ¾" CONTINUOUS VINYL REVEAL - AMICO #AMSR500-750 - PRIME & PAINT
9. CARLISLE SECURE EDGE 200 DRIP EDGE - PER ROOF NOTES
10. (1) LAYER TYVEK BUILDING WRAP OVER (1) LAYER OF GRADE "D" BUILDING WRAP
11. ⅞" EXTERIOR PLASTER (STUCCO) W/ REINFORCING - PER EXTERIOR FINISH NOTES
12. 2 X 4 WALL FRAMING @ 16" O.C.
13. ⅝" GYPSUM BOARD W/ TEXTURE FINISH - PER INTERIOR FINISH NOTES
14. 20 GAUGE GALVANIZED METAL FASCIA BREAK METAL
15. ROOF INSULATION PER T-24 AND SECTION NOTES

NOTE:
A. INSTALL ROOFING AND DRIP EDGE PER MANUFACTURE'S INSTALLATION INSTRUCTIONS

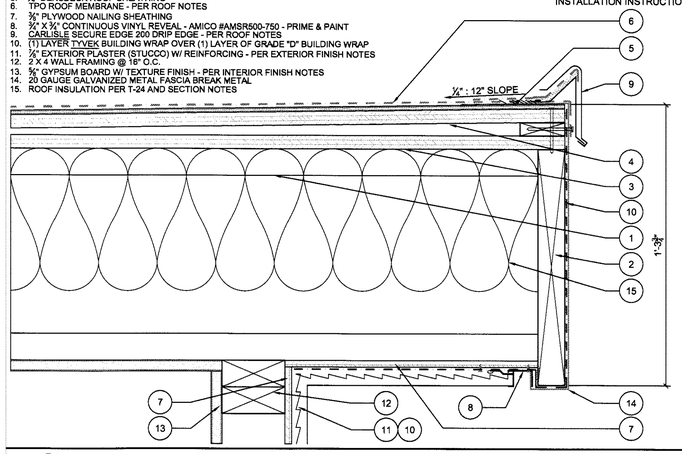

7 A511 FLAT ROOF EAVE DETAIL
3" = 1'-0"

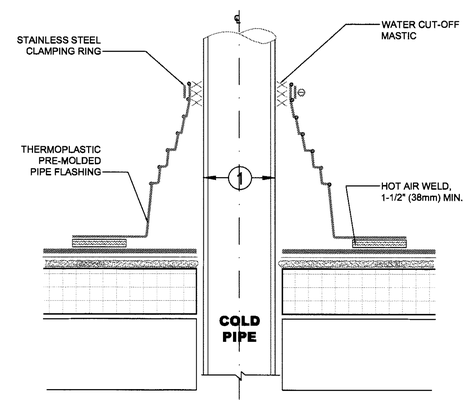

NOTES:
A. REMOVE ALL LEAD AND OTHER FLASHING BEFORE INSTALLING FIELD FABRICATED PIPE SEAL.
B. TEMPERATURE OF THE PIPE PENETRATION MUST NOT EXCEED 140°F (60°C) WHEN USING PVC AND 160°F (71°C) WHEN USING TPO FLASHING.
C. PIPE SEAL MUST HAVE INTACT RIB AT TOP EDGE, REGARDLESS OF PIPE DIAMETER.
D. DECK FLANGES OF THE PRE-MOLDED PIPE SEAL SHALL NOT BE OVERLAPPED, CUT OR APPLIED OVER ANY ANGLE CHANGE.
E. ROOFING SHALL BE INSTALLED PER MANUFACTURER'S INSTALLATION INSTRUCTIONS

DIMENSIONS		mm	
1	3/4"	8	TO
	8"	203	

4 A511 PIPE VENT PENETRATION - TPO
6" = 1'-0"

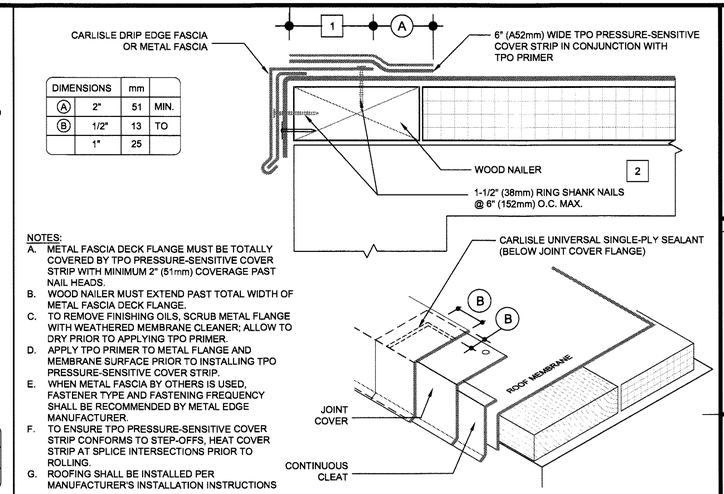

DIMENSIONS		mm	
A	2"	51	MIN.
B	1/2"	13	TO
	1"	25	

NOTES:
A. METAL FASCIA DECK FLANGE MUST BE TOTALLY COVERED BY TPO PRESSURE-SENSITIVE COVER STRIP WITH MINIMUM 2" (51mm) COVERAGE PAST NAIL HEADS.
B. WOOD NAILER MUST EXTEND PAST TOTAL WIDTH OF METAL FASCIA DECK FLANGE.
C. TO REMOVE FINISHING OILS, SCRUB METAL FLANGE WITH WEATHERED MEMBRANE CLEANER; ALLOW TO DRY PRIOR TO APPLYING TPO PRIMER.
D. APPLY TPO PRIMER TO METAL FLANGE AND MEMBRANE SURFACE PRIOR TO INSTALLING TPO PRESSURE-SENSITIVE COVER STRIP.
E. WHEN METAL FASCIA BY OTHERS IS USED, FASTENER TYPE AND FASTENING FREQUENCY SHALL BE RECOMMENDED BY METAL EDGE MANUFACTURER.
F. TO ENSURE TPO PRESSURE-SENSITIVE COVER STRIP CONFORMS TO STEP-OFFS, HEAT COVER STRIP AT SPLICE INTERSECTIONS PRIOR TO ROLLING.
G. ROOFING SHALL BE INSTALLED PER MANUFACTURER'S INSTALLATION INSTRUCTIONS

1 A511 DRIP EDGE FASCIA DETAIL
6" = 1'-0"

1. THUNDERBIRD TPO CLAD BOTTOM OUTLET COMBINATION ROOF DRAIN AND OVERFLOW DRAIN. SEE ROOF PLAN FOR SIZE AND LOCATION.
2. TPO ROOF MEMBRANE PER ROOF PLAN. (CLASS A)
3. 1½" MIN. HOT AIR WELD LAP OVER UNDERLAYMENT @ DRAIN FLANGE
4. ¼" DENS DECK© UNDERLAYMENT - CONTINUOUS @ ROOF
5. ½" SLOPED PLYWOOD - OR TAPERED POLYISO FOAM ROOF INSULATION - PER ROOF NOTES (DOUBLE DIAPHRAGM)
6. PLYWOOD SHEATHING - PER STRUCTURAL
7. TJI ROOF FRAMING PER STRUCTURAL DRAWINGS.
8. ROOF INSULATION PER NOTES (R-30 SHOWN)
9. ⅝" GYPSUM BOARD WITH TEXTURE AND FINISH - PER NOTES
10. (2) ABS. DRAIN LINES - (1) OVERFLOW BEYOND W/ (1) SEPARATE DRAIN LINE. SEE ROOF PLAN AND PLUMBING PLAN FOR SIZING.

NOTE:
- INSTALL ROOF AND DRAIN PER MANUFACTURER'S INSTALLATION INSTRUCTIONS
- REFER TO ROOF PLAN FOR ADDITIONAL INFORMATION

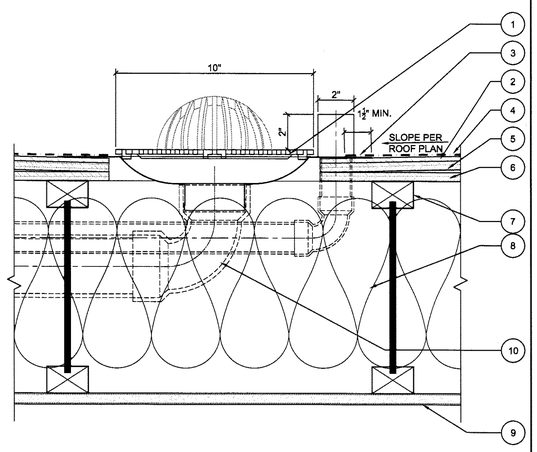

8 A511 ROOF DRAIN DETAIL
3" = 1'-0"

DIMENSIONS		mm	
1	2"	51	MIN.
2	3"	76	APPROX.

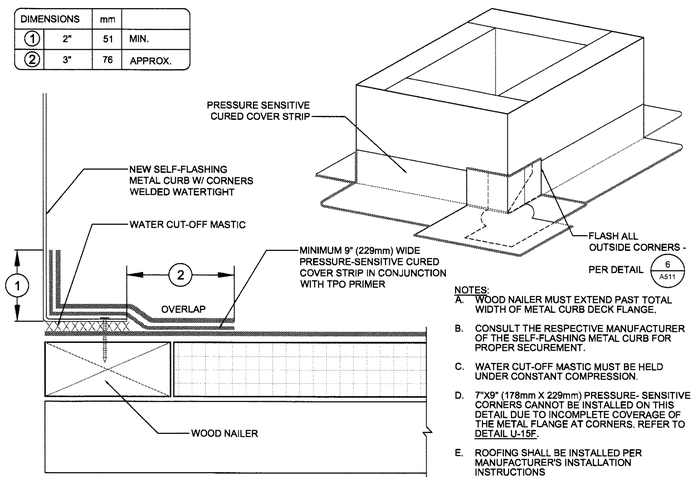

NOTES:
A. WOOD NAILER MUST EXTEND PAST TOTAL WIDTH OF METAL CURB DECK FLANGE.
B. CONSULT THE RESPECTIVE MANUFACTURER OF THE SELF-FLASHING METAL CURB FOR PROPER SECUREMENT.
C. WATER CUT-OFF MASTIC MUST BE HELD UNDER CONSTANT COMPRESSION.
D. 7"X9" (178mm X 229mm) PRESSURE- SENSITIVE CORNERS CANNOT BE INSTALLED ON THIS DETAIL DUE TO INCOMPLETE COVERAGE OF THE METAL FLANGE AT CORNERS. REFER TO DETAIL U-15F.
E. ROOFING SHALL BE INSTALLED PER MANUFACTURER'S INSTALLATION INSTRUCTIONS

5 A511 SELF-FLASHING METAL CURB DETAIL
6" = 1'-0"

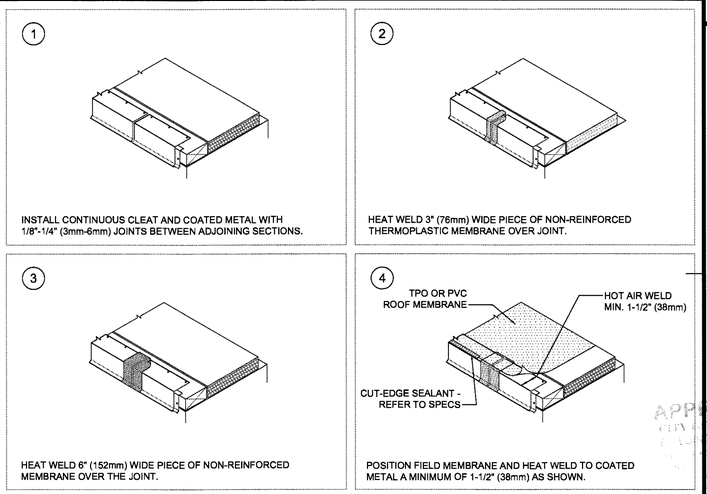

2 A511 EAVE / RAKE DETAIL
3" = 1'-0"

NOTE:
1. VERIFY MATERIAL AND FINISH WITH ROOFING NOTES

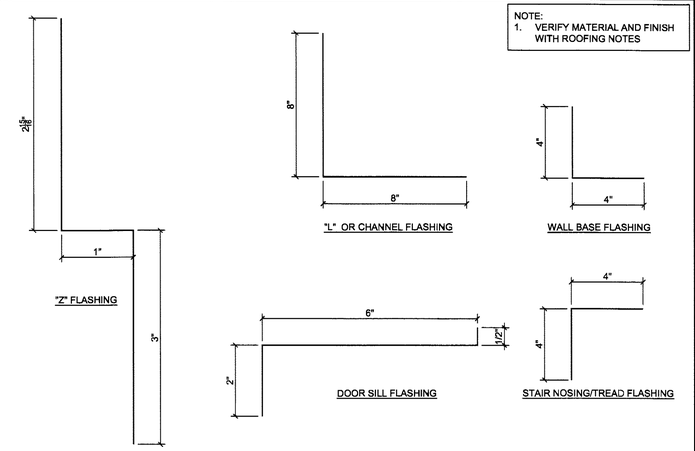

9 A511 FLASHING PROFILES
FULL SCALE

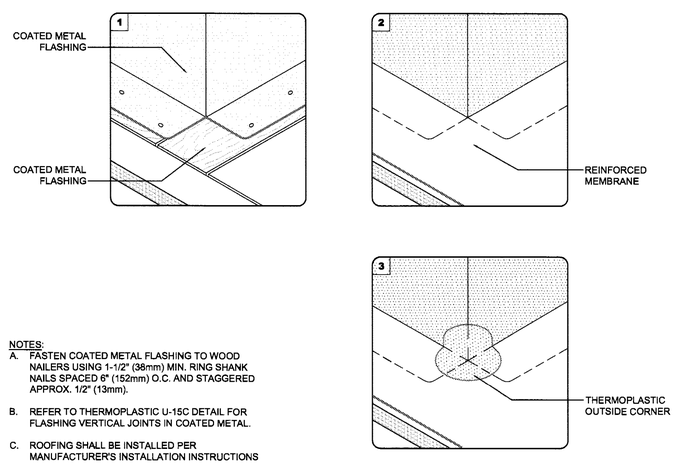

NOTES:
A. FASTEN COATED METAL FLASHING TO WOOD NAILERS USING 1-1/2" (38mm) MIN. RING SHANK NAILS SPACED 6" (152mm) O.C. AND STAGGERED APPROX. 1/2" (13mm).
B. REFER TO THERMOPLASTIC U-15C DETAIL FOR FLASHING VERTICAL JOINTS IN COATED METAL.
C. ROOFING SHALL BE INSTALLED PER MANUFACTURER'S INSTALLATION INSTRUCTIONS

6 A511 OUTSIDE CORNER FLASHING DETAIL
3" = 1'-0"

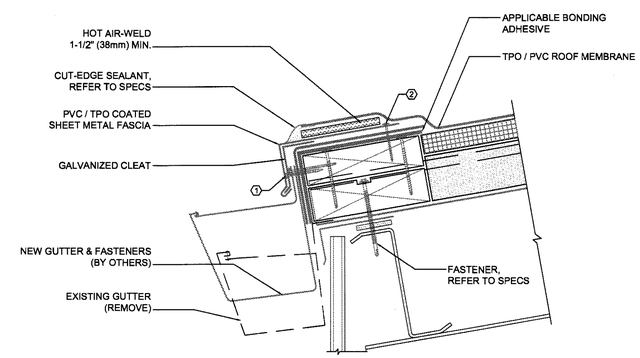

NOTE:
A. ROOFING SHALL BE INSTALLED PER MANUFACTURER'S INSTALLATION INSTRUCTIONS

1 1-1/2" (38mm) RING SHANK NAILS @ 6" (152mm) O.C. MAXIMUM

2 HP FASTENERS @ 12" (305mm) O.C. OR RING-SHANK NAILS @ 4" (102mm) O.C. & STAGGERED 3/4" (19mm) O.C.

3 A511 GUTTER WITH METAL FASCIA DETAIL
3" = 1'-0"

FIELD COPY

TECHNE
DESIGN | DEVELOPMENT
3956 30th Street, San Diego, CA 92104
techne-us.com sustainablearchitect.org
o 619-940-5814 m 313-595-5814

CONSULTANTS

LICENSED ARCHITECT
MICHAEL RENE MORTON
C-19371
REN. 04/30/2015
STATE OF CALIFORNIA

414 29th Avenue
Oakland, CA 94601

OWNER

29th Avenue Group, LLC
1211 Embarcadero Way, Suite D
Oakland, CA 94606

BuildZig
Dream it. Build it. Zig it.

APPROVED
CITY OF OAKLAND
PLANNING & ZONING DIVISION

MUCH PLUMB
NOT CHECKED

MARK	DATE	DESCRIPTION
01	11.10.14	1st Building Permit Submittal
02	02.23.15	2nd Building Permit Submittal

CAD2015 11:28:03 AM

PROJECT NO: 1410
CAD DWG FILE: ~~A511 DETAILS (ARCHIVE) SCHWEITZER'S CONFLICTED COPY 2014-10-20.DWG~~
DRAWN BY: A.S., M.M., J.C., J.S.
CHK'D BY: A.S., M.M

COPYRIGHT: TECHNE expressly reserves its common law copyright and other property rights in this document. This document shall not be reproduced, copied, changed or disclosed in any form or manner whatsoever without first obtaining the express written consent of TECHNE.

SHEET TITLE
DETAILS

A511

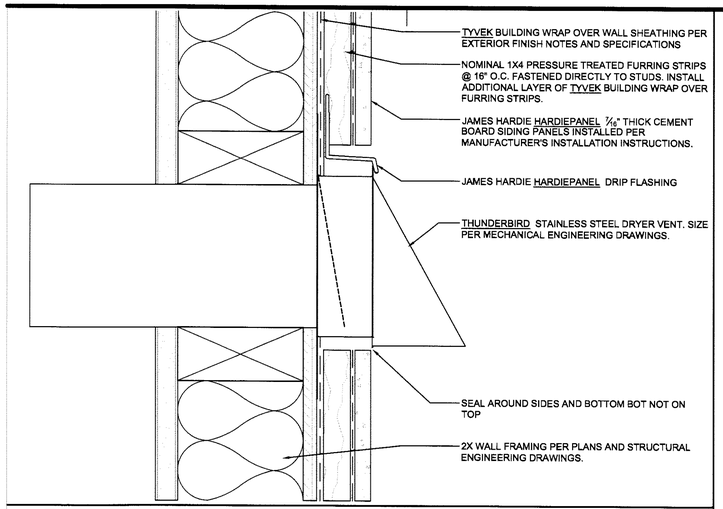

7 / A512 VENT AT CEMENT BOARD WALL
6" = 1'-0"

4 / A512

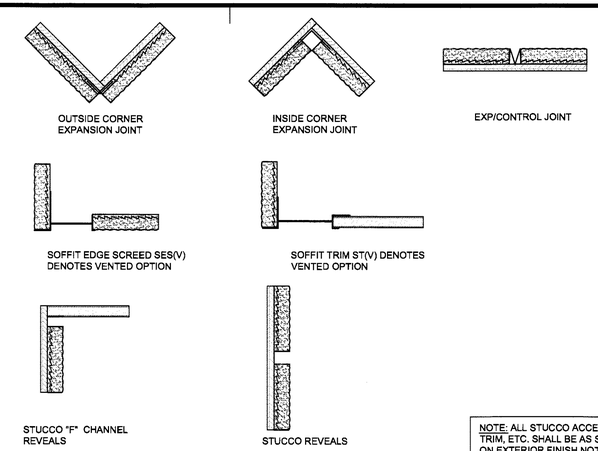

NOTE: ALL STUCCO ACCESSORIES, TRIM, ETC. SHALL BE AS SPECIFIED ON EXTERIOR FINISH NOTES, ROOF NOTES OR SPECIFICATIONS. VERIFY WITH ARCHITECT IF CLARIFICATION IS NEEDED.

1 / A512 STUCCO TRIM DETAILS
3" = 1'-0"

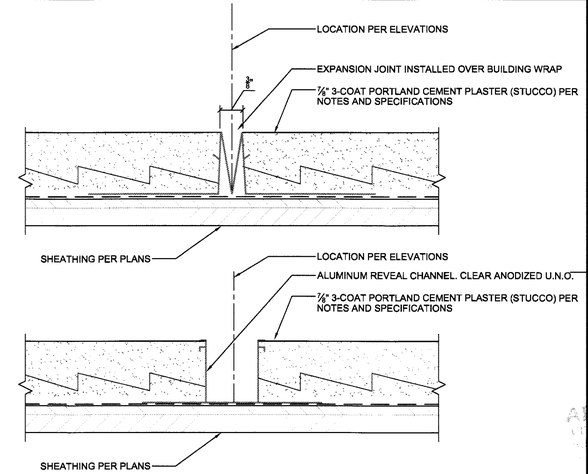

2 / A512 STUCCO EXPANSION/REVEAL JOINT DETAIL
FULL SIZE

8 / A512

5 / A512

9 / A512

6 / A512

3 / A512

FIELD COPY

TECHNE
DESIGN | DEVELOPMENT
3956 30th Street, San Diego, CA 92104
techne-us.com sustainablearchitect.org
o 619-940-5814 m 313-595-5814

CONSULTANTS

LICENSED ARCHITECT
MICHAEL RENE MORTON
C-19371
REN. 04/30/2015
STATE OF CALIFORNIA

414 29th Avenue
Oakland, CA 94601

OWNER

29th Avenue Group, LLC
1211 Embarcadero Way, Suite D
Oakland, CA 94606

BuildZig
Dream it. Build it. Zig it.

APPROVED
CITY OF OAKLAND
BUILDING SERVICES
PLANS ON FILE
NOT CHECKED

MARK	DATE	DESCRIPTION
01	07.17.14	30% - Design Development Submittal
02	08.04.14	Revised Elevator
03	08.15.14	Client Plan Revision
04	08.28.14	90% - Design Development Submittal
05	09.11.14	Client Plan Revision
06	11.10.14	1st Building Permit Submittal

3/3/2015 12:22:35 PM

PROJECT NO: 1410

CAD DWG FILE: ~~A511 DETAILS (ANNAY SCHNEITZER'S CONFLICTED COPY 2014-10-09).DWG~~

DRAWN BY: A.S, M.M., J.C., J.S.

CHK'D BY: A.S., M.M

COPYRIGHT: TECHNE expressly reserves its common law copyright and other property rights in this document. This document shall not be reproduced, copied, changed or disclosed in any form or manner whatsoever without first obtaining the express written consent of TECHNE.

SHEET TITLE

DETAILS

A512

SHEET 40 OF 100

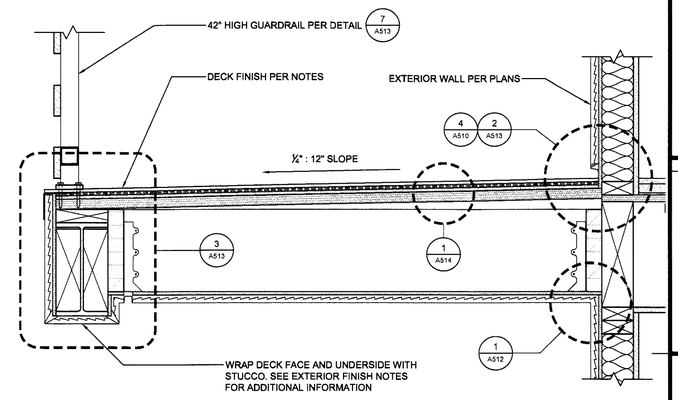

1 A513 WALKWAY SECTION
1 1/2" = 1'-0"

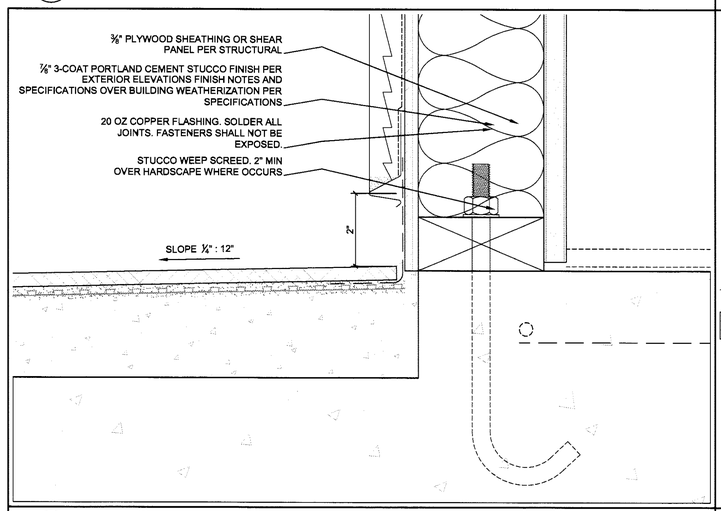

5 A513 CONCRETE/DECK BALCONY WATERPROOFING AT WALL
6" = 1'-0"

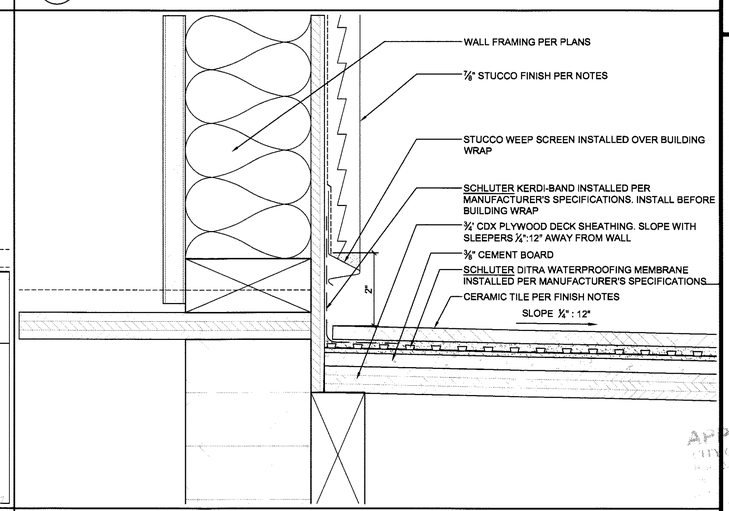

2 A513 BALCONY WATERPROOFING AT WALL
6" = 1'-0"

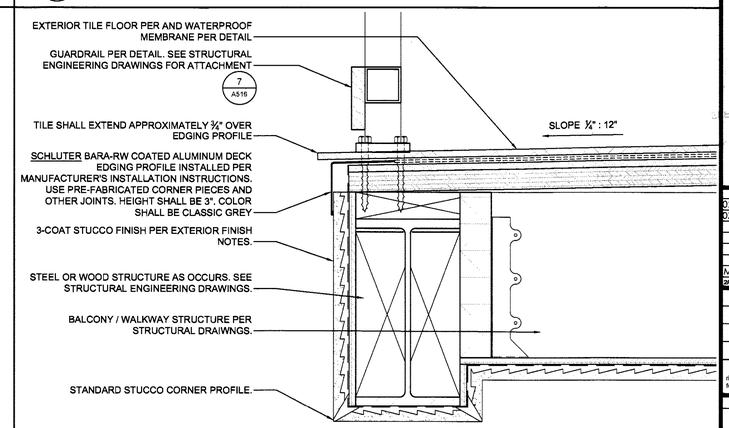

FIELD COPY

3 A513 DECK EDGE DETAIL
3" = 1'-0"

TECHNE
DESIGN | DEVELOPMENT
3956 30th Street, San Diego, CA 92104
techne-us.com sustainablearchitect.org
o 619-940-5814 m 313-595-5814

CONSULTANTS

LICENSED ARCHITECT
MICHAEL RENE MORTON
C-19371
REN. 04/30/2015
STATE OF CALIFORNIA

414 29th Avenue
Oakland, CA 94601

OWNER

29th Avenue Group, LLC
1211 Embarcadero Way, Suite D
Oakland, CA 94606

BuildZig
Dream it. Build it. Zig it.

APPROVED
CITY OF OAKLAND
BUILDING SERVICES
ELECT. MECH. PLUM.
NOT CHECKED

MARK	DATE	DESCRIPTION
01	11.10.14	1st Building Permit Submittal
02	02.23.15	2nd Building Permit Submittal

2/4/2015 11:28:03 AM

PROJECT NO: 1410
CAD DWG FILE: ~~A511 DETAILS (ARHAY SCHWEITZER'S CONFLICTED COPY 2014-10-09.DWG~~
DRAWN BY: A.S, M.M., J.C., J.S.
CHK'D BY: A.S., M.M

COPYRIGHT: TECHNE expressly reserves its common law copyright and other property rights in this document. This document shall not be reproduced, copied, changed or disclosed in any form or manner whatsoever without first obtaining the express written consent of TECHNE.

SHEET TITLE
DETAILS

A513

A. TILE INSTALLATION:. All tile installation shall be done in accordance with the tile manufacturer's installation instructions and in accordance with the Tile Council of North America (TCNA) Handbook for Ceramic, Glass, and Stone Tile Installation.
B. TILE CHARACTERISTICS: All Ceramic, Porcelain, or Natural Stone tile used on floors shall have a minimum Static Coefficient of Friction of 0.75 dry and 0.60 wet. Dynamic Coefficient of Friction shall be at least 0.42 for tile surfaces when wet.

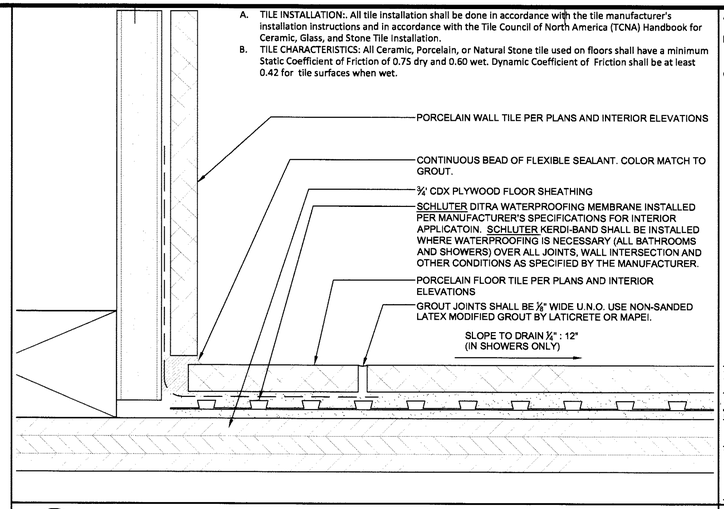

4 / A514 TILE FLOOR TO WALL TRANSITION DETAIL
FULL SIZE

A. TILE INSTALLATION:. All tile installation shall be done in accordance with the tile manufacturer's installation instructions and in accordance with the Tile Council of North America (TCNA) Handbook for Ceramic, Glass, and Stone Tile Installation.
B. TILE CHARACTERISTICS: All Ceramic, Porcelain, or Natural Stone tile used on floors shall have a minimum Static Coefficient of Friction of 0.75 dry and 0.60 wet. Dynamic Coefficient of Friction shall be at least 0.42 for tile surfaces when wet. TECHNE does not approve any material that does not meet these safety specifications.
C. TILE SUBSTRATE: Tile substrate shall meet the minimum manufacturer requirements for approved substrates and also meet the substrate requirements described in the TCNA Handbook for Ceramic, Glass, and Stone Tile Installation for the specific proposed assembly. For large format tiles, where at least one edge is equal to or exceeds 15", substrate shall have no more than a 1/8" variance in 10', with no more than 1/16" variation in 24". Substrate deflection shall be limited to L/360 as calculated by an engineer for installation of large format tiles. If deflection is more than L/360, TECHNE does not approve the installation of large format tiles.

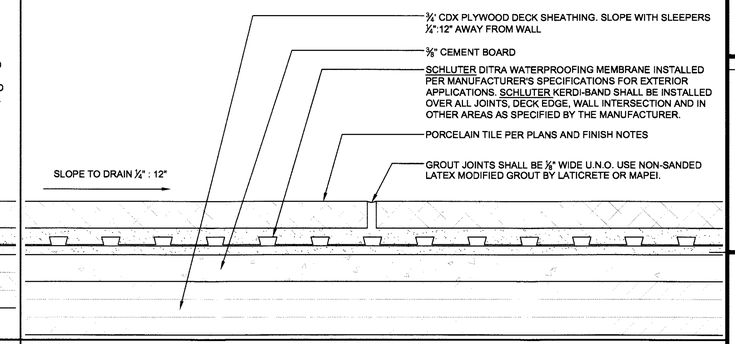

1 / A514 EXTERIOR TILE OVER WOOD DETAIL
FULL SIZE

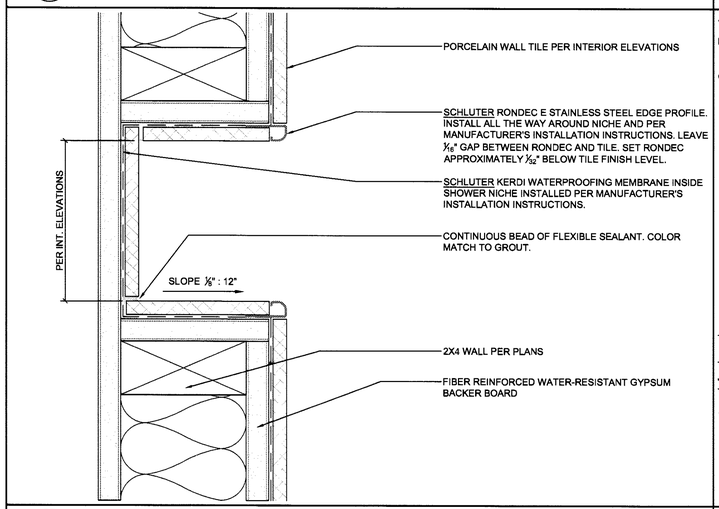

5 / A514 SHOWER NICHE DETAIL
6" = 1'-0"

A. TILE INSTALLATION:. All tile installation shall be done in accordance with the tile manufacturer's installation instructions and in accordance with the Tile Council of North America (TCNA) Handbook for Ceramic, Glass, and Stone Tile Installation.
B. TILE CHARACTERISTICS: All Ceramic, Porcelain, or Natural Stone tile used on floors shall have a minimum Static Coefficient of Friction of 0.75 dry and 0.60 wet. Dynamic Coefficient of Friction shall be at least 0.42 for tile surfaces when wet. TECHNE does not approve any material that does not meet these safety specifications.
C. TILE SUBSTRATE: Tile substrate shall meet the minimum manufacturer requirements for approved substrates and also meet the substrate requirements described in the TCNA Handbook for Ceramic, Glass, and Stone Tile Installation for method F128-12. For large format tiles, where at least one edge is equal to or exceeds 15", substrate shall have no more than a 1/16" variance in 10' from the required plane, with no more than 1/16" variation in 24" when measured from the high points in the surface. Substrate deflection shall be limited to L/360 as calculated by an engineer for installation of large format tiles. If deflection is more than L/360, TECHNE does not approve the installation of large format tiles.

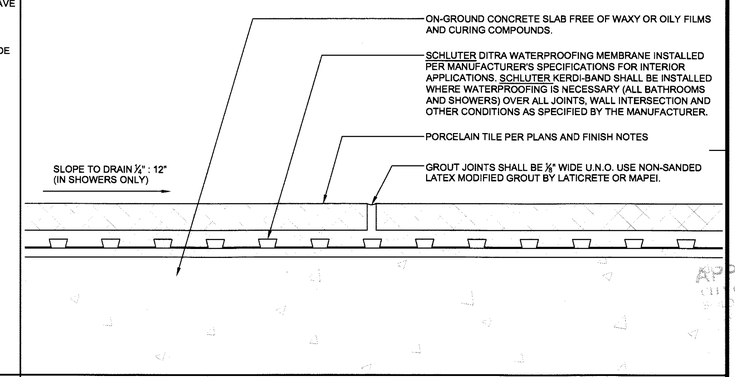

2 / A514 INTERIOR TILE OVER CONCRETE DETAIL
FULL SIZE

NOTES:
A. ALL TILE AND WOOD FLOORING SHALL BE INSTALLED PER DETAILS AND SPECIFICATIONS.
B. TILE AND WOOD SURFACES SHALL BE LEVEL WITH EACH OTHER AT TRANSITION.
C. SHOULD EITHER SURFACE NEED SUBSTANTIAL ADJUSTMENT IN HEIGHT, CONTACT TECHNE FOR INSTRUCTIONS.

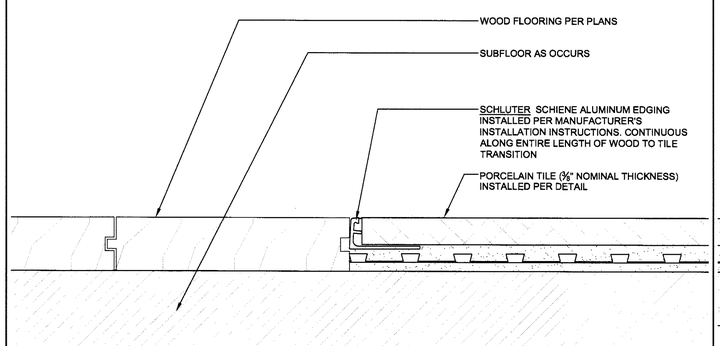

6 / A514 WOOD TO TILE TRANSITION
FULL SIZE

A. TILE INSTALLATION:. All tile installation shall be done in accordance with the tile manufacturer's installation instructions and in accordance with the Tile Council of North America (TCNA) Handbook for Ceramic, Glass, and Stone Tile Installation.
B. TILE CHARACTERISTICS: All Ceramic, Porcelain, or Natural Stone tile used on floors shall have a minimum Static Coefficient of Friction of 0.75 dry and 0.60 wet. Dynamic Coefficient of Friction shall be at least 0.42 for tile surfaces when wet. TECHNE does not approve any material that does not meet these safety specifications.
C. TILE SUBSTRATE: Tile substrate shall meet the minimum manufacturer requirements for approved substrates and also meet the substrate requirements described in the TCNA Handbook for Ceramic, Glass, and Stone Tile Installation for method F148-12 or F147-12. For large format tiles, where at least one edge is equal to or exceeds 15", substrate shall have no more than a 1/8" variance in 10', with no more than 1/16" variation in 24". Substrate deflection shall be limited to L/360 as calculated by an engineer for installation of large format tiles. If deflection is more than L/360, TECHNE does not approve the installation of large format tiles.

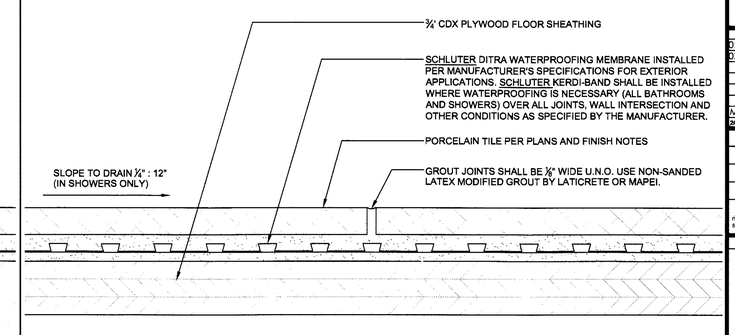

3 / A514 INTERIOR TILE OVER WOOD DETAIL
FULL SIZE

FIELD COPY

7 / A514
8 / A514
9 / A514

TECHNE
DESIGN | DEVELOPMENT
3956 30th Street, San Diego, CA 92104
techne-us.com sustainablearchitect.org
o 619-940-5814 m 313-595-5814

CONSULTANTS

LICENSED ARCHITECT
MICHAEL REZE MORTON
C-19371
REN. 04/30/2015
STATE OF CALIFORNIA

414 29th Avenue
Oakland, CA 94601

OWNER

29th Avenue Group, LLC
1211 Embarcadero Way, Suite D
Oakland, CA 94606

BuildZig
Dream it. Build it. Zig it.

APPROVED
CITY OF OAKLAND
BUILDING SERVICES

MARK	DATE	DESCRIPTION
01	11.10.14	1st Building Permit Submittal
02	02.23.15	2nd Building Permit Submittal

2/4/2015 11:28:03 AM

PROJECT NO: 1410
CAD DWG FILE: ~~A511 DETAILS (ABHAY SCHWEITZER'S CONFLICTED COPY 2014-11-20).DWG~~
DRAWN BY: A.S., M.M., J.C., J.S.
CHK'D BY: A.S., M.M

COPYRIGHT: TECHNE expressly reserves its common law copyright and other property rights in this document. This document shall not be reproduced, copied, changed or disclosed in any form or manner whatsoever without first obtaining the express written consent of TECHNE

SHEET TITLE
DETAILS

A514

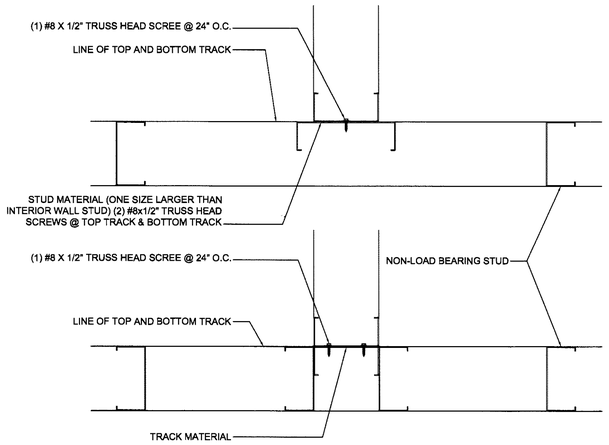

4 A515 NON-STRUCTURAL METAL STUD PARTITION WALL INTERSECTION DETAIL
3" = 1'-0"

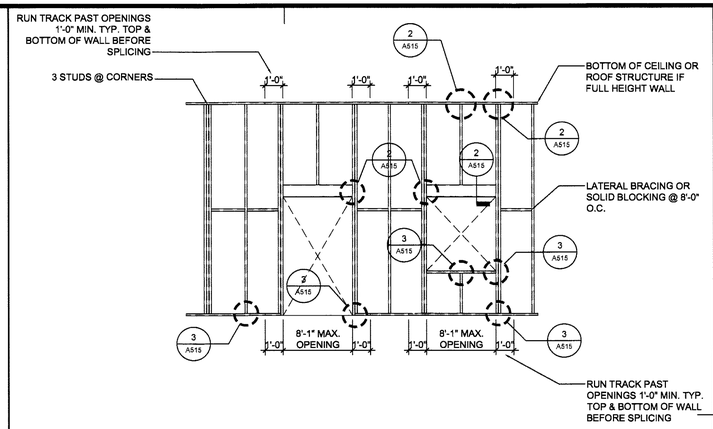

NOTE:
1. TRACK SAME GAUGE AS STUDS
2. MULTIPLE STUDS TO BE WELDED ⅛" X 1" LONG @ 2'-0" O.C. EACH FLANGE.
3. USE 20 GA. STUDS U.N.O.

1 A515 TYPICAL NON-STRUCTURAL METAL PARTITION FRAMING DETAIL
1/4" = 1'-0"

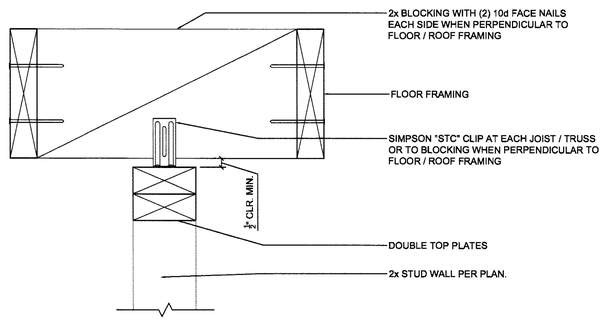

5 A515 PARTITION WALL DETAIL
3" = 1'-0"

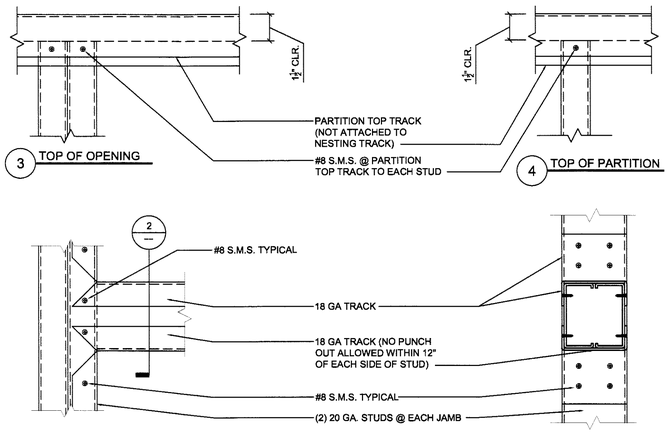

2 A515 TYPICAL NON-STRUCTURAL PARTITION WALL DETAIL
3" = 1'-0"

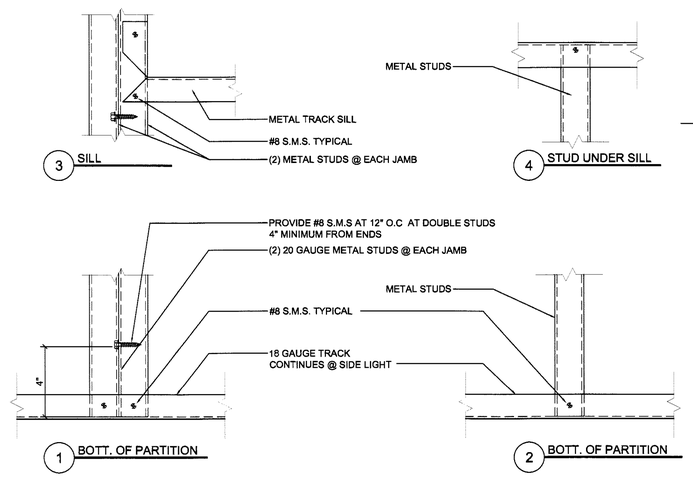

3 A515 TYPICAL NON-STRUCTURAL PARTITION WALL DETAIL - 02
3" = 1'-0"

FIELD COPY

7 A515

8 A515

9 A515

6 A515

TECHNE
DESIGN | DEVELOPMENT
3956 30th Street, San Diego, CA 92104
techne-us.com sustainablearchitect.org
o 619-940-5814 m 313-595-5814

CONSULTANTS

LICENSED ARCHITECT
MICHAEL REESE MORTON
C-19371
REN. 04/30/2015
STATE OF CALIFORNIA

414 29th Avenue
Oakland, CA 94601

OWNER

29th Avenue Group, LLC
1211 Embarcadero Way, Suite D
Oakland, CA 94606

BuildZig
Dream it. Build it. Zig it.

APPROVED
CITY OF OAKLAND
NOT CHECKED

MARK	DATE	DESCRIPTION
01	11.10.14	1st Building Permit Submittal
02	02.23.15	2nd Building Permit Submittal

04/20/15 11:28:03 AM

PROJECT NO: 1410
CAD DWG FILE: ~~A511 DETAILS (ABHAY SCHMEITZER'S CONFLICTED COPY 2014-10-20).DWG~~
DRAWN BY: A.S, M.M., J.C., J.S.
CHK'D BY: A.S., M.M

COPYRIGHT: TECHNE expressly reserves its common law copyright and other property rights in this document. This document shall not be reproduced, copied, changed or disclosed in any form or manner whatsoever without first obtaining the express written consent of TECHNE.

SHEET TITLE
DETAILS

A515

TROPICAL HARDWOOD GUARDRAIL

1. 2" X 2" X .125" GALVANIZED TUBE STEEL POST @ 4' O.C. PRIME AND PAINT.
2. 2" X 2" X .125" GALVANIZED TUBE STEEL TOP/BOTTOM RAIL PRIME AND PAINT.
3. 1 X 6 MACHICHE (.75" X 5.5") MEMBERS. INSTALL HORIZONTALLY WITH 1" GAP WITH (4) # 8 X 2" FHWS COATED (OR STAINLESS STEEL) DECK SCREWS (4) MIN. EACH BOARD. PRE-DRILL WITH COUNTERSINK BIT. INSTALL BOARD WITH ⅛" GAP AT BUTT SEAMS. FINISH WITH Performance Coatings Penofin® Hardwood Formula Wood Stain PER MANUFACTURERS APPLICATION INSTRUCTIONS.
4. 1 X 6 MACHICHE (.75" X 5.5") TOP CAP MEMBERS. INSTALL WITH (4) # 8 X 2" FHWS COATED (OR STAINLESS STEEL) DECK SCREWS (4) MIN. EACH BOARD. PRE-DRILL WITH COUNTERSINK BIT. INSTALL BOARD WITH ½" GAP AT BUTT SEAMS. FINISH WITH Performance Coatings Penofin® Hardwood Formula Wood Stain PER MANUFACTURERS APPLICATION INSTRUCTIONS.
5. ATTACHMENT PLATE PER STRUCTURAL ENGINEERING DRAWINGS. SET IN BED OF SEALANT.

NOTES:

- MINIMUM GUARD HEIGHT SHALL BE 42".
- OPENINGS SHALL NOT ALLOW PASSAGE OF A SPHERE 4" IN DIAMETER.

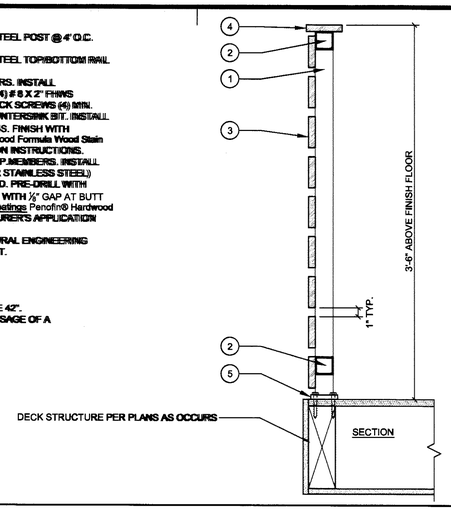

7 / A516 GUARDRAIL DETAIL
1 1/2" = 1'-0"

CEILING FRAMING - WITHOUT STORAGE		
FRAMING	SPAN (MAX.)	SPACING
2 X 4	1'-0" - 11'-0"	16" O.C.
2 X 6	11'-0" - 17'-6"	16" O.C.
2 X 8	17'-6" - 23'-0"	16" O.C.
2 X 10	23'-6" - 26'-0"	16" O.C.

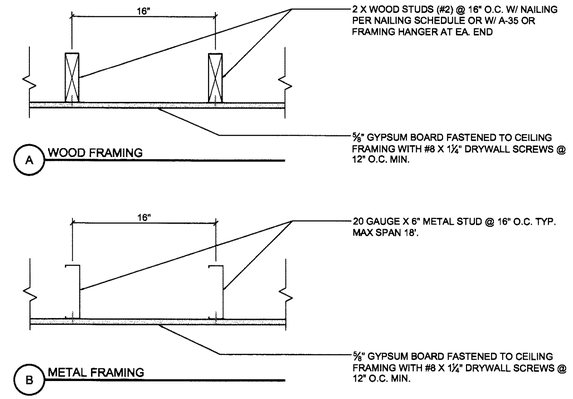

4 / A516 GYPSUM BOARD CEILING DETAIL
1 1/2" = 1'-0"

1. OPERABLE WINDOW OR DOOR OPENING
2. EXTERIOR FINISHED WALL - SEE EXTERIOR FINISH NOTES AND ELEVATIONS
3. EXHAUST OR VENT OPENING
4. LOUVERED EXHAUST VENT (DRYER VENT SHOWN)
5. 36" CLEARANCE SPACE TO ADJACENT OPERABLE WINDOWS OR DOORS AND FROM PROPERTY LINES - PER CALIFORNIA MECHANICAL CODE *(CMC SECTION 504.5)*

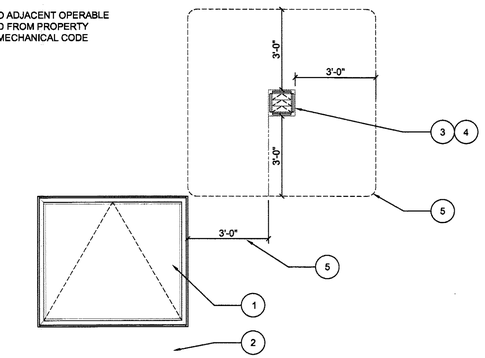

1 / A516 EXHAUST VENT CLEARANCE DETAIL
3/8" = 1'-0"

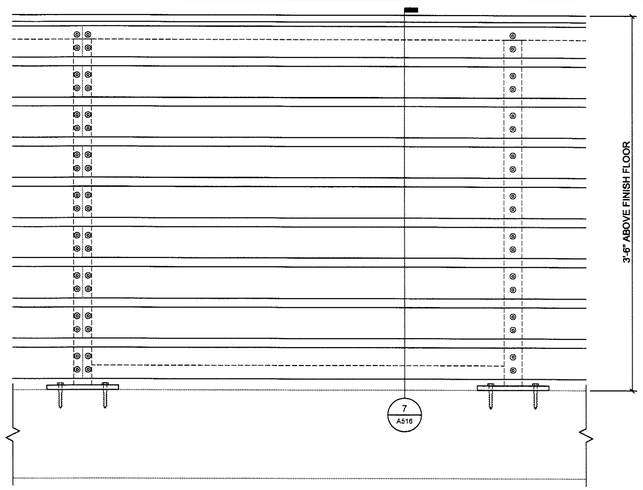

8 / A516 DECK GUARDRAIL ELEVATION DETAIL
1 1/2" = 1'-0"

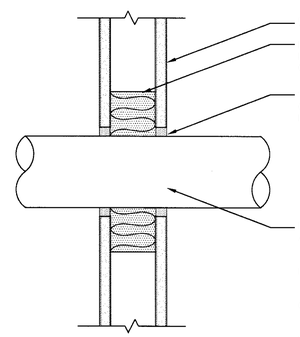

UL SYSTEM W-L-1065

5 / A516 FIRE RATED WALL PENETRATION DETAIL
3" = 1'-0"

1. OUTLINE OF WASHING MACHINE - VERIFY W/ ACTUAL PRODUCT SPECIFICATIONS FOR SIZE AND UTILITY LOCATION - (LG #WT4801CW (27"W X 43⅞"H X 29"D) SHOWN)
2. RECESS WASHING MACHINE OUTLET BOX - OATEY #38981 (9"W X 6¾" H X 3.7" D) OR EQUAL
3. 120V GFIC ELECTRICAL OUTLET - PER ELECTRICAL NOTES
4. OUTLINE OF DRYER - VERIFY W/ ACTUAL PRODUCT SPECIFICATIONS FOR GAS/ELECTRIC, SIZE, AND UTILITY LOCATION - (LG #DLE4801W (ELECTRIC-27"W X 43⅞"H X 29"D) SHOWN)
5. ½" GAS BIB W/ ¼ TURN GLOBE VALVE + 15" (VERIFY LOCATION WITH UNIT SPECIFICATIONS)
6. 4" DIA. DRYER VENT W/ HOOK UP FLANGE - TO EXTERIOR
7. 120V GFIC ELECTRICAL OUTLET PER ELECTRICAL NOTES (IF ELECTRIC UNITS SPECIFY - PROVIDE 220V)
8. OUTLINE OF ENCLOSURE ROOM (SEE PLAN FOR ACTUAL SIZE)
9. 2 X 4 WALL FRAMING @ 16" O.C. (BEYOND) - PROVIDE BACKING FOR UTILITY CONNECT AND DRYER VENT
10. ⅝" TYPE 'X" GYPSUM BOARD - SEE INTERIOR FINISH SCHEDULDLE FOR TEXTURE AND FINISH

NOTES:

A. THIS UTILITY CONFIGURATION FOR - SIDE BY SIDE WASHER AND DRYER
B. REFER TO FLOOR PLAN FOR EXACT LAYOUT AND CONFIGURATION

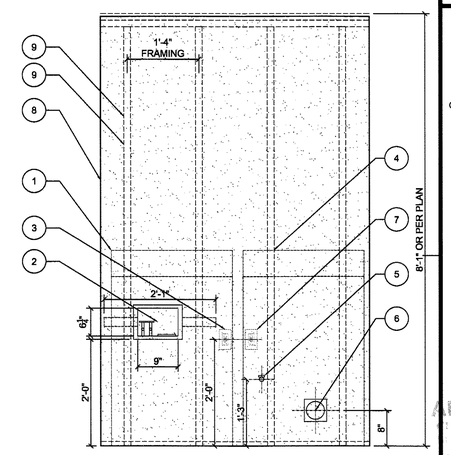

2 / A516 RECESSED LAUNDRY UTILITY DETAIL
3/4" = 1'-0"

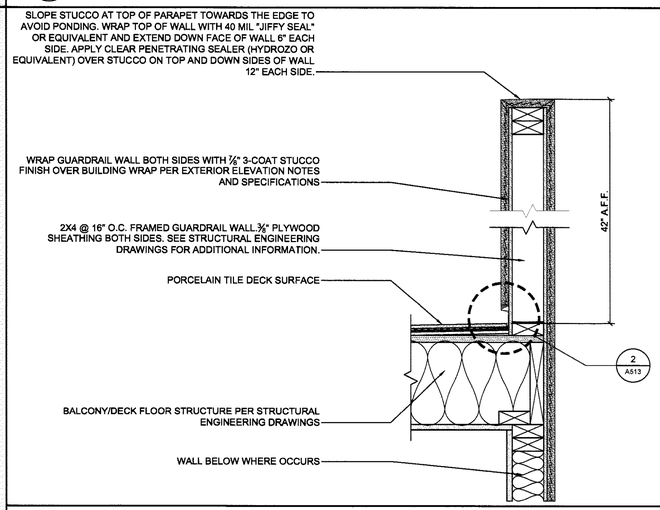

6 / A516 EXTERIOR GUARDRAIL WALL DETAIL
1 1/2" = 1'-0"

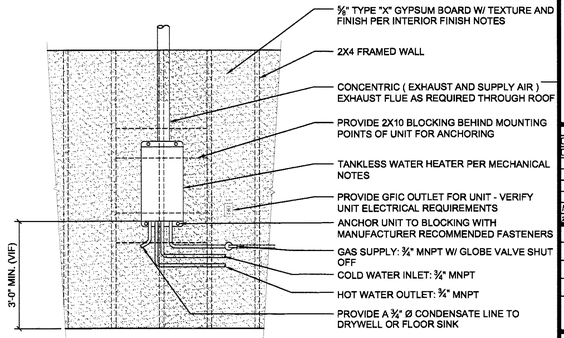

ALSO SEE

NOTE: UNIT TO BE INSTALLED PER MANUFACTURE'S INSTALLATION INSTRUCTIONS BY A REGISTERED INSTALLER

3 / A516 TANKLESS WATER HEATER MOUNTING DETAIL
1/2" = 1'-0"

FIELD COPY

9 / A516

TECHNE
DESIGN | DEVELOPMENT
3956 30th Street, San Diego, CA 92104
techne-us.com sustainablearchitect.org
O 619-940-5814 m 313-595-5814

CONSULTANTS

LICENSED ARCHITECT
MICHAEL RENE MORTON
C-19371
REN. 04/30/2015
STATE OF CALIFORNIA

414 29th Avenue
Oakland, CA 94601

OWNER

29th Avenue Group, LLC
1211 Embarcadero Way, Suite D
Oakland, CA 94606

BuildZig
Dream it. Build it. Zig it.

APPROVED
CITY OF OAKLAND
BUILDING SERVICES
ELECT. MECH. PLUM.
NOT CHECKED

MARK	DATE	DESCRIPTION
01	11.10.14	1st Building Permit Submittal
02	02.23.15	2nd Building Permit Submittal

29/4/2015 11:28:03 AM

PROJECT NO: 1410

CAD DWG FILE: ~~A511 DETAILS (ABHAY SCHWEITZER'S CONFLICTED COPY 2014-12-01.DWG~~

DRAWN BY: A.S., M.M., J.C., J.S.

CHK'D BY: A.S., M.M

COPYRIGHT: TECHNE expressly reserves its common law copyright and other property rights in this document. This document shall not be reproduced, copied, changed or disclosed in any form or manner whatsoever without first obtaining the express written consent of TECHNE.

SHEET TITLE

DETAILS

A516

SHEET 41 OF 100

N0.	Fire Rating	Ref. Design No.		Description
LIGHT COLUMN		(10WF-49)		
1	3 hr.	UL GA	X510 CM 3120	Three layers of 5/8"(15.9mm)Fire-Shield Gypsum Wallboard furred column by 1 5/8" (41.3mm)steel studs at each corner.
2	4 hr.	UL	X501	Four layers of 5/8"(15.9mm)Fire-Shield G Gypsum Wallboard on each side of column. Inner two layers furred from column by 1 5/8" (41.3mm) steel studs at column corners. Outer two layers attached to 2 x 2"(51mm x 51mm) sheet metal angles which are applied at corners oner first two layers of board.
HEAVY COLUMN		(14WF-228)		
3	2 hr.	UL GA	X520 CM 2110	One layer of 1/2"(12.7mm)Fire-Shield G Gypsum Wallboard furred from column by 1 5/8" (41.3mm)steel studs at each corner.
4	3 hr.	UL GA	X513 CM 3130	Two layers of 1/2"(12.7mm)Fire-Shield G Gypsum Wallboard furred from column by 1 5/8" (41.3mm)steel studs at each corner.

7 / A517 GYPSUM WALLBOARD COLUMN FIREPROOFING
NTS.

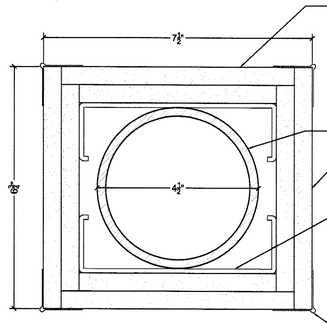

(2) LAYERS OF ½" TYPE "X" GYPSUM BOARD. BASE LAYER OF TYPE "X" GYPSUM BOARD APPLIED WITHOUT HORIZONTAL JOINTS TO 5½" STEEL STUDS WITH 1" TYPE S DRYWALL SCREWS @ 24" O.C. FACE LAYER ½" TYPE "X" GYP. BOARD APPLIED WITHOUT HORIZONTAL JOINTS TO STUDS WITH 1¾" TYPE S DRYWALL SCREWS @ 12" O.C.

EXISTING 4½"Ø (V.I.F.) STEEL COLUMN

FINISH AND TEXTURE ON DRYWALL PER INTERIOR FINISH NOTES

5½" STEEL C STUD FASTENED TO STEEL COLUMN WITH HILTI X-S 13 THP .27 CAL COMBO FASTENERS @ 12" O.C.

METAL CORNER BEAD APPLIED TO ALL CORNERS WITH 1" TYPE S DRYWALL SCREWS @ 12" O.C. IN EACH FLANGE. JOINT COMPOUND ⅛" THICK APPLIED OVER CORNER BEAD

OPTION 1

4 / A517 1 HOUR FIRE RATED COLUMN DETAIL
6" = 1'-0"

ASSEMBLY PER UL ASSEMBLY NO. W-L-2452

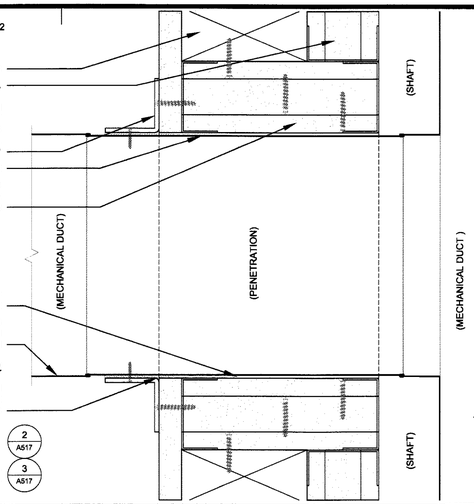

PROPOSED WALLS PER PLANS

2 HOUR RATED SHAFT WALL

1½" X 1½" X 18 GA. RETAINING ANGLES ON ONE SIDE FASTENED @ 8" O.C. TO SHAFT WALL, SLEEVE AND FLOOR W/ TYPE S SCREWS AND OVERLAPPING STRUCTURAL OPENING MIN. 1"

STEEL DUCT SLEEVE

OPENING TO HAVE SAME FIRE RATING AS SHAFT AND TO BE CONSTRUCTED IN THE SAME MANNER

MAINTAIN ⅛" CLEARANCE PER FOOT OF WIDTH OR HEIGHT OF SLEEVE

DUCT PER MECHANICAL ENGINEERING DRAWINGS ATTACHED TO SLEEVE WITH BREAK-AWAY CONNECTION

APPLY CONTINUOUS BEAD OF ABESCO LTD CP310 FR ACRYLIC INTUMESCENT CAULK AT INTERFACE OF SLEEVE AND GYPSUM BOARD IMMEDIATELY BEFORE INSTALLATION OF RETAINING ANGLES

FOR FIRE RATED SHAFT WALL, SEE DETAIL 2 / A517

FOR FIRE RATED SHAFT WALL ATTACHMENT, SEE DETAIL 3 / A517

1 / A517 SHAFT WALL DUCT PENETRATION
6" = 1'-0"

ROOF ACCESS HATCH GUARDRAIL

1. 1½" Ø GALVANIZED TUBE STEEL POST @ 4' O.C. PRIME AND PAINT.
2. 1½" Ø GALVANIZED TUBE STEEL TOP/BOTTOM RAIL PRIME AND PAINT.
3. ATTACHMENT PLATE PER STRUCTURAL ENGINEERING DRAWINGS. SET IN BED OF SEALANT.
4. CARLISLE TPO PRE-FABRICATED PIPE FLASHING.

ALSO SEE DETAILS: 4 / A511, 7 / A511

NOTES:

- MINIMUM GUARD HEIGHT SHALL BE 42".
- OPENINGS SHALL NOT ALLOW PASSAGE OF A SPHERE 21" IN DIAMETER.

ROOF STRUCTURE PER PLANS AS OCCURS. PROVIDE 4X SOLID BLOCKING UNDERNEATH U.N.O. BY STRUCTURAL

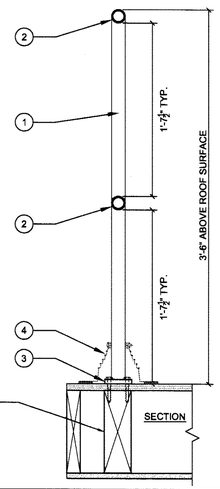

3

8 / A517 ROOF GUARDRAIL DETAIL
1 1/2" = 1'-0"

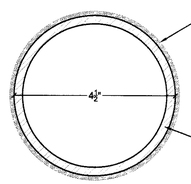

ALBI CLAD TF WATER BASED INTUMESCANT COATING APPLIED AT MANUFACTURER SPECIFIED THICKNESS FOR DESIRED FIRE RATING. VERIFY FINISH COLOR WITH ARCHITECT

EXISTING 4½"Ø (V.I.F.) STEEL COLUMN

UL DESIGNATION X-638
ALBI CLAD TF - OR APPROVED EQUAL
BY
Albi Manufacturing
Division of StanChem Inc.
401 Berlin St., East Berlin, CT 06023
860/828-0571 Fax: 860/828-3297
http://www.albi.com

OPTION 2

5 / A517 1 HOUR FIRE RATED COLUMN DETAIL
6" = 1'-0"

TWO HOUR RATED WALL ASSEMBLY PER UL DESIGN NO. U529

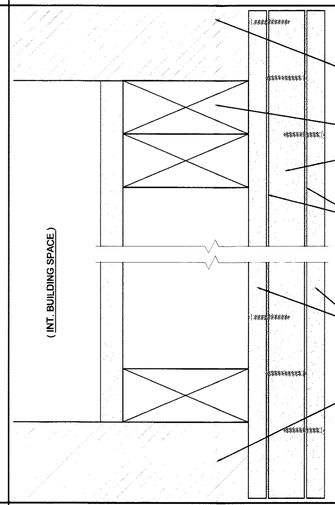

FLOOR/CEILING ASSEMBLY

WOOD FRAMED WALLS PER PLANS

1" THICK, 24" WIDE GYPSUM BOARD LINER PANELS APPLIED VERTICALLY AND SECURED TO ½" THICK GYPSUM WALLBOARD (WITH JOINTS STAGGERED MIN. 12") WITH 1 ½" LONG TYPE G STEEL SCREWS SPACED 24" O.C. IN BOTH DIRECTIONS

JOINT COMPOUND APPLIED UNIFORMLY TO BOTH SURFACES OF GYPSUM WALLBOARD LINER PANELS WITH A NOTCHED SPREADER ¼" HIGH BY ¼" WIDE SPACED 1" O.C.

½" THICK, 4' WIDE TYPE C GYPSUM BOARD APPLIED VERTICALLY AND SECURED TO LINER PANEL (WITH JOINTS CENTERED OVER LINER PANEL) WITH 1 ½" LONG TYPE G STEEL SCREWS SPACED 24" O.C. IN BOTH DIRECTIONS. JOINTS OF FACE LAYER OFFSET 24".

FLOOR/CEILING ASSEMBLY

FOR THROUGH WALL PENETRATIONS, SEE DETAIL 1 / A517

FOR ATTACHMENT TO WALLS, SEE DETAIL 3 / A517

2 / A517 2 HOUR FIRE RATED SHAFT WALL
6" = 1'-0"

DETAIL PER ITEM 1-7.1 OF CBC TABLE 720.1

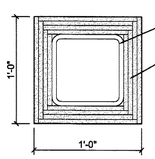

STEEL COLUMN PER STRUCT

(4) LAYERS ½" TYPE "X" GYPSUM WALL BOARD, APPLIED ADEHISIVELY PER ITEM 1-7.1 OF CBC TABLE 720.1 TO ACHIEVE 2 HOUR FIRE RATING

6 / A517 2-HOUR COLUMN @ LOBBY
1-1/2" = 1'-0"

TWO HOUR RATED WALL ASSEMBLY PER UL DESIGN NO. U529

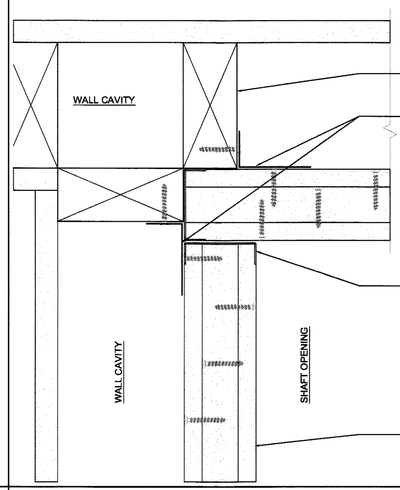

PROPOSED WALLS PER PLANS

1" X 2" "L" 25 MSG GALV STEEL RUNNERS TO SUPPORT THE WALL ALONG THE PERIMETER. ANGLES MECHANICALLY ATTACHED TO FRAMING @ 24" O.C. & TO GYPSUM BOARD W/ 1½" LONG TYPE G STEEL SCREWS @ 24" O.C.

MECHANICALLY ATTACH 2" X 15/16" METAL CHANNEL TO VERTICAL EDGE OF EACH WALL SECTION W/ 1" LONG TYPE S SCREWS @ 24" O.C. PRIOR TO ATTACHMENT TO FRAMING

TWO HOUR RATED SHAFT WALL PER

3 / A517 2 HOUR RATED SHAFT WALL ATTACHMENT
6" = 1'-0"

FIELD COPY

9 / A517

TECHNE
DESIGN | DEVELOPMENT
3956 30th Street, San Diego, CA 92104
techne-us.com sustainablearchitect.org
o 619-940-5814 m 313-595-5814

CONSULTANTS

LICENSED ARCHITECT MICHAEL RENE MORTON C-19371 REN. 04/30/2015 STATE OF CALIFORNIA

414 29th Avenue
Oakland, CA 94601

OWNER

29th Avenue Group, LLC
1211 Embarcadero Way, Suite D
Oakland, CA 94606

BuildZig
Dream it. Build it. Zig it.

APPROVED
CITY OF OAKLAND
BUILDING SERVICES
PLAN REVIEW
DIVISION LAYOUT
APPROVED
INSPECTION CONTROL
SEE IS REPORT ON FILE
SEE CT MECH, PLUMB
NOT CHECKED

MARK	DATE	DESCRIPTION
01	07.17.14	30% - Design Development Submittal
02	08.04.14	Revised Elevator
03	08.15.14	Client Plan Revision
04	08.28.14	90% - Design Development Submittal
05	09.11.14	Client Plan Revision
06	11.10.14	1st Building Permit Submittal

3/14/2015 11:44:22 AM

PROJECT NO: 1410

CAD DWG FILE: ~~A517 DETAILS.DWG~~

DRAWN BY: A.S, M.M., J.C., J.S.

CHK'D BY: A.S., M.M

COPYRIGHT: TECHNE expressly reserves its common law copyright and other property rights in this document. This document shall not be reproduced, copied, changed or disclosed in any form or manner whatsoever without first obtaining the express written consent of TECHNE.

SHEET TITLE

DETAILS

A517

SHEET OF 100

DOOR AND FRAME SCHEDULE

MARK	TYPE	DOOR SIZE WD	DOOR SIZE HGT	DOOR SIZE THK	DOOR MATL	DOOR GLAZING	FRAME MATL	FINISH	FIRE RATING LABEL	MANUFACTURER / MODEL	HARDWARE	NOTES
1	Hinged - single	--	--	--	Aluminum	Tempered	Aluminum	Clear anodized	--		--	See Storefront Elevations, sheet A604
2	Hinged - single	3'-0"	7'-0"	1 3/4"	Metal	--	Metal	Primed	45 MINUTES		--	Self-closing
3	Hinged - single	3'-0"	7'-0"	1 3/4"	Metal	--	Metal	Primed	90 MINUTES		--	Self-closing
4	Overhead Coiling- Garage	12'-0"	9'-0"	--	Aluminum	--	Metal	Powder Coated	--	Overhead Door Co. / model 676	--	Security Grille - Brick Pattern
5	Hinged - single	3'-0"	8'-0"	1 3/4"	Metal	--	Metal	Primed	45 MINUTES		--	Self-closing
6	Hinged - single	3'-0"	7'-0"	1 3/4"	Metal	--	Metal	Primed	45 MINUTES	Self-closing	--	Self-closing
7	Hinged - single	3'-0"	7'-0"	1 3/4"	Metal	--	Metal	Primed	90 MINUTES		--	Self-closing
8	Hinged - single	3'-0"	7'-0"	1 3/4"	Wood - solid core	Tempered	Wood	Primed	--		--	
9	Pocket - single	3'-0"	6'-8"	1 3/4"	Wood	--	Wood	Primed	--		--	
10	Hinged - single	3'-0"	7'-0"	1 3/4"	Aluminum	Tempered	Aluminum	Clear anodized	--		--	
11	Hinged - single	3'-0"	7'-0"	1 3/4"	Wood - solid core	Tempered	Wood	Primed	--		--	
12	Hinged - single	3'-0"	6'-8"	1 3/4"	Wood	--	Wood	Primed	--		--	
13	Hinged - single	3'-0"	8'-0"	1 3/4"	Aluminum	Tempered	Aluminum	Clear anodized	--		--	
14	Hinged - single	2'-4"	6'-8"	1 3/4"	Wood	--	Wood	Primed	--		--	
15	Hinged - single	3'-0"	7'-0"	1 3/4"	Aluminum	Tempered	Aluminum	Clear anodized	--		--	
16	Hinged - single	2'-4"	6'-8"	1 3/4"	Wood	--	Wood	Primed	--		--	
17	Hinged - single	3'-0"	6'-8"	1 3/4"	Wood	--	Wood	Primed	--		--	
18	Hinged - single	3'-0"	7'-0"	1 3/4"	Wood - solid core	Tempered	Wood	Primed	--		--	
19	Hinged - single	3'-0"	6'-8"	1 3/4"	Wood	--	Wood	Primed	--		--	
20	Hinged - single	2'-4"	6'-8"	1 3/4"	Wood	--	Wood	Primed	--		--	
21	Hinged - single	3'-0"	7'-0"	1 3/4"	Wood - solid core	Tempered	Wood	Primed	45 MINUTES		--	Self-closing
22	Hinged - single	3'-0"	7'-0"	1 3/4"	Wood - solid core	Tempered	Wood	Primed	20 MINUTES		--	Self-closing
23	Hinged - single	3'-0"	6'-8"	1 3/4"	Wood	--	Wood	Primed	--		--	
24	Hinged - single	3'-0"	7'-0"	1 3/4"	Aluminum	Tempered	Aluminum	Clear anodized	--		--	
25	Hinged - single	3'-0"	7'-0"	1 3/4"	Wood - solid core	Tempered	Wood	Primed	--		--	
26	Hinged - single	3'-0"	6'-8"	1 3/4"	Wood	--	Wood	Primed	--		--	
27	Hinged - single	3'-0"	7'-0"	1 3/4"	Aluminum	Tempered	Aluminum	Clear anodized	--		--	
28	Hinged - single	2'-4"	6'-8"	1 3/4"	Wood	--	Wood	Primed	--		--	
29	Hinged - single	3'-0"	7'-0"	1 3/4"	Wood - solid core	Tempered	Wood	Primed	--		--	
30	Hinged - single	3'-0"	6'-8"	1 3/4"	Wood	--	Wood	Primed	--		--	
31	Bifold - double	5'-0"	6'-8"	1 3/4"	Wood	--	Wood	Primed	--		--	
32	Hinged - single	2'-4"	6'-8"	1 3/4"	Wood	--	Wood	Primed	--		--	
33	Hinged - single	3'-0"	6'-8"	1 3/4"	Wood	--	Wood	Primed	--		--	
34	Bifold - single	2'-2"	6'-8"	1 3/4"	Wood	--	Wood	Primed	--		--	
35	Sliding - double	3'-10"	6'-8"	1 3/4"	Wood	--	Wood	Primed	--		--	
36	Hinged - single	2'-6"	6'-8"	1 3/4"	Wood	--	Wood	Primed	--		--	
37	Bifold - single	2'-2"	6'-8"	1 3/4"	Wood	--	Wood	Primed	--		--	
38	Hinged - single	2'-6"	6'-8"	1 3/4"	Wood	--	Wood	Primed	--		--	
39	Hinged - single	2'-10"	6'-8"	1 3/4"	Wood	--	Wood	Primed	--		--	
40	Sliding - double	7'-0"	6'-8"	1 3/4"	Wood	--	Wood	Primed	--		--	
41	Hinged - single	3'-0"	8'-0"	1 3/4"	Aluminum	Tempered	Aluminum	Clear anodized	--		--	
42	Hinged - single	2'-8"	6'-8"	1 3/4"	Wood	--	Wood	Primed	--		--	
43	Hinged - single	2'-8"	6'-8"	1 3/4"	Wood	--	Wood	Primed	--		--	
44	Hinged - single	2'-8"	6'-8"	1 3/4"	Wood	--	Wood	Primed	--		--	
45	Sliding - double	8'-0"	6'-8"	1 3/4"	Wood	--	Wood	Primed	--		--	
46	--	--	--	--	--	--	--	--	--		--	
47	Hinged - single	3'-0"	7'-0"	1 3/4"	Aluminum	Tempered	Aluminum	Clear anodized	--		--	
48	Bifold - single	2'-8"	6'-8"	1 3/4"	Wood	--	Wood	Primed	--		--	
49	Sliding - double	6'-6"	6'-8"	1 3/4"	Wood	--	Wood	Primed	--		--	
50	Hinged - single	3'-0"	6'-8"	1 3/4"	Wood	--	Wood	Primed	--		--	
51	Hinged - single	3'-0"	6'-8"	1 3/4"	Wood	--	Wood	Primed	--		--	
52	Sliding - double	8'-0"	6'-8"	1 3/4"	Wood	--	Wood	Primed	--		--	
53	Hinged - single	3'-0"	7'-0"	1 3/4"	Aluminum	Tempered	Aluminum	Clear anodized	--		--	
54	Hinged - single	3'-0"	6'-8"	1 3/4"	Wood	--	Wood	Primed	--		--	
55	Hinged - single	2'-6"	6'-8"	1 3/4"	Wood	--	Wood	Primed	--		--	
56	Hinged - single	2'-6"	6'-8"	1 3/4"	Wood	--	Wood	Primed	--		--	
57	Sliding - double	4'-3"	6'-8"	1 3/4"	Wood	--	Wood	Primed	--		--	
58	Hinged - single	3'-0"	7'-0"	1 3/4"	Aluminum	Tempered	Aluminum	Clear anodized	--		--	
59	Hinged - single	2'-8"	6'-8"	1 3/4"	Wood	--	Wood	Primed	--		--	
60	Bifold - single	2'-2"	6'-8"	1 3/4"	Wood	--	Wood	Primed	--		--	
61	Hinged - single	2'-6"	6'-8"	1 3/4"	Wood	--	Wood	Primed	--		--	
62	Sliding - double	10'-0"	6'-8"	1 3/4"	Wood	--	Wood	Primed	--		--	
63	Bifold - single	3'-0"	6'-8"	1 3/4"	Wood	--	Wood	Primed	--		--	
64	Hinged - single	2'-8"	6'-8"	1 3/4"	Wood	--	Wood	Primed	--		--	
65	Hinged - single	3'-0"	7'-0"	1 3/4"	Aluminum	Tempered	Aluminum	Clear anodized	--		--	
66	Sliding - double	10'-0"	6'-8"	1 3/4"	Wood	--	Wood	Primed	--		--	
67	Hinged - single	2'-8"	6'-8"	1 3/4"	Wood	--	Wood	Primed	45 MINUTES		--	Self-closing
68	Hinged - single	3'-0"	7'-0"	1 3/4"	Aluminum	Tempered	Aluminum	Clear anodized	--		--	
69	Hinged - single	3'-0"	7'-0"	1 3/4"	Wood - solid core	Tempered	Wood	Primed	--		--	
70	Pocket - single	3'-0"	6'-8"	1 3/4"	Wood	--	Wood	Primed	--		--	
71	Hinged - single	3'-0"	7'-0"	1 3/4"	Wood - solid core	Tempered	Wood	Primed	--		--	
72	Hinged - single	3'-0"	6'-8"	1 3/4"	Wood	--	Wood	Primed	--		--	
73	Hinged - single	3'-0"	8'-0"	1 3/4"	Aluminum	Tempered	Aluminum	Clear anodized	--		--	
74	Hinged - single	2'-4"	6'-8"	1 3/4"	Wood	--	Wood	Primed	--		--	
75	Hinged - single	3'-0"	7'-0"	1 3/4"	Wood - solid core	Tempered	Wood	Primed	--		--	
76	Hinged - single	2'-4"	6'-8"	1 3/4"	Wood	--	Wood	Primed	--		--	
77	Hinged - single	3'-0"	6'-8"	1 3/4"	Wood	--	Wood	Primed	--		--	
78	Hinged - single	3'-0"	7'-0"	1 3/4"	Aluminum	Tempered	Aluminum	Clear anodized	--		--	
79	Hinged - single	3'-0"	7'-0"	1 3/4"	Wood - solid core	Tempered	Wood	Primed	--		--	
80	Hinged - single	3'-0"	6'-8"	1 3/4"	Wood	--	Wood	Primed	--		--	
81	Hinged - single	3'-0"	7'-0"	1 3/4"	Aluminum	Tempered	Aluminum	Clear anodized	--		--	
82	Hinged - single	2'-4"	6'-8"	1 3/4"	Wood	--	Wood	Primed	--		--	
83	Hinged - single	3'-0"	7'-0"	1 3/4"	Wood - solid core	Tempered	Wood	Primed	45 MINUTES		--	Self-closing
84	Hinged - single	3'-0"	7'-0"	1 3/4"	Wood - solid core	Tempered	Wood	Primed	20 MINUTES		--	
85	Hinged - single	2'-4"	6'-8"	1 3/4"	Wood	--	Wood	Primed	--		--	
86	Hinged - single	3'-0"	6'-8"	1 3/4"	Wood	--	Wood	Primed	--		--	
87	Hinged - single	3'-0"	7'-0"	1 3/4"	Wood - solid core	Tempered	Wood	Primed	20 MINUTES		--	
88	Hinged - single	3'-0"	6'-8"	1 3/4"	Wood	--	Wood	Primed	--		--	
89	Hinged - single	2'-4"	6'-8"	1 3/4"	Wood	--	Wood	Primed	--		--	
90	Hinged - single	2'-2"	6'-8"	1 3/4"	Wood	--	Wood	Primed	--		--	
91	Hinged - single	3'-0"	7'-0"	1 3/4"	Aluminum	Tempered	Aluminum	Clear anodized	--		--	
92	Hinged - single	2'-4"	6'-8"	1 3/4"	Wood	--	Wood	Primed	--		--	
93	Hinged - single	3'-0"	6'-8"	1 3/4"	Wood	--	Wood	Primed	--		--	
94	Hinged - single	3'-0"	7'-0"	1 3/4"	Aluminum	Tempered	Aluminum	Clear anodized	--		--	
95	Hinged - single	3'-0"	9'-0"	1 3/4"	Aluminum	Tempered	Aluminum	Clear anodized	--		--	
96	Hinged - single	3'-0"	6'-8"	1 3/4"	Wood	--	Wood	Primed	--		--	
97	Bifold - double	5'-0"	6'-8"	1 3/4"	Wood	--	Wood	Primed	--		--	
98	Hinged - single	2'-6"	6'-8"	1 3/4"	Wood	--	Wood	Primed	--		--	
99	Bifold - double	2'-2"	6'-8"	1 3/4"	Wood	--	Wood	Primed	--		--	
100	Bifold - single	2'-4"	6'-8"	1 3/4"	Wood	--	Wood	Primed	--		--	
101	Hinged - single	2'-8"	6'-8"	1 3/4"	Wood	--	Wood	Primed	--		--	
102	Hinged - single	2'-8"	6'-8"	1 3/4"	Wood	--	Wood	Primed	--		--	
103	Bifold - double	6'-0"	6'-8"	1 3/4"	Wood	--	Wood	Primed	--		--	
104	Hinged - single	3'-0"	8'-0"	1 3/4"	Aluminum	Tempered	Aluminum	Clear anodized	--		--	
105	Hinged - single	2'-8"	6'-8"	1 3/4"	Wood	--	Wood	Primed	--		--	
106	Bifold - double	4'-0"	6'-8"	1 3/4"	Wood	--	Wood	Primed	--		--	
107	Bifold - single	3'-0"	6'-8"	1 3/4"	Wood	--	Wood	Primed	--		--	
108	Hinged - single	2'-8"	6'-8"	1 3/4"	Wood	--	Wood	Primed	--		--	
109	Hinged - single	2'-8"	6'-8"	1 3/4"	Wood	--	Wood	Primed	--		--	
110	Hinged - single	2'-8"	6'-8"	1 3/4"	Wood	--	Wood	Primed	--		--	
111	Bifold - double	5'-0"	6'-8"	1 3/4"	Wood	--	Wood	Primed	--		--	
112	Hinged - single	3'-0"	7'-0"	1 3/4"	Aluminum	Tempered	Aluminum	Clear anodized	--		--	
113	Hinged - single	2'-8"	6'-8"	1 3/4"	Wood	--	Wood	Primed	--		--	
114	Bifold - double	5'-0"	6'-8"	1 3/4"	Wood	--	Wood	Primed	--		--	
115	Bifold - single	3'-0"	6'-8"	1 3/4"	Wood	--	Wood	Primed	--		--	
116	Hinged - single	2'-8"	6'-8"	1 3/4"	Wood	--	Wood	Primed	--		--	
117	Hinged - single	2'-10"	6'-8"	1 3/4"	Wood	--	Wood	Primed	--		--	
118	Bifold - double	5'-0"	6'-8"	1 3/4"	Wood	--	Wood	Primed	--		--	
119	Hinged - single	2'-8"	6'-8"	1 3/4"	Wood	--	Wood	Primed	--		--	
120	Hinged - single	3'-0"	7'-0"	1 3/4"	Aluminum	Tempered	Aluminum	Clear anodized	--		--	
121	Hinged - single	3'-0"	6'-8"	1 3/4"	Wood	--	Wood	Primed	--		--	
122	Sliding - double	8'-0"	6'-8"	1 3/4"	Wood	--	Wood	Primed	--		--	
123	Bifold - single	2'-8"	6'-8"	1 3/4"	Wood	--	Wood	Primed	--		--	
124	Hinged - single	2'-8"	6'-8"	1 3/4"	Wood	--	Wood	Primed	--		--	
125	Hinged - single	2'-8"	6'-8"	1 3/4"	Wood	--	Wood	Primed	--		--	
126	Hinged - single	2'-6"	6'-8"	1 3/4"	Wood	--	Wood	Primed	--		--	
127	Hinged - single	2'-8"	6'-8"	1 3/4"	Wood	--	Wood	Primed	--		--	
128	Hinged - single	3'-0"	7'-0"	1 3/4"	Aluminum	Tempered	Aluminum	Clear anodized	--		--	
129	Bifold - double	5'-4"	6'-8"	1 3/4"	Wood	--	Wood	Primed	--		--	
130	Hinged - single	2'-8"	6'-8"	1 3/4"	Wood	--	Wood	Primed	--		--	
131	Hinged - single	2'-6"	6'-8"	1 3/4"	Wood	--	Wood	Primed	--		--	
132	Hinged - single	3'-0"	7'-0"	1 3/4"	Aluminum	Tempered	Aluminum	Clear anodized	--		--	
133	Hinged - single	2'-8"	6'-8"	1 3/4"	Wood	--	Wood	Primed	--		--	
134	Bifold - single	2'-2"	6'-8"	1 3/4"	Wood	--	Wood	Primed	--		--	
135	Hinged - single	2'-8"	6'-8"	1 3/4"	Wood	--	Wood	Primed	--		--	
136	Sliding - double	8'-0"	6'-8"	1 3/4"	Wood	--	Wood	Primed	--		--	
137	Hinged - single	2'-8"	6'-8"	1 3/4"	Wood	--	Wood	Primed	--		--	
138	Hinged - single	2'-8"	6'-8"	1 3/4"	Wood	--	Wood	Primed	--		--	
139	Hinged - single	3'-0"	7'-0"	1 3/4"	Aluminum	Tempered	Aluminum	Clear anodized	--		--	
140	Hinged - single	2'-8"	6'-8"	1 3/4"	Wood	--	Wood	Primed	--		--	
141	Hinged - single	3'-0"	7'-0"	1 3/4"	Metal	--	Metal	Primed	90 MINUTES		--	Self-closing
142	Pocket - single	2'-8"	6'-8"	1 3/4"	Wood	--	Wood	Primed	--		--	
143	Hinged - single	2'-4"	6'-8"	1 3/4"	Wood	--	Wood	Primed	--		--	
144	--	--	--	--	--	--	--	--	--		--	
145	--	--	--	--	--	--	--	--	--		--	
146	--	--	--	--	--	--	--	--	--		--	
147	--	--	--	--	--	--	--	--	--		--	
148	--	--	--	--	--	--	--	--	--		--	
149	--	--	--	--	--	--	--	--	--		--	
150	--	--	--	--	--	--	--	--	--		--	
151	--	--	--	--	--	--	--	--	--		--	
152	--	--	--	--	--	--	--	--	--		--	
153	--	--	--	--	--	--	--	--	--		--	
154	--	--	--	--	--	--	--	--	--		--	
155	--	--	--	--	--	--	--	--	--		--	
156	--	--	--	--	--	--	--	--	--		--	
157	--	--	--	--	--	--	--	--	--		--	
158	Sliding - double	6'-0"	6'-8"	1 3/4"	Wood	--	Wood	Primed	--		--	
159	Hinged - single	2'-6"	6'-8"	1 3/4"	Wood	--	Wood	Primed	--		--	
160	Sliding - double	5'-3"	6'-8"	1 3/4"	Wood	--	Wood	Primed	--		--	

NOTE:
EXTERIOR DOORS AND WINDOWS SHALL COMPLY WITH THE MINIMUM SOUND ISOLATION REQUIREMENTS AS FOLLOWS
- OITC: 28
- STC: 33

TECHNE
DESIGN | DEVELOPMENT
3956 30th Street, San Diego, CA 92104
techne-us.com sustainablearchitect.org
o 619-940-5814 m 313-595-5814

CONSULTANTS

LICENSED ARCHITECT
MICHAEL RENE MORTON
C-19371
REN. 04/30/2015
STATE OF CALIFORNIA

414 29th Avenue
Oakland, CA 94601

OWNER

29th Avenue Group, LLC
1211 Embarcadero Way, Suite D
Oakland, CA 94606

BuildZig
Dream it. Build it. Zig it.

MARK	DATE	DESCRIPTION
01	11.10.14	1st Building Permit Submittal
02	02.23.15	2nd Building Permit Submittal
03	03.13.15	3rd Building Permit Submittal
04	04.02.15	Elevator Revision
05	04.09.15	Permit Set
06	08.19.15	Window Changes

9/8/2015 10:46:30 AM

PROJECT NO: 1410
CAD DWG FILE: A601 - DOOR AND WINDOW SCHEDULES.DWG
DRAWN BY: A.S, M.M., J.C., J.S.
CHK'D BY: A.S., M.M

COPYRIGHT: TECHNE expressly reserves its common law copyright and other property rights in this document. This document shall not be reproduced, copied, changed or disclosed in any form or manner whatsoever without first obtaining the express written consent of TECHNE.

SHEET TITLE
DOOR AND FRAME SCHEDULE
3 4 6

A601
SHEET - OF 100

WINDOW SCHEDULE

MARK	TYPE	SIZE WIDTH	SIZE HEIGHT	MATERIAL	GLAZING	FINISH	MANUFACTURER / MODEL	HARDWARE	NOTES
1	Casement	4'-9"	5'-0"	Aluminum	Low-E	Clear anodized		--	
2	Fixed	6'-0"	5'-6"	Aluminum	Low-E	Clear anodized		--	
3	Fixed	6'-0"	5'-6"	Aluminum	Low-E	Clear anodized		--	
4	Fixed	6'-0"	5'-6"	Aluminum	Low-E	Clear anodized		--	
5	Casement	3'-4"	3'-6"	Aluminum	Low-E	Clear anodized		--	
6	--	--	--	--	--	--		--	
7	Fixed	3'-4"	3'-6"	Aluminum	Low-E	Clear anodized		--	
8	Awning	3'-4"	2'-6"	Aluminum	Low-E	Clear anodized		--	
9	Fixed	1-6"	5'-0"	Aluminum	Low-E	Clear anodized		--	
10	Casement	3'-4"	3'-6"	Aluminum	Low-E	Clear anodized		--	
11	Casement	3'-4"	3'-6"	Aluminum	Low-E	Clear anodized		--	
12	--	--	--	--	--	--		--	
13	Casement	2'-6"	3'-6"	Aluminum	Low-E	Clear anodized		--	
14	--	--	--	--	--	--		--	
15	Fixed	3'-0"	5'-6"	Aluminum	Low-E - Solarban 60	Clear anodized	SAFTI SuperLite II-XL-60	--	60 Minute Fire Rated. Tested to Fire Rated Wall Assembly requirements per ASTM E119 and NFPA 251
16	Awning	3'-4"	2'-6"	Aluminum	Low-E	Clear anodized		--	
17	Awning	3'-4"	3'-6"	Aluminum	Low-E	Clear anodized		--	
18	Casement	3'-4"	3'-6"	Aluminum	Low-E	Clear anodized		--	
19	Casement	3'-4"	3'-6"	Aluminum	Low-E	Clear anodized		--	
20	Casement	3'-4"	3'-6"	Aluminum	Low-E	Clear anodized		--	
21	Casement	3'-4"	5'-0"	Aluminum	Low-E	Clear anodized		--	
22	Casement	3'-0"	3'-6"	Aluminum	Low-E	Clear anodized		--	
23	--	--	--	--	--	--	--	--	
24	Fixed	6'-0"	3'-6"	Aluminum	Low-E	Clear anodized		--	
25	--	--	--	--	--	--	--	--	
26	Fixed	3'-0"	5'-6"	Aluminum	Low-E - Solarban 60	Clear anodized	SAFTI SuperLite II-XL-60	--	60 Minute Fire Rated. Tested to Fire Rated Wall Assembly requirements per ASTM E119 and NFPA 251. Window shall bear W label.
27	Fixed	6'-0"	5'-6"	Aluminum	Low-E	Clear anodized		--	
28	Fixed	6'-0"	5'-6"	Aluminum	Low-E	Clear anodized		--	
29	Casement	2'-6"	3'-6"	Aluminum	Low-E	Clear anodized		--	
30	Fixed	6'-0"	5'-6"	Aluminum	Low-E	Clear anodized		--	
31	Fixed	6'-0"	5'-6"	Aluminum	Low-E	Clear anodized		--	
32	Awning	3'-4"	2'-6"	Aluminum	Low-E	Clear anodized		--	
33	Awning	2'-6"	2'-6"	Aluminum	Low-E	Clear anodized		--	
34	Fixed	1-6"	5'-0"	Aluminum	Low-E	Clear anodized		--	
35	Fixed	6'-0"	5'-0"	Aluminum	Low-E	Clear anodized		--	
36	Casement	3'-4"	3'-6"	Aluminum	Low-E	Clear anodized		--	
37	Fixed	2'-2"	6'-6"	Aluminum	Low-E	Clear anodized		--	
38	Casement	3'-4"	3'-6"	Aluminum	Low-E	Clear anodized		--	
39	Casement	3'-4"	3'-6"	Aluminum	Low-E	Clear anodized		--	
40	Fixed	6'-0"	5'-0"	Aluminum	Low-E	Clear anodized		--	
41	Fixed	1-6"	5'-0"	Aluminum	Low-E	Clear anodized		--	
42	Casement	3'-4"	3'-6"	Aluminum	Low-E	Clear anodized		--	
43	Fixed/Casement	3'-4"	6'-6"	Aluminum	Low-E	Clear anodized		--	
44	--	--	--	--	--	--	--	--	
45	Casement	3'-4"	3'-6"	Aluminum	Low-E	Clear anodized		--	
46	Fixed	7'-6"	3'-6"	Aluminum	Low-E	Clear anodized		--	
47	--	--	--	--	--	--	--	--	
48	Casement	3'-4"	3'-6"	Aluminum	Low-E	Clear anodized		--	
49	Fixed	7'-6"	5'-0"	Aluminum	Low-E	Clear anodized		--	
50	Awning	3'-4"	3'-6"	Aluminum	Low-E	Clear anodized		--	
51	Casement	3'-4"	3'-6"	Aluminum	Low-E	Clear anodized		--	
52	--	--	--	--	--	--	--	--	
53	Fixed	6'-0"	5'-0"	Aluminum	Low-E	Clear anodized		--	
54	Fixed	6'-0"	5'-0"	Aluminum	Low-E	Clear anodized		--	
55	--	--	--	--	--	--	--	--	
56	--	--	--	--	--	--	--	--	
57	--	--	--	--	--	--	--	--	
58	Fixed	3'-0"	5'-6"	Aluminum	Low-E - Solarban 60	Clear anodized	SAFTI SuperLite II-XL-60	--	60 Minute Fire Rated. Tested to Fire Rated Wall Assembly requirements per ASTM E119 and NFPA 251. Window shall bear W label.
59	Fixed	6'-0"	5'-6"	Aluminum	Low-E	Clear anodized		--	
60	Fixed	6'-0"	5'-6"	Aluminum	Low-E	Clear anodized		--	
61	Fixed	6'-0"	2'-9"	Aluminum	Low-E	Clear anodized		--	
62	Casement	3'-0"	5'-6"	Aluminum	Low-E	Clear anodized		--	
63	Fixed	6'-0"	5'-6"	Aluminum	Low-E	Clear anodized		--	
64	Fixed/Casement	3'-4"	6'-6"	Aluminum	Low-E	Clear anodized		--	
65	Awning	3'-4"	2'-6"	Aluminum	Low-E	Clear anodized		--	
66	Awning	3'-4"	2'-6"	Aluminum	Low-E	Clear anodized		--	
67	Fixed	1-6"	5'-0"	Aluminum	Low-E	Clear anodized		--	
68	Fixed	6'-0"	5'-0"	Aluminum	Low-E	Clear anodized		--	
69	Casement	3'-4"	3'-6"	Aluminum	Low-E	Clear anodized		--	
70	Casement	3'-4"	3'-6"	Aluminum	Low-E	Clear anodized		--	
71	Fixed	6'-0"	5'-0"	Aluminum	Low-E	Clear anodized		--	
72	Fixed	1-6"	5'-0"	Aluminum	Low-E	Clear anodized		--	
73	Awning	3'-4"	2'-6"	Aluminum	Low-E	Clear anodized		--	
74	Fixed/Casement	3'-0"	6'-6"	Aluminum	Low-E	Clear anodized		--	
75	Awning	3'-4"	2'-6"	Aluminum	Low-E	Clear anodized		--	
76	Fixed/Awning	3'-4"	6'-6"	Aluminum	Low-E	Clear anodized		--	
77	--	--	--	--	--	--	--	--	
78	Awning	3'-4"	2'-6"	Aluminum	Low-E	Clear anodized		--	
79	Fixed	3'-4"	3'-6"	Aluminum	Low-E	Clear anodized		--	
80	Fixed/Awning	3'-4"	6'-6"	Aluminum	Low-E	Clear anodized		--	
81	Fixed/Casement	3'-4"	6'-6"	Aluminum	Low-E	Clear anodized		--	
82	Casement	3'-4"	3'-6"	Aluminum	Low-E	Clear anodized		--	
83	Casement	3'-4"	3'-6"	Aluminum	Low-E	Clear anodized		--	
84	Casement	3'-4"	3'-6"	Aluminum	Low-E	Clear anodized		--	
85	--	--	--	--	--	--	--	--	
86	Casement	3'-0"	3'-6"	Aluminum	Low-E	Clear anodized		--	
87	Fixed	6'-0"	5'-0"	Aluminum	Low-E	Clear anodized		--	
88	Casement	3'-4"	3'-6"	Aluminum	Low-E	Clear anodized		--	
89	--	--	--	--	--	--	--	--	
90	Casement	3'-4"	3'-6"	Aluminum	Low-E	Clear anodized		--	
91	--	--	--	--	--	--	--	--	
92	Fixed	3'-4"	5'-6"	Aluminum	Low-E	Clear anodized		--	
93	Fixed	3'-4"	5'-6"	Aluminum	Low-E	Clear anodized		--	
94	Fixed	3'-0"	5'-6"	Aluminum	Low-E	Clear anodized		--	
95	Fixed	4'-4"	5'-6"	Aluminum	Low-E	Clear anodized		--	
96	Fixed	1'-10"	5'-6"	Aluminum	Low-E	Clear anodized		--	
97	Awning	2'-6"	2'-6"	Aluminum	Low-E	Clear anodized		--	
98	Fixed	4'-4"	5'-6"	Aluminum	Low-E	Clear anodized		--	
99	Fixed	1'-10"	5'-6"	Aluminum	Low-E	Clear anodized		--	
100	Fixed	1'-10"	5'-6"	Aluminum	Low-E	Clear anodized		--	
101	Fixed	4'-4"	5'-6"	Aluminum	Low-E	Clear anodized		--	
102	Fixed	3'-4"	3'-6"	Aluminum	Low-E	Clear anodized		--	
103	Casement	3'-4"	3'-6"	Aluminum	Low-E	Clear anodized		--	
104	Fixed	6'-0"	5'-0"	Aluminum	Low-E	Clear anodized		--	
105	Casement	3'-4"	3'-6"	Aluminum	Low-E	Clear anodized		--	
106	Casement	3'-4"	3'-6"	Aluminum	Low-E	Clear anodized		--	
107	Fixed	6'-0"	5'-0"	Aluminum	Low-E	Clear anodized		--	
108	Casement	3'-4"	3'-6"	Aluminum	Low-E	Clear anodized		--	
109	Awning	3'-4"	2'-6"	Aluminum	Low-E	Clear anodized		--	
110	Awning	2'-6"	2'-6"	Aluminum	Low-E	Clear anodized		--	
111	Fixed/Casement	3'-4"	6'-6"	Aluminum	Low-E	Clear anodized		--	
112	--	--	--	--	--	--	--	--	
113	Casement	3'-4"	3'-6"	Aluminum	Low-E	Clear anodized		--	
114	Casement	1'-11"	6'-6"	Aluminum	Low-E	Clear anodized		--	
115	Fixed	7'-6"	6'-6"	Aluminum	Low-E	Clear anodized		--	
116	Fixed	6'-0"	5'-0"	Aluminum	Low-E	Clear anodized		--	
117	Fixed	2'-2"	5'-0"	Aluminum	Low-E	Clear anodized		--	
118	Fixed	6'-0"	5'-0"	Aluminum	Low-E	Clear anodized		--	
119	Casement	3'-4"	3'-6"	Aluminum	Low-E	Clear anodized		--	
120	--	--	--	--	--	--	--	--	
121	Fixed/Casement	3'-4"	6'-6"	Aluminum	Low-E	Clear anodized		--	
122	Fixed/Awning	3'-4"	6'-6"	Aluminum	Low-E	Clear anodized		--	
123	Fixed/Casement	3'-4"	6'-6"	Aluminum	Low-E	Clear anodized		--	
124	Fixed	5'-5"	5'-0"	Aluminum	Low-E	Clear anodized		--	
125	Fixed	6'-0"	5'-0"	Aluminum	Low-E	Clear anodized		--	
126	Awning	2'-6"	2'-6"	Aluminum	Low-E	Clear anodized		--	
127	Awning	2'-6"	3'-6"	Aluminum	Low-E	Clear anodized		--	
128	Awning	2'-6"	3'-6"	Aluminum	Low-E	Clear anodized		--	
129	Awning	3'-4"	2'-6"	Aluminum	Low-E	Clear anodized		--	
130	Awning	2'-6"	2'-6"	Aluminum	Low-E	Clear anodized		--	
131	Fixed	2'-6"	2'-6"	Aluminum	Low-E	Clear anodized		--	
132	Fixed	2'-6"	4'-0"	Aluminum	Low-E	Clear anodized		--	
133	Fixed	2'-6"	2'-6"	Aluminum	Low-E	Clear anodized		--	
134	Awning	2'-6"	2'-6"	Aluminum	Low-E	Clear anodized		--	
135	Awning	3'-4"	2'-6"	Aluminum	Low-E	Clear anodized		--	
136	Casement	3'-4"	3'-6"	Aluminum	Low-E	Clear anodized		--	

NOTE:
EXTERIOR DOORS AND WINDOWS SHALL COMPLY WITH THE MINIMUM SOUND ISOLATION REQUIREMENTS AS FOLLOWS

- OITC: 28
- STC: 33

TECHNE
DESIGN | DEVELOPMENT

3956 30th Street, San Diego, CA 92104
techne-us.com sustainablearchitect.org
o 619-940-5814 m 313-595-5814

CONSULTANTS

LICENSED ARCHITECT
MICHAEL RENE MORTON
C-19371
REN. 04/30/2017
STATE OF CALIFORNIA

414 29th Avenue
Oakland, CA 94601

OWNER

29th Avenue Group, LLC
1211 Embarcadero Way, Suite D
Oakland, CA 94606

BuildZig
Dream it. Build it. Zig it.

MARK	DATE	DESCRIPTION
04	04.02.15	Elevator Revision
05	04.09.15	Permit Set
06	08.19.15	Window Changes
07	10.06.15	Unit 1 Entry Door Relocation
08	10.27.15	Window Changes

10/27/2015 6:35:09 PM

PROJECT NO: 1410

CAD DWG FILE: A601 - DOOR AND WINDOW SCHEDULES.DWG

DRAWN BY: A.S, M.M., J.C., J.S.

CHK'D BY: A.S., M.M

COPYRIGHT: TECHNE expressly reserves its common law copyright and other property rights in this document. This document shall not be reproduced, copied, changed or disclosed in any form or manner whatsoever without first obtaining the express written consent of TECHNE.

SHEET TITLE

WINDOW SCHEDULE

A602 8

SHEET - OF 100

DOOR AND WINDOW NOTES

1. Refer to Window Schedule and Door and Frame Schedule for door and window sizes, hardware, finish and additional specifications.
2. This drawing includes a representation of each door and/or window type but does not show each individual door and window unit.
3. Refer to Exterior Elevations and Interior Elevations for head and sill elevations of doors and / or windows.
4. Glazed doors and windows within 18" of any walking surface shall be tempered.
5. All glazing shall be dual pane and LowE.

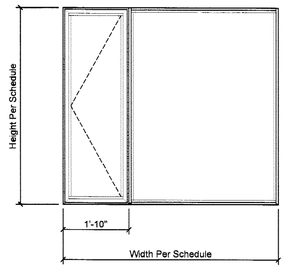

6 CASEMENT / FIXED WINDOW
1/2" = 1'-0"

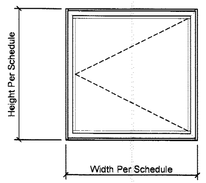

5 CASEMENT WINDOW
1/2" = 1'-0"

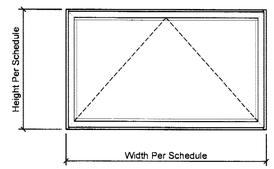

4 AWNING WINDOW
1/2" = 1'-0"

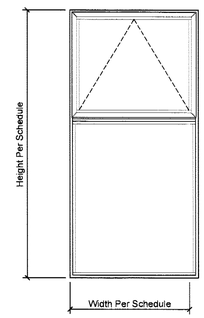

3 FIXED / AWNING WIN.
1/2" = 1'-0"

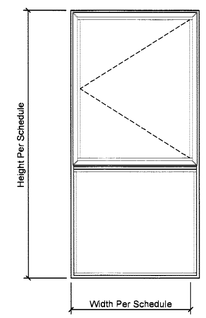

2 FIXED / CASEMENT WIN.
1/2" = 1'-0"

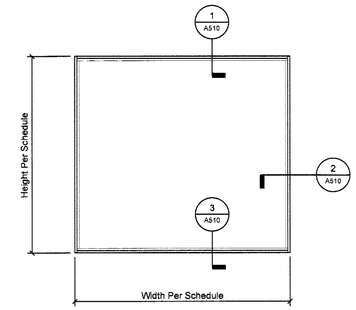

1 FIXED WINDOW
1/2" = 1'-0"

SURVEY
PLOT PLAN REVIEW
PARKING/DWY LAYOUT
GRADING AND
EROSION CONTROL
SOILS REPORT ON FILE
MECH. PLUMB
CHECKED

FIELD COPY

TECHNE
DESIGN | DEVELOPMENT
3956 30th Street, San Diego, CA 92104
techne-us.com sustainablearchitect.org
o 619-940-5814 m 313-595-5814

CONSULTANTS

LICENSED ARCHITECT
MICHAEL RENE MORTON
C-19371
REN. 04/30/2015
STATE OF CALIFORNIA

414 29th Avenue
Oakland, CA 94601

OWNER

29th Avenue Group, LLC
1211 Embarcadero Way, Suite D
Oakland, CA 94606

BuildZig
Dream it. Build it. Zig it.

MARK	DATE	DESCRIPTION
01	11.10.14	1st Building Permit Submittal
02	02.23.15	2nd Building Permit Submittal

3/24/2015 5:20:19 PM

PROJECT NO: 1410

CAD DWG FILE: A601 - DOOR AND WINDOW SCHEDULES.DWG

DRAWN BY: A.S, M.M., J.C., J.S.

CHK'D BY: A.S., M.M

COPYRIGHT: TECHNE expressly asserves its common law copyright and other property rights in this document. This document shall not be reproduced, copied, changed or disclosed in any form or manner whatsoever without first obtaining the express written consent of TECHNE.

SHEET TITLE

WINDOW TYPES

A603

SHEET - OF 100

DOOR AND WINDOW NOTES

1. Refer to Window Schedule and Door and Frame Schedule for door and window sizes, hardware, finish and additional specifications.
2. This drawing includes a representation of each door and/or window type but does not show each individual door and window unit.
3. Refer to Exterior Elevations and Interior Elevations for head and sill elevations of doors and / or windows.
4. Glazed doors and windows within 18" of any walking surface shall be tempered.
5. All glazing shall be dual pane and LowE.

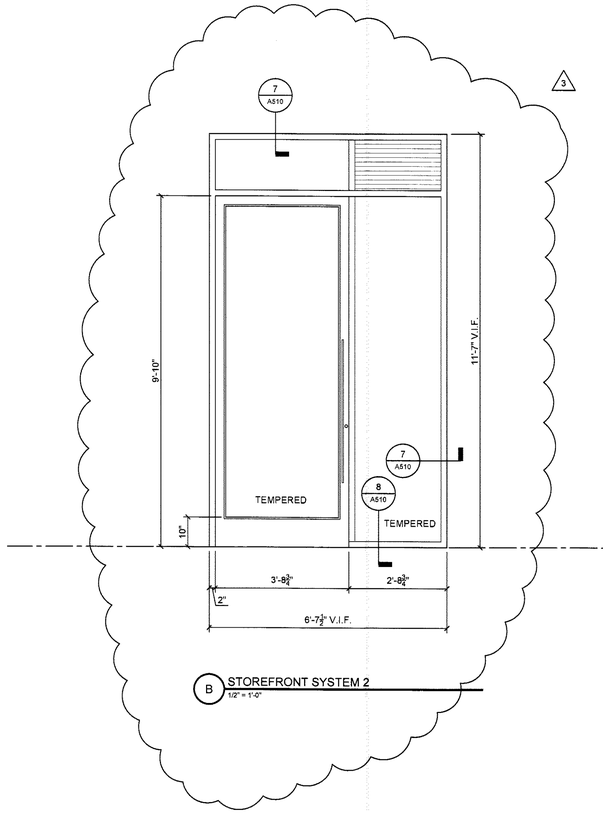

B STOREFRONT SYSTEM 2
1/2" = 1'-0"

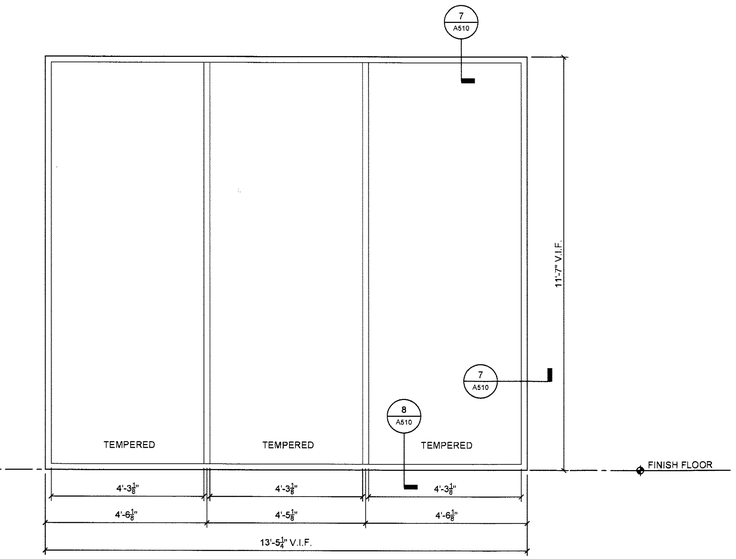

A STOREFRONT SYSTEM 1
1/2" = 1'-0"

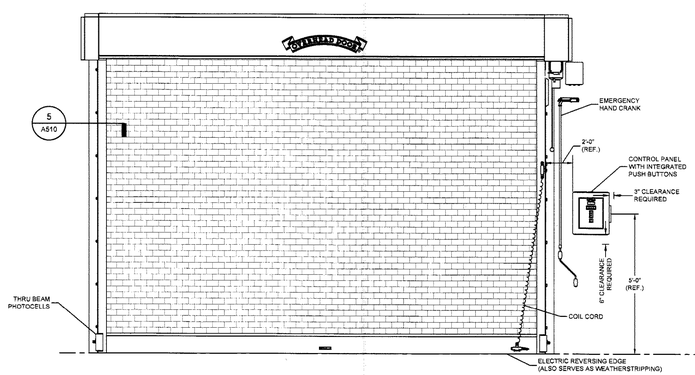

ROLLUP SECURITY GRILL

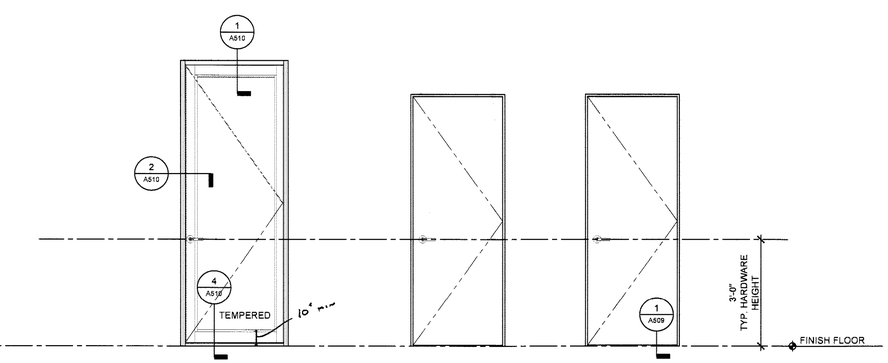

HINGED SINGLE FULLY GLAZED EXTERIOR DOOR

HINGED SINGLE INTERIOR DOOR

HINGED SINGLE FIRE RATED DOOR

FIELD COPY

TECHNE
DESIGN | DEVELOPMENT
3956 30th Street, San Diego, CA 92104
techne-us.com sustainablearchitect.org
o 619-940-5814 m 313-595-5814

CONSULTANTS

LICENSED ARCHITECT
MICHAEL RENE MORTON
C-19371
REN. 04/30/2015
STATE OF CALIFORNIA

414 29th Avenue
Oakland, CA 94601

OWNER

29th Avenue Group, LLC
1211 Embarcadero Way, Suite D
Oakland, CA 94606

BuildZig
Dream it. Build it. Zig it.

MARK	DATE	DESCRIPTION
01	11.10.14	1st Building Permit Submittal
02	02.23.15	2nd Building Permit Submittal
03	03.13.15	3rd Building Permit Submittal

3/14/2015 1:21:04 PM

PROJECT NO: 1410
CAD DWG FILE: A601 - DOOR AND WINDOW SCHEDULES.DWG
DRAWN BY: A.S, M.M., J.C., J.S.
CHK'D BY: A.S., M.M

COPYRIGHT: TECHNE expressly reserves its common law copyright and other property rights in this document. This document shall not be reproduced, copied, changed or disclosed in any form or manner whatsoever without first obtaining the express written consent of TECHNE.

SHEET TITLE

STOREFRONT SYSTEMS AND DOOR TYPES

A604

SHEET - OF 100